This is a digital copy of a book that was preserved for generations on library shelves before it was carefully scanned by Google as part of a project to make the world's books discoverable online.

It has survived long enough for the copyright to expire and the book to enter the public domain. A public domain book is one that was never subject to copyright or whose legal copyright term has expired. Whether a book is in the public domain may vary country to country. Public domain books are our gateways to the past, representing a wealth of history, culture and knowledge that's often difficult to discover.

Marks, notations and other marginalia present in the original volume will appear in this file - a reminder of this book's long journey from the publisher to a library and finally to you.

Usage guidelines

Google is proud to partner with libraries to digitize public domain materials and make them widely accessible. Public domain books belong to the public and we are merely their custodians. Nevertheless, this work is expensive, so in order to keep providing this resource, we have taken steps to prevent abuse by commercial parties, including placing technical restrictions on automated querying.

We also ask that you:

+ *Make non-commercial use of the files* We designed Google Book Search for use by individuals, and we request that you use these files for personal, non-commercial purposes.

+ *Refrain from automated querying* Do not send automated queries of any sort to Google's system: If you are conducting research on machine translation, optical character recognition or other areas where access to a large amount of text is helpful, please contact us. We encourage the use of public domain materials for these purposes and may be able to help.

+ *Maintain attribution* The Google "watermark" you see on each file is essential for informing people about this project and helping them find additional materials through Google Book Search. Please do not remove it.

+ *Keep it legal* Whatever your use, remember that you are responsible for ensuring that what you are doing is legal. Do not assume that just because we believe a book is in the public domain for users in the United States, that the work is also in the public domain for users in other countries. Whether a book is still in copyright varies from country to country, and we can't offer guidance on whether any specific use of any specific book is allowed. Please do not assume that a book's appearance in Google Book Search means it can be used in any manner anywhere in the world. Copyright infringement liability can be quite severe.

About Google Book Search

Google's mission is to organize the world's information and to make it universally accessible and useful. Google Book Search helps readers discover the world's books while helping authors and publishers reach new audiences. You can search through the full text of this book on the web at `http://books.google.com/`

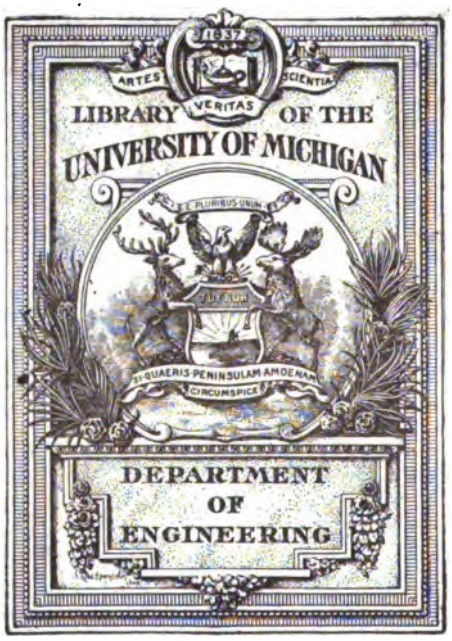
ARTES
VERITAS
SCIENTIA
LIBRARY OF THE
UNIVERSITY OF MICHIGAN
E PLURIBUS UNUM
SI QUAERIS PENINSULAM AMOENAM
CIRCUMSPICE
DEPARTMENT
OF
ENGINEERING

LIBRARY
TA
1
I615

TRANSACTIONS

OF THE

Institution of Engineers and Shipbuilders

IN SCOTLAND

(INCORPORATED).

VOLUME L.

FIFTIETH SESSION, 1906-1907.

EDITED BY THE SECRETARY.

GLASGOW:

PUBLISHED BY THE INSTITUTION AT

207 BATH STREET.

1907.

PRINTED FOR THE INSTITUTION BY
WILLIAM ASHER & CO., LTD., PRINTERS AND PUBLISHERS
164 HOWARD STREET, GLASGOW.

OFFICE-BEARERS.

FIFTIETH SESSION, 1906-1907.

President.

JAMES GILCHRIST.

Vice-Presidents.

ALEXANDER CLEGHORN.
C. P. HOGG.
ANDREW LAING.
WILLIAM MELVILLE.
JOHN WARD.
A. D. WEDGWOOD.

Councillors.

Members.

WILLIAM M. ALSTON.
WILLIAM BROWN.
D. C. HAMILTON.
J. E. HARRISON.
W. W. LACKIE.
FRED. LOBNITZ.
DAVID McGEE.
PROF. MAGNUS MACLEAN, M.A., D.Sc.
D. A. MATHESON.
R. D. MUNRO.
F. J. ROWAN.
R. H. B. THOMSON.
PETER WALLACE.
JAMES WEIR.
ALEXANDER WILSON.

Associates.

JAMES DONALD.
J. B. HENDERSON.
W. A. KINGHORN.

Finance Committee.

THOMAS KENNEDY, *Convener.*
J. E. HARRISON.
C. P. HOGG.
ANDREW LAING.
DAVID McGEE.
PETER WALLACE.
JAMES WEIR.

Library Committee.

ALEXANDER CLEGHORN, *Convener.*
WILLIAM M. ALSTON.
WILLIAM BROWN.
D. C. HAMILTON.
W. W. LACKIE.
PROF. MAGNUS MACLEAN, M.A., D.Sc.
D. A. MATHESON.
JOHN WARD.

Committee on Papers.

PROF. MAGNUS MACLEAN, M.A., D.Sc., *Convener.*
WILLIAM M. ALSTON.
W. W. LACKIE.
R. D. MUNRO.
R. H. B. THOMSON.
A. D. WEDGWOOD.
ALEXANDER WILSON.

Honorary Councillors—Past Presidents.

JOHN INGLIS, LL.D.
SIR WILLIAM ARROL, LL.D.
GEORGE RUSSELL.
ROBERT CAIRD, LL.D.
ARCHIBALD DENNY.

Representatives on the Board of Trade Consultative Committee.

JOHN DUNCAN. E. HALL-BROWN. FRED. LOBNITZ. GEORGE McFARLANE.

Representatives on Lloyd's Technical Committee.

THOMAS BELL.
JAMES GILCHRIST.
RICHARD RAMAGE.
JOHN WARD.

Representative on the Board of Governors of the Glasgow School of Art.

JAMES MOLLISON.

Representative on the Board of Governors of the Glasgow and West of Scotland Technical College. A. S. BIGGART.

Honorary Treasurer—THOMAS KENNEDY, Messrs. Glenfield & Kennedy, Ltd., Kilmarnock.

Secretary and Editor of Transactions—EDWARD H. PARKER.
Institution Rooms, 207 Bath Street.

Curator and Sub-Librarian—FRANCIS MARTIN, Institution Rooms, 207 Bath Street.

177254

PRESIDENTS OF THE INSTITUTION

SINCE FOUNDATION IN 1857.

1857-59 WILLIAM JOHN MACQUORN RANKINE, C.E., LL.D., F.R.SS.L. & E., Professor of Civil Engineering and Mechanics, Glasgow University.

1859-61 WALTER MONTGOMERIE NEILSON, Hyde Park Locomotive Works, Glasgow.

1861-63 WILLIAM JOHNSTONE, C.E., Resident Engineer, Glasgow & South-Western Railway, Glasgow.

1863-65 JAMES ROBERT NAPIER, Engineer and Shipbuilder, Glasgow.

1865-67 JAMES GRAY LAWRIE, Engineer and Shipbuilder, Glasgow.

1867-69 JAMES MORRIS GALE, C.E., Engineer, Glasgow Corporation Water Works.

1869-70 WILLIAM JOHN MACQUORN RANKINE, C.E., LL.D., F.R.SS.L. & E., Professor of Civil Engineering and Mechanics, Glasgow University.

1870-72 DAVID ROWAN, Marine Engineer, Glasgow.

1872-74 ROBERT DUNCAN, Shipbuilder, Port-Glasgow.

1874-76 HAZELTON ROBSON ROBSON, Marine Engineer, Glasgow.

1876-78 ROBERT BRUCE BELL, Civil Engineer, Glasgow.

1878-80 ROBERT MANSEL, Shipbuilder, Glasgow.

1880-82 JOHN LENNOX KINCAID JAMIESON, Marine Engineer, Glasgow.

1882-84 JAMES REID, Hyde Park Locomotive Works, Glasgow.

1884-86 JAMES THOMSON, LL.D., F.R.S., Professor of Civil Engineering and Mechanics, Glasgow University.

1886-87 WILLIAM DENNY, Shipbuilder, Dumbarton.

1887-89 ALEXANDER CARNEGIE KIRK, LL.D., Marine Engineer, Glasgow.

1889-91 EBENEZER KEMP, Marine Engineer, Glasgow.

1891-93 ROBERT DUNDAS, C.E., Resident Engineer, Southern Division, Caledonian Railway, Glasgow.

1893-95 JOHN INGLIS, LL.D., Engineer and Shipbuilder, Glasgow.

1895-97 SIR WILLIAM ARROL, LL.D., M.P., Engineer and Bridge Builder, Glasgow.

1897-99 GEORGE RUSSELL, Mechanical Engineer, Motherwell.

1899-01 ROBERT CAIRD, LL.D., F.R.S.E., Shipbuilder, Greenock.

1901-03 WILLIAM FOULIS, Engineer, Glasgow Corporation Gas Works.

1903-05 ARCHIBALD DENNY, Shipbuilder, Dumbarton.

1905-07 JAMES GILCHRIST, Marine Engineer, Glasgow.

Elected 23rd April, 1907, JOHN WARD, Shipbuilder, Dumbarton.

CONTENTS.

	PAGE
Office-Bearers, ...	iii
Presidents of the Institution, ...	iv
Memorandum and Articles of Association, ...	ix
President's Address, ...	1

PAPERS READ.

The Development and Present Status of the Steam Turbine in Land and Marine Work—by Mr E. M. Speakman, ...	12
Suction Gas Engines and Gas Plants—by Mr Hugh Campbell, ...	82
The Stability of Submarines - by Mr J. G. Johnstone, B.Sc., ...	164
The Mechanism of Power Transmission from Electric Motors—by Mr Wilfrid L. Spence, ...	197
The Most Economical Mean Effective pressure for Steam Engines —by Mr R. Royds, M.Sc., ...	278
Tramway and Railway Electric Traction—by Mr George G. Braid,	333
Some Details of Albion Motor Cars—by Mr T. Blackwood Murray, B.Sc.,	362

"James Watt" Anniversary Dinner, ...	380
Smoking Concert, ...	386
Conversazione and Exhibition, ...	386
Laying Memorial Stone of New Buildings, ...	387
Minutes of Proceedings, ...	391
Report of the Council, ...	404
Treasurer's Statement, ...	414
Report of the Library Committee, ...	418
Obituary, ...	428
List of Members, ...	450
Index, ...	509

PLATES.

The Development and Present Status of the Steam Turbine in Land and Marine Work, ... I., II., III., IV., V.
Suction Gas Engines and Gas Plants, ... VI., VII., VIII.
The Stability of Submarines, ... IX., X., XI.
The Most Economical Mean Effective Pressure for Steam Engines, ... XII., XIII., XIV., XV.
Tramway and Railway Electric Traction, ...XVI., XVII., XVIII.
Some Details of Albion Motor Cars, ... XIX., XX.

PREMIUMS AWARDED

FOR

PAPERS READ DURING SESSION 1905-1906.

PREMIUMS OF BOOKS.

1.—To Mr E. M. SPEAKMAN, for his paper on "The Determination of the Principal Dimensions of the Steam Turbine, with Special Reference to Marine Work."

2.—Mr H. NORMAN LEASK, for his paper on "Refuse Destructors."

ADVERTISEMENT.

The responsibility of the statements and opinions given in the following Papers and Discussions rests with the individual authors; the Institution, as a body, merely places them on record.

MEMORANDUM OF ASSOCIATION

OF THE

INSTITUTION OF ENGINEERS AND SHIPBUILDERS IN SCOTLAND.

---

1. The Name of the Association is "THE INSTITUTION OF ENGINEERS AND SHIPBUILDERS IN SCOTLAND."

2. The Registered Office of the Association will be situate in Scotland.

3 The Objects for which the Association is established are :—

(1.) The Incorporation of the present Institution of Engineers and Shipbuilders in Scotland, under the 30th and 31st Victoria, cap. cxxxi., and

(2.) To facilitate the exchange of information and ideas amongst its Members, to place on record the results of experience elicited in discussion, and to promote the advancement of science and practice in Engineering and Shipbuilding.

(3.) The doing all such other lawful things as are incidental or conducive to the attainments of the above objects.

4. The Income and Property of the Association, whencesoever derived, shall be applied solely towards the promotion of the objects of the Association as set forth in this Memorandum of Association, and no portion thereof shall be paid or transferred directly or indirectly by way of dividend, bonus, or otherwise howsoever, by way of profit, to the persons who at any time are or have been Members of the Association, or to any of them, or to any person claiming through any of them.

Provided that nothing herein shall prevent the payment in good faith of remuneration to any Officers or Servants of the Association, or to any Member of the Association, or other person, in return for any services rendered to the Association.

5. The fourth paragraph of this Memorandum is a condition on which a Licence is granted by the Board of Trade to the Association, in pursuance of Section 23 of the "Companies Act, 1867." For the purpose of preventing any evasion of the terms of the said fourth paragraph, the Board of Trade may from time to time, on the application of any Member of the Association, impose further conditions, which may be duly observed by the Association.

6. If the Association acts in contravention of the fourth paragraph of this Memorandum, or of any such further Conditions, the liability of every Member of the Council of the Association, and also of every Member who has received any such dividend, bonus, or other profit as aforesaid, shall be unlimited.

7. Every Member of the Association undertakes to contribute to the Assets of the Association—in the event of the same being wound up during the time that he is a Member, or within one year afterwards, for payment of the Debts and Liabilities of the Association, contracted before the time at which he ceases to be a Member, and of the Costs, Charges, and Expenses of winding up the same, and for the adjustment of the rights of the Contributaries among themselves—such amount as may be required, not exceeding Ten Pounds, or, in case of his liability becoming unlimited, such other amount as may be required in pursuance of the last preceding paragraph of this Memorandum.

WE. the several persons whose names and addresses are subscribed, are desirous of being formed into an Association in pursuance of this Memorandum of Association :—

Names, Addresses, and Description of Subscribers—

DAVID ROWAN, 217 Elliot Street, Glasgow, Engineer.
W. J. MACQUORN RANKINE, C.E., LL.D., &c., 59 St. Vincent St., Glasgow.
M. R. COSTELLOE, 26 Granville Street, Glasgow, Measuring Surveyor.
BENJAMIN CONNOR, 17 Scott Street, Garnethill, Engineer.
JAMES DEAS, 16 Robertson Street, Glasgow, Civil Engineer.
JAMES M. GALE, 23 Miller Street, Glasgow, Civil Engineer.
W. MONTGOMERIE NEILSON, C.E., Hyde Park Locomotive Works, Glasgow.

Dated the Twelfth day of July, Eighteen Hundred and Seventy-One.

ROBERT ROSS, of Glasgow, Solicitor, Witness to the above signatures.

NOTE.—By Special Resolution passed on 2nd October, 1902, and confirmed on 20th October, 1902, the Articles of Association dated 12th July, 1871, as modified and altered in 1873 and 1880, were annulled, and the following Articles of Association (with the exception of Articles Nos. 23, 25, and 27) were substituted, and they were registered with the Registrar of Joint Stock Companies on 28th October, 1902.

By Special Resolution passed on 20th March, 1906, and confirmed on 17th April, 1906, the Articles Nos. 23, 25, and 27 of the Articles registered on 28th October, 1902, were cancelled, and the Articles Nos. 23, 25, and 27 below were substituted. This Resolution was lodged with the Registrar of Joint Stock Companies on 28th April, 1906.

ARTICLES OF ASSOCIATION

OF THE

INSTITUTION OF ENGINEERS AND SHIPBUILDERS IN SCOTLAND.

SECTION I.—PRELIMINARY

1. For the purpose of registration, the number of Members of the Institution is declared unlimited.

2. These Articles shall be construed with reference to the provisions of the Companies Acts, 1862 to 1900; and terms used in these Articles shall be taken as having the same respective meanings as they have when used in those Acts.

3. The Objects of the Institution are those set forth in the Memorandum of Association. Objects of the Institution.

SECTION II.—CONSTITUTION.

4. The Institution shall consist of Members, Associate Members, Associates, Students, and Honorary Members. Constitution.

5. Candidates for admission as Members shall be persons not under 25 years of age, who have been educated as Engineers or Shipbuilders and have occupied a responsible position in connection with the Practice or Science of Engineering or Shipbuilding. Who may be Members.

6. Candidates for admission as Associate Members shall be persons not under 22 years of age, who have Who may be Associate Members.

been educated as Engineers or Shipbuilders and are engaged in the Practice or Science of Engineering or Shipbuilding.

Who may be Associates.

7. Candidates for admission as Associates shall be such persons, not included in the classes enumerated in the two preceding Articles, who, not being under 25 years of age, are considered by the Council eligible on account of their scientific attainments, or are considered by the Council qualified by knowledge bearing on Engineering Science or Practice.

Who may be Students.

8. Candidates for admission as Students shall be persons not under 18 years of age who are engaged in study or employment with a view to qualifying themselves as Engineers or Shipbuilders. Before attaining the age of 25 years they must apply for election as Members or Associate Members if they desire to remain connected with the Institution. They may not continue to be Students after attaining the age of 25 years.

Who may be Hon. Members.

9. Honorary Members shall be such distinguished persons as the Council shall recommend and the Institution shall appoint. The number of Honorary Members shall not exceed Twelve.

Members, etc., under former Articles of Association.

10. All persons whose names shall on 30th April, 1902, be on the Roll of the Institution under the former Articles of Association as Members, Associates, or Honorary Members, and whose Subscriptions are not more than two years in arrear at that date, shall become Members, Associates and Honorary Members respectively within the meaning of these Articles, and that without procedure of any kind on the part of such persons.

Graduates under former Articles of Association.

11. All persons whose names shall on 30th April, 1902, be on the Roll of the Institution under the former Articles of Association as Graduates, and whose Subscriptions are not more than two years in arrear at that date, shall be considered and treated as Students within the meaning of these Articles, and shall have the privileges, and be subject to the regulations affecting Students;

and, notwithstanding the terms of Article 8 hereof, such Graduates as are over 25 years of age shall be allowed to remain as Students for one year from and after 30th April, 1902, but no longer.

Abbreviated Titles of Members, etc.

12. The abbreviated distinctive titles for indicating the connection with the Institution shall be the following, viz.—For Members, M.I.E.S.; for Associate Members, A.M.I.E.S.; for Associates, A.I.E.S.; for Students, S.I.E.S.; and for Honorary Members, HON. M.I.E.S.

Candidates, how recommended and elected.

13. Every Candidate for admission as a Member, Associate Member, Associate or Student of the Institution, shall obtain the recommendation of at least three Members, such recommendation and the relative undertaking by the candidate being according to Form A contained in the Appendix. Such recommendation and undertaking shall be lodged with the Secretary, and the Council shall consider the same at their first Meeting thereafter, and if they approve the recommendation shall be mentioned in the notice calling the next general meeting of the Institution; and then, unless a ballot be demanded by at least five persons entitled to vote, the Candidate shall be declared elected. If a ballot be taken he shall be admitted if three-fifths of the votes are favourable; Members only being entitled to vote. The proposal for transferring any person from the Class of Students to the Classes of Associate Members or Members, or from the Class of Associate Members to the Class of Members, shall be according to Form B contained in the Appendix, and this form shall be subscribed by at least three Members and delivered to the Secretary for the consideration of the Council who shall, if they think fit, make the proposed transfer.

Honorary Members, how elected.

14. The granting of Honorary Membership to any person may be proposed at any Council meeting, and, if the Council, after consideration at their next meeting, approve of the proposal, intimation thereof shall be given by the Secretary in the circular calling the next general meeting of the Institution. At that

meeting unless a ballot be demanded by at least five persons entitled to vote, the person proposed shall be declared elected. If a ballot be taken then the person proposed shall be admitted if four-fifths of the votes are favourable; Members only being entitled to vote.

Members, &c. formally admitted.

15. Every person duly elected or admitted as a Member, Associate Member, Associate, Student, or Honorary Member, shall be notified in writing of his election or admission by the Secretary. At the first meeting of the Institution held thereafter at which he is present, he shall be introduced according to the ensuing form, viz. —The President or the Chairman of the Meeting, addressing him by name, shall say: "As President (or Chairman of this meeting) of the Institution of Engineers and Shipbuilders in Scotland, I introduce you as a Member (or Associate Member or Associate or Student or Honorary Member as the case may be). Thereafter the new Member, Associate Member, Associate, Student or Honorary Member shall sign the Roll of Members, etc., to be kept by the Secretary, and on making payment of any fees or subscriptions due he shall be entitled to receive a diploma. The diploma shall be signed by the President and the Secretary.

Diploma.

Rejected candidates not to be noticed in minutes—wish of Honorary Members to be obtained before being balloted for.

16. If any person proposed for admission into the Institution be not approved by the Council, or be rejected on being balloted for, no notice shall be taken of the proposal in the Minutes of the General Meetings, and such person shall not be proposed again for admission until after the expiry of one year from the date of such disapproval or rejection. Before the meeting of Council for considering any proposal to grant Honorary Membership it shall be ascertained from any person proposed to be made an Honorary Member, whether he will accept the honour, no notice being taken of the proposal in the Minutes unless he is elected

Section III.—MANAGEMENT AND OFFICE-BEARERS.

Council, Management by.

17. The Direction and Management of the affairs of the Institution shall be confided to a Council, which shall consist of a President, six Vice-Presidents, and eighteen Councillors. Of the eighteen Councillors, not more than three may be Associates, the remainder being Members. Five Members of Council shall constitute a Quorum.

Constitution of Council—Five a Quorum.

Who may be President.

18. Members only shall be eligible for election as President. The President shall preside over all meetings of the Institution and Council at which he is present, and shall regulate and keep order in the proceedings. The President shall hold office for one year only, but shall be eligible for re-election at the expiry of the year.

Who may be Vice-Presidents.

19. Members only shall be eligible for election as Vice-Presidents. In the absence of the President, the Vice-Presidents in rotation shall preside at meetings of the Council and Institution. The Vice-Presidents shall hold office for three years.

Chairman to have casting vote.

20. In case of the absence of the President and all the Vice-Presidents, the meeting may elect any one of the Council, or any Member, to preside. In all cases the Chairman of any meeting shall have a Deliberative Vote and a Casting Vote.

Who may be Councillors.

21. Members and Associates only shall be eligible for election as Ordinary Members of Council, and shall hold office for three years, and not more than three Associates shall hold office in the Council at any one time.

22. Past Presidents of the Institution shall be *ex officio* Honorary Members of Council.

First Council.

23. The Office-Bearers in office at 30th April, 1902, shall continue in office till the First General Meeting of the Institution in October, 1902, when a new Council shall be elected in terms of these Articles. Such Office-

Bearers shall be eligible for election for the new Council. Of the new Council, two Vice-Presidents shall retire in October of each of the years, 1903, 1904, and 1905, their places being filled by election, and the persons elected shall hold office until the expiry of the terms of office. Similarly of the new Council, six Councillors (being five Members and one Associate) shall retire in October, 1903, and a like number in October, 1904, and the remainder in October, 1905, their places being filled by election at these dates respectively, and their successors retiring at the expiry of the terms of office, and so on thereafter from year to year. The Vice-Presidents to retire in October, 1903, and 1904, shall be determined by lot among the six Vice-Presidents first elected, and the Members of Council to retire in October, 1903 and 1904 shall be determined by lot among the Members of the Council first elected. The Vice-Presidents and the Ordinary Members of Council who fall to retire at the dates mentioned, or who fall to retire at any time on the expiry of their term of office, shall not be eligible for re-election in the same capacity, nor shall a retiring Vice-President be eligible for election as a Member of Council until one year has elapsed from the date of retiral.

Retiral of Members of Council.

Office-Bearers to to be elected by Ballot.

24. The Members of Council shall be elected by ballot at the Annual General Meeting, such meeting being the last Ordinary Meeting held in each month of April, but the new Office-Bearers elected at this meeting shall not enter office until 1st October following. In the election of President, Vice-Presidents, and Ordinary Members of Council from the Class of Associates, all Members, Associate Members, and Associates shall be entitled to vote. In the election of the other Members of Council only Members and Associate Members shall be entitled to vote.

Lists for Election.

25. In March of each year the Council shall meet and prepare a list of names for the election of Council for the ensuing year. This list shall be submitted to the

Members at the Monthly Meeting preceding the Annual Meeting, and the Members present may by motion, duly seconded, propose any additional names for any of the offices.

Ballot Lists to be sent to Members.

26. Fourteen days before the General Meeting in April of each year the list as proposed by the Council for the election of Members and others to fill the vacancies in the Council for the ensuing year, with such additions as may have been made thereto under Article 25, shall be printed and sent to all Members, and Associate Members, and the list shall serve as a ballot paper. A similar list shall be printed and sent to all Associates containing the names of those for whom they are entitled to vote. Those persons entitled to vote may vote for as many names on the list as there are vacancies to be filled. In the event of any ballot paper not containing names equal to the number of vacancies to be filled such ballot paper shall be treated as a spoiled paper.

The ballot papers may be sent by post or otherwise to the Secretary so as to reach him before the day and hour named for the Annual General Meeting, or they may be presented personally by those entitled to vote, at the opening of the Meeting.

Vacancies occurring during the Session to be filled up by the Council.

27. A vacancy occurring during any Session in consequence of the resignation or death of any Office-Bearer (except the President) shall be filled up by the Council, until the next Annual General Meeting for electing Office-Bearers. Any vacancy in the office of President shall be filled up at the next General Meeting of the Institution. A person elected to fill a vacancy shall hold office for the period unexpired of the term of office of the Office-Bearer resigning or dying or being removed from office, and he shall not be eligible for re-election.

SECTION IV.—POWERS AND DUTIES OF COUNCIL.

Meetings of Council.

28. The Council shall meet as often as the business of the Institution requires, and during each Session—that is from October till April—the Council shall meet at least once a month.

Committees.

29. The Council may delegate any of their powers to Committees consisting of such Members of the Council as they think fit, and they may appoint Committees to report to them upon special subjects. In particular, they shall appoint a Finance Committee to superintend the finances of the Institution, a Library Committee to superintend Library arrangements, and a Papers Committee to arrange for papers being submitted at meetings of the Institution. The Minutes of all Committees shall not take effect until approved by the Council. The President shall be *ex officio* a member of all Committees.

Honorary Treasurer.

The Convener of the Finance Committee shall be styled Honorary Treasurer. He shall be elected by the Council from their number, and notwithstanding the provision for retiral in Article 23, he shall be entitled to retain the office of Honorary Treasurer for three years from the date of his appointment.

Bye-Laws, etc.

30. The Council may make Bye-Laws and Regulations for carrying on the business of the Institution, and from time to time, alter, amend, repeal, vary, or add to the same; but any Bye-Law or Regulation, or any alteration or amendment thereon, or addition thereto, shall only come into force after the same has been confirmed at a General Meeting of the Institution, and no Bye-Law or Regulation shall be made under the foregoing which would amount to such an addition to or alteration of these Articles as would only be legally made by a Special Resolution passed and confirmed in accordance with Sections 50 and 51 of the Companies Act, 1862. The Council shall

Investments

be entitled to invest the Funds of the Institution as they think fit, on such security, heritable or moveable, as to

them shall seem proper, and may alter or vary the investments from time to time. The Council may purchase or sell property, heritable or moveable, for the use of the Institution, and may borrow money on the security of the property of the Institution, subject to confirmation by the Institution at an Extraordinary Meeting called for the purpose.

Council may purchase or sell.

Borrowing.

31. The Council shall appoint a Secretary and a Treasurer, and any other official or servant required to carry on the work of the Institution, and the appointments made by the Council shall be on such terms and conditions as the Council may think fit.

Officials to be appointed.

32. All questions in or before the Council shall be decided by vote, and such vote shall be taken by a show of hands or by ballot; but at the desire of any four Members present the determination of any subject shall be postponed till the next meeting of Council.

Votes at Council Meetings.

Section V.—SECRETARY AND TREASURER.

33. Subject to regulation by the Council, the Secretary (who may also act as Treasurer) shall conduct the correspondence of the Institution; attend all Meetings of the Institution, of the Council, and of Committees; take Minutes of the proceedings of such Meetings, and enter them in the proper books provided for the purpose; read at all Meetings of the Institution and Council respectively the Minute of the preceding Meeting, and all communications received by him or ordered to be read; superintend the publication of such papers as the Council may direct; take charge of the Library; issue notices of Meetings; issue Diplomas; keep the Roll and Registers; and perform whatever other duties are indicated in the Regulations of the Institution as appertaining to his department or set forth in the terms of his appointment.

Duties of Secretary.

34. Subject to regulation by the Council, the duties of the Treasurer shall be to take charge of the property

Duties of Treasurer.

of the Institution (excepting books, papers, drawings, models, and specimens of materials, which shall be in the charge of the Secretary); to receive all payments and subscriptions due to the Institution; to direct the collection of subscriptions; to pay into one of the Glasgow Banks, in the joint names of the President, Honorary Treasurer, and himself, the cash in his hands whenever it shall amount to Ten Pounds; to pay all sums due by the Institution, but not without an order signed by two Members of the Finance Committee, and to keep an account of all his intromissions in the General Cash Book of the Institution, which shall upon all occasions be open to inspection of the Finance Committee, and which shall be balanced annually, as at 30th September. The Treasurer shall prepare an Annual Statement of the Funds of the Institution, and of the receipts and payments of each financial year, which shall be audited by the Auditor aftermentioned, and this Statement of the Funds and an Inventory of all the property possessed by the Institution, and a List of the Members, Associate Members, Associates, and Students, whose subscriptions are in arrear, shall be submitted to the First Meeting of the Council, in October.

Annual Report.

35. An Annual report upon the affairs of the Institution shall be drawn up under the direction of the Council at a meeting to be held not less than ten days before the General Meeting of the Institution in October. This report shall embody reports from the representatives elected by the Council to various official bodies.

SECTION VI.—AUDIT OF ACCOUNTS.

Auditor and duties.

36. An Auditor, who must be a Chartered Accountant of at least five years standing, shall be appointed by the Council at their meeting preceding the last General Meeting of each Session, to examine the accounts and books of the Treasurer, and the Annual Financial Statement or Statements of the Funds, and that State-

ment along with the Audit and Annual Report, shall be printed in the notice calling the First General Meeting of the Institution in October, and shall be read at that meeting.

SECTION VII.—MEETINGS AND PROCEEDINGS OF THE INSTITUTION.

Ordinary General Meetings every four weeks during the Session.

37. The Institution shall hold ordinary meetings for reading papers, and for discussing matters connected with the objects of the Institution; and such meetings shall take place regularly, at least once in every four weeks during each Session; and may be adjourned from time to time. The Sessions shall commence in October, and continue until the month of April next following, inclusive. No business shall be transacted at any Meeting, unless 25 Members shall be present.

At the General Meeting in April of each year for the election of Office-Bearers, the order of business shall be:—

(1) Minutes of last meeting.

(2) To read and consider the reports of the Council and Treasurer.

(3) The meeting shall nominate two Scrutineers who shall be members, and shall hand to them the ballot-box containing the voting papers for the new Office-Bearers.

(4) The Scrutineers shall receive all ballot papers which may have reached the Secretary, and all others which may be presented at the Meeting. The Scrutineers shall then retire and verify the lists and count the votes, and shall, before the close of the meeting, report to the Chairman the names which have obtained the greatest number of votes subject to the conditions of the ballot. The Chairman shall then read the list presented by the Scrutineers, and shall declare the gentlemen named in the list to be duly elected, provided always that the list does

not contain more names than there are vacancies to be filled.

Ordinary Meetings—order of business.

38. At every ordinary meeting of the Institution, the Secretary shall first read the minutes of the preceding meeting, which, on approval, shall then be signed by the Chairman of the meeting at which the minutes are read and approved. The Secretary shall next read any notices which may have to be brought before the meeting; after which any Candidates for admission may, if necessary, be balloted for, and any new Members shall be admitted. Any business of the Institution shall then be disposed of, after which notices of motion may be given. The paper or papers for the evening shall then be read and discussed. Each Member shall have the privilege of introducing one friend to the General Meetings, whose name must be written in the Visitors' Book together with that of the Member introducing him; but if the introducing Member be unable to attend the Meeting he may send with the visitor a card signed by him addressed to the Secretary. During such portions of any of these Meetings as may be devoted to any business connected with the management of the Institution, visitors may be requested by the Chairman to withdraw.

Nature of papers to be read.

39. All papers read at the meetings of the Institution must be connected with the Science or Practice of Engineering or Shipbuilding, and must be accepted by the Papers' Committee before being read.

Proceedings to be published.

40. The papers read, and the discussions held during each Session, or such portion of them as the Council shall select, shall be printed and published forthwith.

Explanatory notes after reading of papers may be published.

41. Explanatory notes communicated after the reading or discussing of papers may be printed in the *Transactions*, if the Council see fit.

Copyright of papers shall be the property of the Institution.

42. The copyright of any paper read at a meeting of the Institution, with its illustrations, shall be the exclusive property of the Institution, unless the publication thereof by the Institution is delayed beyond the commencement

of the Session immediately following that during which it is read; in which case the copyright shall revert to the author of the paper. The Council shall have power, however, to make any arrangement they think proper with an author on first accepting his paper.

Members, &c., to receive copies of *Transactions*—Authors 30 copies of their papers.

43. The printed *Transactions* of each Session of the Institution shall be distributed gratuitously, as soon as ready, to those who shall have been Members, Associate Members, Associates, or Honorary Members of the Institution during such Session, and they shall be sold to the public at such prices as the Council shall fix. Authors of papers shall be entitled to thirty separate copies of their papers, with the discussions, as printed in the *Transactions*.

Special Meeting may be called by the Council, or on requisition by 25 Members.

44. Extraordinary or Special Meetings may be called by the Council when they consider it proper or necessary, and must be called by them on receipt of a requisition from any 25 Members, specifying the business to be brought before such meeting.

Voting.

45. Any question which, in the opinion of the President or the Chairman of the meeting of Council and Institution, is of a personal nature, shall be decided by ballot; all other questions shall be decided by a show of hands, or by any convenient system of open voting.

Who may Vote.

In all cases, not hereinbefore provided for, only Members, Associate Members, and Associates, shall be entitled to vote. Every Member, Associate Member, and Associate, shall have one vote only, which must be given personally.

Section VIII.—SUBSCRIPTIONS OF MEMBERS AND OTHERS.

Annual Subscription payable.

46. Each Member shall, on election, pay an entrance fee of £1, and for the current and for each Session thereafter an annual Subscription of £2.

Each Associate Member shall, on election, pay an entrance fee of £1, and for the current Session and each

of the two following Sessions an Annual Subscription of £1, and thereafter an Annual Subscription of £1 10s.

Each Associate shall, on election, pay an entrance fee of £1, and for the current Session and each Session thereafter an Annual Subscription of £1 10s.

Each Student shall pay an Annual Subscription of Ten Shillings, but no entrance fee.

In the case of Members, Associate Members, Associates, and Students, elected during March and April no subscription shall be payable for the current Session.

47. Honorary Members shall be liable for no contribution or subscription or entrance fee.

48. The Liability of any Member or Associate for future Annual Subscriptions may be commuted by the following payments, viz., in the case of a Member, by the payment of £25; and in the case of an Associate, by the payment of £20 and, in the event of such payment being made by a Member or Associate on his admission to the Institution, the same shall be in full of Entry Money as well as future Annual Subscriptions.

49. All persons transferred, in terms of Articles 10 and 11, to the Roll of Members, Associates, or Students, to be kept under these Articles, shall not be liable to pay any entrance fee, but for the Session, 1902-3, and thereafter they shall be liable for the Annual Subscription applicable to the Class to which they are transferred. All persons who, as Members or Associates under the former Articles of Association, had commuted their Annual Subscriptions by a capital payment to the Institution shall not be liable for any subscription, notwithstanding the terms of this Article.

When Annual Subscriptions due.

50. Annual Subscriptions shall become due on the first day of October in each year, and must be paid before 1st January following.

Members, etc., not entitled to vote if in arrear.

51. No Member or Associate Member or Associate, whose subscription is in arrear, shall be entitled to vote at any meeting of the Institution nor to receive copies

of papers or proceedings while the subscription remains unpaid.

52. Any Member, Associate Member, Associate or Student, whose subscription is more than three months in arrear shall be notified by the Secretary. Should his subscription become six months in arrear he shall be again notified by the Secretary and all his rights in connection with the Institution shall be suspended. Should his subscription become one year in arrear he shall be removed from the roll of the Institution unless the Council may deem it expedient to extend the time for payment.

Members, etc., retiring from the Institution.

53. Any Member, Associate Member, Associate, or Student retiring from the Institution, shall continue to be liable for annual subscriptions until he shall have given formal notice of his retirement to the Secretary. Contributions payable by Members, Associate Members, Associates or Students, shall be debts due to the Institution, and may be recovered by the Treasurer.

Remission of Subscription in certain cases.

54. In the case of any Member or Associate who has been long distinguished in his professional career, but who, from ill health, advanced age, or other sufficient cause, does not continue to carry on a lucrative practice, the Council, if they think fit, may remit the annual subscription of such Member or Associate, and they may remit any arrears due by him. Any such case must be considered and reported upon to the Council by a Committee appointed by the Council for the purpose.

Council may refuse to receive subscriptions in certain cases.

55. The Council may refuse to continue to receive the subscription of any person who shall have wilfully acted in contravention of the regulations of the Institution, or who shall, in the opinion of the Council, have been guilty of such conduct as shall have rendered him unfit to continue to belong to the Institution, and may remove his name from the Register, and he shall thereupon cease to be a Member, Associate Member, Associate or Student (as the case may be) of the Institution.

Section IX.—GENERAL POWERS AND PROVISIONS.

Powers of Institution in General Meeting.

56. Any Extraordinary or Special Meeting of the Institution, duly called, shall have power, by a majority in number of the persons present thereat entitled to vote, from time to time, to review the decisions or determinations of the Council; to remove Members of Council; to expel Members, Associate Members, Associates, Students, or Honorary Members, from the Institution, and to expunge their names from the Roll; and to delegate to the Council all such further powers as may be considered necessary for efficiently performing the business of the Institution. At any Extraordinary or Special Meeting 50 Members shall be a quorum.

To delegate powers to Council.

Common Seal.

57. The Institution shall have a common seal, which will be under the charge of such of the Office-Bearers as the Council may appoint, and all instruments bearing the seal shall be countersigned as the Council shall direct.

Section X.—NOTICES.

Notices.

58. Notices requiring to be served by the Institution upon its Members, Associate Members, Associates, Students, or Honorary Life Members, may be served either personally, or by leaving the same, or by sending them through the post; and notices so posted shall be deemed to have been duly served. No Members, Associate Members, Associates, Students, or Honorary Life Members, who have not a registered address within the United Kingdom, shall be entitled to any notice; and all proceedings may be had and taken without notice to any such.

Induciæ of Notices.

59. Notices for any General or Extraordinary or Special Meeting of the Institution must be given by the Secretary to all Members, Associate Members, Associates, or Honorary Life Members, at least four days before such meeting. Notices of any adjourned meeting shall be given at least two days before the

adjourned meeting is held. Such notices shall specify the nature of the business to be transacted and no other business shall be transacted at that Meeting.

Notices.

60. Notices for any meeting of Council must be given by the Secretary at least four days before such meeting. Notices for the meetings of Committees shall be given as the Council shall direct.

Computation of Inducise.

61. In computing the *inducise* of any notice the day on which the same is delivered shall be reckoned as an entire day

APPENDIX.

FORM A.

Form of Recommendation and Undertaking.

A. B..... of.....being upwards of..... years of age and being desirious of belonging to the Institution of Engineers and Shipbuilders in Scotland, I recommend him from personal knowledge as in every respect worthy of that distinction because (here specify distinctly the qualifications of the Candidate according to the spirit of Articles 5, 6, 7, and 8).

On the above grounds I beg leave to propose him to the Council as a proper person to belong to the Institution.

.....*Member.*

Dated this.....*day of*.....19

We. the undersigned, from personal knowledge, concur in the above recommendation.

.....*Member.*

.....*Member.*

I, the said A B., do hereby promise that in the event of my election I will abide by the Rules and Regulations of the Institution, and that I will promote the objects of the Institution as far as may be in my power.

.....

Form B.

Form for Transfer from one Class to another.

A. B.....of.....having been a ..... of the Institution of Engineers and Shipbuilders in Scotland for.....years, and being desirous of becoming a.....of the Institution, we, from personal knowledge, recommend him as in every respect worthy of being elected a..... of the Institution.

..... *Member.*

.....*Member*

.....*Member.*

I, the said A. B., do hereby promise that in the event of my election I will abide by the Rules and Regulations of the Institution, and that I will promote the objects of the Institution as far as may be in my power.

.....

The Council having considered the above recommendation and undertaking approve of the same.

....*President (or Chairman).*

*Dated this.....day of.....*19

BYE-LAWS.

MEDALS AND PREMIUMS.

Marine and Railway Engineering Medals.

1. Each of the two Medals founded by subscription, for the best paper in the Marine and Railway Engineering Departments respectively, shall be awarded by the vote of a General Meeting, not oftener than once in each Session.

Institution Medal.

2. The Council shall have power to offer annually a Medal for the best paper on any subject not comprehended by the Marine and Railway Engineering Medals. Such additional medal to be called the Institution Medal, and to be paid for out of the Funds of the Institution, until a Special Fund be obtained. This medal also shall be awarded by the vote of a General Meeting.

When Medals may not be awarded.

3. If it shall be the opinion of the Council that a paper of sufficient merit has not been read in a particular department during any Session, the Medal shall not be given in that department; and, in the case of the Marine and Railway Engineering Medals, the interest arising from the particular Fund shall be added to the principal.

Medals and Books may be awarded.

4. If the Person to whom a Medal may be awarded shall express a wish to receive a Bronze Medal, accompanied with the extra value in Books, in lieu of the ordinary Gold Medal, the award shall be made in that form. The Council may recommend premiums of Books in lieu of, or in addition to, the Gold Medals. The value of such premiums of Books to be determined by the Council.

MANAGEMENT OF THE LIBRARY.

Appointment of Library Committee.

5. The Council, at their first Meeting each Session, shall appoint eight of their number to form a Library

Committee, one of the eight to be Honorary Librarian and Convener of the Committee. Three Members of the Committee shall form a quorum.

Secretary shall have charge of Library.

6. The Secretary of the Institution shall have charge of the Library, and shall also act as Secretary of the Library Committee.

Powers of Library Committee.

7. The Library Committee, subject to the sanction of the Council, shall expend in Books and Library expenses the sums placed at their disposal, and, subject to the approval of the Council, may make Bye-Laws for the management of the Library, and appoint Assistants. The sum of £30 or thereby shall be expended annually out of the funds of the Institution, in the purchase of Books for the Library, in addition to the ordinary expenditure in binding, &c.

Duties of Library Committee and Annual Report.

8. The Library Committee shall annually make an examination of the property in connection with the Library, and report to the Council, detailing the state of the Library affairs.

LIBRARY BYE-LAWS AS TO USE OF BOOKS.

When Library is to be open.

9. Except during Holidays and Saturdays, the Library shall be open each lawful day from 1st May till 30th September inclusive, from 9.30 a.m. till 5 p.m. On Saturdays the Library shall be open from 9.30 a.m. till 1 p.m. On the 1st October and thereafter throughout the Winter Session the Library shall be open each lawful day from 9.30 a.m. till 8 p.m., except on Meeting nights of the Institution and Royal Philosophical Society, when it shall be closed at 10 p.m. The Library shall be closed for the Summer Holidays from the 11th July till 31st July inclusive.

Who may borrow books.

10. Books shall not be lent to any persons except Members, Associate Members, Associates, Students or Honorary Members of the Institution; but a person entitled to borrow books may send a messenger with a signed order.

Books for Consultation only.

11. The books marked with an asterisk in the Catalogue shall be kept for consultation in the Library only, and shall not be lent.

Librarian to keep Accession Book.

12. The Librarian and Assistant Librarian shall take their instructions from the Secretary of the Institution. They shall keep an Accession Book, in which shall be entered the particulars of all books purchased for or donated to the Library.

Register of books lent kept.

13. The Librarian, or Assistant Librarian, shall keep a Register, in which he shall enter the titles of the book or books lent, the date of lending, the name of the borrower, and the date of the return of the book or books to the Library.

Borrower to sign for books.

14. The borrower of the book or books, or, in his absence, the bearer of his order, shall sign his name to the entry of such borrowing in the Librarian's Register.

Librarian to certify return of books.

15. The Librarian, or Assistant Librarian, shall sign his initials to the date of the return of the book or books.

Books damaged to be entered in Register Intimation to Library Committee, and notice to last borrower.

16. The borrower shall be responsible for the safe return of the book, and if it be damaged or lost he shall make good such damage or loss. Should books be returned in a damaged condition, the Librarian, or Assistant Librarian, shall immediately make an entry of the fact in the Register, and report the same to the Library Committee without delay; and he shall give notice in writing of such entry, and report to the person from whom he last received the book, within three clear days of the receipt of the book, exclusive of the day of receiving the book and the day of giving such notice.

Number of books which may be borrowed at one time.

17. No person shall be entitled to borrow, or have in his possession at one time, more than two complete works belonging to the Library, or two volumes of any periodical.

Persons in Arrears of Subscription not to have use of Library.

18. No person being six months in arrears with his subscription to the Institution shall be at liberty to use the Library or Reading Room.

Time books may be obtained.

19. No borrower shall have the right to retain a book longer than thirteen clear days, exclusive of the days of borrowing and returning; and written notice shall be sent to the borrower one day after the time has expired. In no case shall any book be kept longer than twenty clear days.

Lots to be drawn when two may apply for the same book.

20. In the event of two or more persons applying for the same book at the same time, the applicants shall draw lots for priority.

Introduction of friends to Reading Room.

21. Each Member shall be entitled to introduce a friend to the Reading Room, whose name shall be written in the Visitors' Book, together with that of the Member introducing him.

Annual scrutiny of books.

22. All books belonging to the Library shall be called in for inspection, and the lending out of books shall be suspended in each year for one week, being the last seven clear days of March; and all Members shall be required, by an intimation to be inserted in the notice calling the preceding meeting of the Institution, to return all books in their hands to the Library on or before the day next preceding the period before mentioned.

NOTE.—The Library and Reading Room are open to Members, Associate Members, Associates, and Students; and the Library of the Philosophical Society is open for consultation.

WILLIAM BROWN, *Convener.*
WM. M. ALSTON.
PROF. A. BARR, D.Sc.
W. A. CHAMEN.
E. HALL-BROWN.
WILLIAM MELVILLE.
JOHN STEVEN.
JOHN WARD.
EDWARD H. PARKER, *Secretary.*

21*st April*, 1903.

INSTITUTION
OF
ENGINEERS AND SHIPBUILDERS
IN SCOTLAND
(INCORPORATED).

FIFTIETH SESSION—1906-1907.

23rd October, 1906.

PRESIDENT'S ADDRESS.

GENTLEMEN,—My first duty to-night is to thank you for considering me worthy to be your President for a second term of office. I can assure you that your kind forbearance with my many shortcomings last session was indeed gratifying. It is very human to feel somewhat elated, when one's best efforts have been appreciated by those for whom these efforts have been made, and my re-election clearly indicated that what I had done had met with your satisfaction and approval.

The Institution is still in a very flourishing condition. The financial position is satisfactory, and new members are continually being added to the roll, and so long as the membership increases, so also will the financial position improve, assuming, of course, that the Council do their duty by properly taking care of the funds and property entrusted to it, and abstain from any useless, reckless, or uncalled-for extravagance.

Regarding finance, particulars may be seen from the balance sheet prepared by the Secretary and Treasurer, but, briefly, I may state that there is at the credit of the Institution:—

Investments:—			
Clyde Trust Mortgages and Interest,...	£911	6	4
Glasgow Corporation Loan and Interest,	1011	6	2
Medal Funds Investments:—			
Clyde Trust Mortgage and Interest, ...	£914	1	6
On Deposit Receipt and Interest, ...	107	6	2
Cash:—			
In Bank on Deposit Receipt, ...	£5154	1	0
In Bank on Current Account, ...	95	14	9
In Secretary's hands, ...	14	9	7
	£8208	5	6

The net addition to the roll for the past session was sixty-one. Unfortunately, as on former occasions, death removed from our midst a considerable number, including one Honorary Member, sixteen Members, and five Associates.

The papers read during last session were all of exceptional merit, varied in their subjects, and of great interest to the members.

The Students' Section, under the chairmanship of Mr E. Hall-Brown, had a very successful session. Five papers were read, each of a most interesting and instructive character, and the students had the privilege of visiting the works of no less than six large firms, to the directors and managers of which the thanks of the Institution are due for their courtesy and hospitality during these visits.

A very important epoch in the history of the Institution, namely, the opening of our Fiftieth Session—the year of Jubilee—has now been reached, and while there is much reason for congratulating ourselves on the success which has attended previous efforts, there is also reason to feel solemnized by the great loss through deaths which the Institution has sustained during the past fifty years.

The actual date of inception is of less importance than the formation of the Institution, because the interest of the date is wholly dependent upon the results which justified the

formation, and these results have been more than justified, even to an extent which the highest prophetic gifts could ever have foreseen. Consequently, the historical retrospect is of the most pleasing and satisfactory character; but there is one regret, and that is, that so few of those who were contemporaneous with the beginning remain now to join in the approaching celebrations.

In 1857, the Institution had as its first President, the intellectual and worthy engineer, Professor Macquorn Rankine, whose writings are familiar to every engineer, and through them, he, "being dead, yet speaketh."

Professor Rankine was followed by Mr Walter Montgomerie Neilson, of locomotive fame, who did so much for speed and safety in railway travelling. He was succeeded in business by another deceased President, Mr James Reid, who practically brought up the locomotive to its present state of efficiency.

Other well-known names in the engineering world may be found on the roll of past Presidents of the Institution, and among others may be mentioned Mr James M. Gale, whose name will be for ever associated with Glasgow's magnificent water supply, and who for a long period of years acted as Honorary Treasurer of this Institution.

Mr William Foulis, whose wonderful knowledge in gas-producing plant did so much to illumine Glasgow at the least possible cost.

Mr John Elder, of Messrs Randolph & Elder, the introducer of the compound engine and founder of the great Fairfield Engineering and Shipbuilding Co., whose accumulated savings were generously spent on the inhabitants and town of Govan by his philanthropic and kind-hearted widow, whose death recently was deeply deplored by many humble recipients of her bounty.

Dr. A. C. Kirk, the designer and introducer of the triple-expansion engine, which so speedily became a favourite, owing

to the economy in coal consumption which resulted from its use.

Dr. Peter Denny, head of the great Dumbarton Shipbuilding and Engineering firm, through whose energy and indomitable perseverance the shallow rivers of the East have been navigated; and the products of the countries there brought to the various markets of the world, as well as giving to those benighted lands the goods and delicacies of civilised nations.

Time does not permit me to refer to the Napiers, the Thomsons, the Inglis', the Scotts, the Cairds, and many other distinguished men who have spent much time in our midst but have now passed over to the great majority.

The beginning of the Institution was contemporaneous with the beginning of a progress in all the arts and sciences without parallel in the history of the world. Since then there have been marvellous strides.

Little was known about electricity and its great possibilities. Telegraph messages had, however, been sent here and there as early as 1844, but it was not until 16th August, 1858, that Queen Victoria sent the first Atlantic message to the President of the United States of America; and had it not been for the knowledge of electricity, and the energy and marvellous ability of Professor William Thomson (now Lord Kelvin), the brightest star in our membership, individuals in this country would probably still be waiting messages from America. Now the world is almost circled by telegraph wires, which transmit information, not only by sound, but record the same with ink on paper. There are telephones in every office for the quick transaction of business, and in nearly every home, where busy housewives can order all the necessaries for creature comforts, without leaving the precincts of their own chambers. Wireless telegraphy also enables messages to be sent long distances through the air, permitting vessels in mid-ocean to converse with each other as well as with the shore. Electricity now lights every important town on the face of the earth; it drives

the tramways through our streets; it is the motive power in all our large shipbuilding yards, factories and workshops; and there appears no limit to its adaptability. Glasgow was perhaps the last of the large cities to adopt electricity. The authorities, with the usual Scotch caution, evidently wanted somebody else to go through the experimental stages. During the recent visit of the foreign societies of electrical engineers, I was told by an American that our waiting had not been in vain. He had no hesitation in saying that our electric power stations were the finest in the world.

Since 1857, many works of great magnitude have been constructed. Who at that period would have conceived the spanning of the Forth and the Tay by such gigantic bridges as those made by our Past-President, Sir William Arrol, or who would have expected to see such magnificent buildings as the University on Gilmorehill, the Fine Art Galleries, the Municipal Buildings, the Western and Victoria Infirmaries, the Christian Institute, and the Technical College? These are all evidences of progress and prosperity, and are absolutely necessary for the needs of an ever-increasing population.

Great alterations have been made by our Municipality in providing better accommodation for housing the poor and improving the condition of the city. Many old slums which were dens of vice and iniquity have been torn down, and replaced by substantial, well-ventilated houses and large open air spaces, special care having been taken to provide sanitary arrangements of the highest order.

Great improvements have also been made in connection with our harbour and river. The former has been greatly enlarged by the formation of the Queen's Dock and Prince's Dock—two splendid wet basins—where ships can be loaded and discharged clear of river traffic. Three very fine graving docks have been constructed, entering from Prince's Dock, and a large number of cranes, ranging from 10 tons to 150 tons lifting capacity, have been erected in suitable positions, the

largest being found necessary for shipping the heavy pieces of machinery now so frequently used on board ship. Another large dock or tidal basin is in course of construction at Clydebank, which, with its many railway sidings, will be able to free, to a large extent, the somewhat congested state of the upper reaches of the river, or Glasgow Harbour proper. Regarding the river much has been done in the way of building the quay walls and extending the berthage. The breadth has not been much altered, but the depth has been greatly increased, so that vessels of the largest size can be safely navigated. These wonderful changes have been made from the designs and under the special superintendence of two of our members—the late Mr James Deas, and his successor, Mr W. M. Alston.

During these years, our railway companies have not been idle. The Caledonian Company has brought its main line into the very heart of the city, and built that magnificent station, the Central, one of the finest in Europe The South Western Company has built the St. Enoch, also a station worthy of the city, but I cannot praise to the same extent, the North British Company, as its main station is nothing to boast about. All three Companies have, however, done much in extending branch lines, and popularising many country places, formerly quite unknown to the general public. With our underground railways and our rope-driven subway, great facilities are now given for speedy travelling to and from the suburbs.

With reference to marine engines and steam propulsion, the last half century has seen many changes. Steam pressures have risen from 20 lbs. to 300 lbs. per square inch, and in order that these pressures might be economically used, various designs of engines had to be adopted. About 1861, when steam pressures began to increase, the boilers gave trouble to engineers on account of the excessive precipitate, due to the evaporation of salt water with which they were fed, and to overcome this difficulty surface condensers were introduced, so that the boilers

might be supplied with distilled water, instead of with impure condensed water largely obtained from the sea. The success of surface condensation was at once assured, and ever since it has been universally adopted. In connection with this subject, namely, the desirability of allowing no deleterious matter to enter the boilers, fresh-water distilling plants and also grease extractors are now fitted in all well-appointed vessels. About 1867 compound engines came greatly into favour, although Messrs Randolph & Elder, the pioneers of this design, had made them at a much earlier period. At first the boiler pressure was usually 60 lbs., but as time rolled on, and engineers became accustomed to them, pressures increased until 120 and 130 lbs. was quite common. This type of engine was largely used for land purposes, and almost universally on board steamers until 1881, when Messrs. Robert Napier & Sons built the first triple-expansion compound engines for the s.s. "Aberdeen." Her cylinders were 28 in., 42 in., and 70 in. in diameter by 54 in. stroke, and her boiler pressure 125 lbs. These engines were designed and constructed by Dr. Kirk, one of our deceased members, and so great was their success and the economy obtained in coal, that a complete revolution took place in marine engineering. Shipowners became desirous of possessing triple-expansion engines, and makers were quite enthusiastic in their supply, vieing with each other who should be most successful with their productions. As pressures had rapidly increased with the compound, so did they rise in the triples, and now, in modern vessels, pressures of 215 lbs. are frequently used, although many engineers affirm that no economy is obtained above 180 lbs., and, for pressures above this, quadruple expansion engines should be adopted. Of this style a considerable number has been made.

I have stated that the triple-expansion engine caused a revolution in marine engines, but perhaps a greater is now before us, in the shape of the turbine, which has had a most remarkable development during the last ten years, gradually growing

into favour with both the Admiralty and the mercantile marine.

Thurston, in one of his last contributions to technical literature, said—"Probably never in the history of engineering was so simple a machine made the object of investigation by so large a number of able men, inventors, constructors, engineers, and men of science, and the subject of such extensive experimental research." It is, therefore, to be hoped that all the time, care, and attention which has characterised these researches, may be fraught with success, and that the large sums of money spent on experiments may not have been spent in vain. On the contrary, it may be found that not only is the turbine the machine which can give forth the greatest power for the least possible weight, but that it can also give the greatest horse power for the least quantity of fuel.

During the last fifty years, great developments have been made in passenger and cargo steamers. In 1857, perhaps the largest vessel, excluding the "Great Eastern," was the P.S. "Persia" of 3,600 tons; whilst now there are a goodly number of vessels exceeding 20,000 tons. During this year the two largest vessels ever built were successfully launched—the "Lusitania," from the works of Messrs John Brown & Co., Clydebank, and the "Mauretania," from Messrs Swan, Hunter & Wigham Richardson, Ltd., Newcastle-on-Tyne. Figures convey a somewhat bare idea of size, but if these two vessels are compared with the "Great Eastern" (Brunel's leviathan), it will at once be noticed what an enormous difference there is—

	"Great Eastern."	"Lusitania" & "Mauretania."
Length, ...	692 feet.	790 feet.
Breadth, ...	80 ,,	88 ,,
Depth, ...	—	60 ,,
Displacement, ...	27,000 tons.	45,000 tons.
Speed, ...	13 to 14 knots.	25 knots.

These two mammoth ships are each to be driven by turbines of a collective horse-power of 70,000, and as the owners (the

Cunard Co.), have obtained most valuable data from the running of the "Carmania," a turbine steamer of 20,000 tons, the new boats will get the full benefit of this data. Everything augurs well for their ultimate success, and, no doubt, when in actual service, Great Britain will once more possess the greyhound of the Atlantic.

Sailing ships are now few and far between. Cargo steamers, commonly called "tramps" have practically driven them off the seas. These "tramps" carry large cargoes, with a comparatively small crew, can travel more speedily than the "sailer" over a long voyage, and as their first cost is moderate, shipowners find them more remunerative than canvas-driven vessels.

On this subject, however, there was an article last week in the "Glasgow Herald," giving some particulars of Germany's huge sailing ship, the "R. C. Rickmers," which is fitted with auxiliary engines for driving her in a light condition at eight knots, and when loaded at six knots, in calm weather or when contrary winds prevail. The vessel is probably the largest sailing ship afloat. She is 441 feet in length over all, 53 feet 8 inches in breadth, displaces, when light, 3,500 tons, and has accommodation for 8,000 tons of cargo. Her gross register tonnage is 5,548 tons. Her main mast is 177 feet from the deck level, and on this and her other four masts she carries upwards of 50,000 square feet of canvas. On her first voyage she made splendid time, averaging under sail on long periods 13 knots—for eight hours she averaged 15¾ knots—while the triple-expansion engines of 750 I.H.P., fitted to drive a Bevis screw, enabled her to make from 6 to 6½ knots as a minimum speed. These results are regarded as suggestive of the fact that the days of the sailing ship may not be over, and much interest is consequently being taken in the application of the petroleum engine for driving such craft instead of using a boiler and steam engine.

Our navy has also considerably altered. The wooden walls

of the past have now changed into iron-clad battleships; first, second, and third class cruisers, most of them belted with armour plates; scouts, torpedo-boat destroyers, torpedo-boats, submarine boats, etc. The whole system of naval warfare has been revolutionized, and much valuable information gained by the experiences of the sea-fights of Cuba and the Sea of Japan.

During last session, I had the honour of informing you that the Council had been fortunate in securing a very suitable site for our new buildings, at the corner of Elmbank Street and Elmbank Crescent. I also explained how anxious the Council had been to obtain the best possible design, and the manner in which this was achieved, and how the plans of Mr J. B. Wilson were accepted as best fulfilling the needs of the Institution. The old property, purchased by the Council, has now been taken down, the old materials sold, and the site cleared, ready for building operations, which are expected to commence shortly. The building will be a fine example of the late English Renaissance, of great dignity, and finely proportioned. The external wall will be of white freestone; whilst marble and Mosaic will be largely used internally. The construction generally will be of a fireproof character. The basement will afford ample space for storage of books and magazines, with direct communication to library above. The ground floor contains the offices, secretary's room, large library—suitable for the ever-increasing number of books,—a comfortable and well-lighted reading room, a meeting room, and lavatories. The entrance vestibule leads into a spacious hall on this floor, from which a wide marble staircase, with double flights, leads to the first floor, on which are placed a small hall for meetings, a large smoking room, a coffee room (for those who don't smoke), a council room, also cloak room and lavatories. The main hall is situated on the upper floor, and is a lofty compartment with curved and panelled ceiling, capable of seating 400 persons. On this floor there are also

the main council room, an anteroom connecting it with the larger hall, and a spare committee room. Besides the staircase, which is carried up full size, a passenger lift, with communication to all the floors will be provided, and special care has been taken to have the heating, lighting, and ventilation equal, if not superior, to any public institution in the kingdom. These magnificent buildings have been designed, not only for the use of our members, but for the benefit of kindred societies, who may, for a small annual sum, secure the use of any room suitable for their meetings. They can, by arrangement, also have the use of the Institution library, and by affiliating themselves with the Institution will greatly enlarge the sphere of usefulness for which these buildings are intended.

By the end of our Jubilee Year we hope to be able to say—

"When fifty years have come and gone,
We've raised our Ebenezer stone."

VOTE OF THANKS.

Professor ARCHIBALD BARR (Member) said that he had been asked by a very diffident Council to perform a task which he thought properly should have fallen on one of its own number. He was sure all present agreed with what had been said—all except the quite unnecessary passage, in which the President spoke of his own shortcomings in the past session. He believed all would agree in assuring him that these had been non-existent. The President had given them a very interesting account of the great development that had taken place—he could hardly say in the President's own day in engineering, but, at any rate, in the day of the Institution—and he thought that the picture drawn by the President, of the progress made by the Institution in the past, and the very hopeful condition in which the Institution was at the present time, must have filled them all with pleasure and gratification, and he felt sure they would all join in giving the President a hearty vote of thanks for the address to which they had just listened.

The vote of thanks was carried by acclamation.

THE DEVELOPMENT AND PRESENT STATUS OF THE STEAM TURBINE IN LAND AND MARINE WORK.

By Mr E. M. SPEAKMAN (Associate Member).

SEE PLATES I., II., III., IV., AND V.

Read 23rd October, 1906.

THE general subject of Steam Turbines is not new to the Transactions of this Institution. Appropriately enough, the Hon. C. A. Parsons presented the first paper early in 1901, wherein the application of his own invention to purposes of marine propulsion was discussed. A second paper by Mr Konrad Andersson followed in 1902, and dealt with the de Laval turbine, while the more recent papers by Mr Melencovich and the Author, in 1904 and 1905 respectively, have dealt solely with the question of design.

No apology, perhaps, is therefore needed for introducing at the opening meeting of the Fiftieth Session of this Institution, the subject of Steam Turbines from the wider standpoint of their development and present status, coupled with that of certain general considerations affecting their adoption.

THE PROBLEM OF THERMODYNAMIC ENERGY CONVERSION.

As far as the reciprocating engine is concerned, the problem of Thermodynamic Energy Conversion, without excessive loss, is little nearer its solution than it was in the days of Newcomen and James Watt. However excellent it may be to-day in its complex construction and applicability to all sorts and conditions of service, there is little prospect that future improvements will bring this type of heat motor any closer to the ideal, and it is important to notice that ever since the time of Watt such improvements as have been made have only been mechanical, and though these

have naturally increased its efficiency, the reciprocating steam engine of to-day thermodynamically represents no improvement whatever over that of the days of Watt.

The conversion of heat energy in the reciprocating engine is accomplished by allowing steam to expand behind a piston against a resistance corresponding to the pressure.

The ideal efficiency of the process of conversion is expressed by the Carnot cycle represented in the formula

$$\frac{T_1 - T_2}{T_1},$$

in other words, to obtain the highest efficiency, steam should be expanded from maximum to minimum pressure and temperature, and, further, this expansion should be adiabatic. As is well known, this cannot be attained in practical operation, and much greater practical value, as a basis of comparison, attaches to the thermal efficiency compared with the Rankine cycle, as adopted by the Committee of the Institution of Civil Engineers, and which was defined as the ratio between the heat utilized and the heat supplied.

The losses in the ordinary engine are largely due to initial condensation resulting from the alternate heating and cooling of the cylinder walls; losses due to clearances in the cylinders and valve chambers, and to heat rejected in the exhaust; while in addition to these, conduction, leakage, radiation, and incomplete expansion assist in accounting for a loss in the utilization of available energy in the steam amounting to 40 or 50 per cent. in good average engines.

In addition to these thermal losses, the mechanical friction of the engine is considerable, involving a loss of power delivered to the generator or the propeller varying from about 6 to 16 per cent. in different types of engines, 10 per cent. probably being a good average value. If, therefore, the heat units utilized as work on the piston amounted to 50 per cent. of those available in the steam supplied, the total effective power delivered on the shaft would be but 45 per cent. of that available in the steam.

In view of these defects—yet with full appreciation of the standard of excellence attained by reciprocating engines—any means for the mechanical utilization of heat that promised a closer approach to the ideal was sure of a favourable reception, and this is probably the most cogent reason for the remarkable adoption of the steam turbine in its various forms during the last few years.

The conversion of heat energy in the turbine is in two stages; *firstly*, from thermal to kinetic energy; *secondly*, from kinetic energy to useful work, though the transformation takes place simultaneously. Expanding through a definite range of temperature and pressure, steam exerts the same energy whether it issues from a suitable orifice or expands against a receding piston: it is in the more perfect absorption of this energy that the turbine obtains its greater economy; its other advantages are inherent.

Some attention may be devoted to the systems of this utilization. The simplest is undoubtedly the de Laval method. Composed of a single wheel, the steam is adiabatically expanded in a stationary nozzle throughout the full pressure drop available, the only losses being due to friction and conduction of heat along the walls. The kinetic energy, however, which appears in the form of particles of steam, moving at a very high velocity, cannot be wholly absorbed by the wheel, and a departure from the ideal occurs from this cause. A practical difficulty is introduced by the laws which govern the efficiency of absorption requiring the wheel speed to be about one-half that of the jet, and on account of the want of a material of sufficient tensile strength this is unobtainable: as it is, gearing must be introduced in order to obtain speeds of rotation on the counter shafts capable of practical application, so that turbines of this type have not been made in sizes greater than 250 K.W., though in smaller sizes they have proved extremely economical.

To reduce the speed without the intervention of gearing, Parsons, in 1890, patented and made a turbine as adopted later by Rateau and Zoelly with one wheel in each stage, the action being similar

to that of de Laval's; but, while reducing the loss due to exit velocity, increased friction is introduced by the number of discs revolving in the steam. The two types differ somewhat in construction, Zoelly using only sufficient stages to enable him to dispense with diverging nozzles, and consequently higher steam and blade speeds than Rateau, who adopts more wheels and a reduced velocity, the ratios of the two, however, being the same in each case. Curtis introduced a modification of this multiple stage type in 1897, reducing the number of stages, but placing two or more rows of blades on each wheel.

These turbines are all of the impulse type; the pure reaction turbine, such as Hero's engine, not being found commercially successful.

The action of steam in the Parsons turbine was fully described in the Author's paper of last year. It consists of a simultaneous absorption and generation of energy in the moving rows, as opposed to the nozzle expansion and wheel absorption of all other types. From the diagram of velocities, therefore, it will be seen that for a given peripheral velocity and number of stages, the steam speed may be much reduced and a better relationship between them obtained, thus increasing the efficiency over that of other types.

Attempts have been made by various builders to combine the Curtis system of utilization at the high pressure end with Parsons' blading for the low pressure, but though several turbines of this type have been made, the cost of construction has proved excessive and the efficiency has hitherto been low.

In the case of the Parsons turbine, the steam is confined to the annular space between the spindle and the cylinder, the only part therefore subject to steam friction being the essential blading, the steam issuing from the blading round the entire circumference. In partial admission turbines, where the jet only issues at isolated arcs of the circumference, there is a distinct tendency to instability in the steam jet owing to its injector-like action causing a reduction of pressure between the jet and the wall.

The fluid efficiency that can be obtained in the extraction of energy from the steam varies somewhat according to the conditions—blade angles, number of rows, etc.—but may be taken as from 70 to 85 per cent., and deducting losses due to leakage and exit velocity, one arrives at the efficiency of utilization compared with the Rankine cycle.

With regard to the thermal range available in the turbine, steam pressures up to ordinary boiler capacities are in general use, while high superheat is advantageous and easily applicable; cases up to 270 degrees F. have been known. For marine work, only the lack of a suitable superheater has hitherto prevented its adoption. It is, however, at the lower pressures that the turbine gains most; vacua that are quite impossible in the piston engine on account of increased condensation and the excessive size and cost of cylinders and valves involved are highly desirable, for while the piston engine must release at about from 5 to 6 lbs. pressure the turbine can utilize vacua up to 29½ inches, the cost of condensation being but a small fraction of the additional gain.

The greater economy of the turbine, therefore, arises from the possibility of more efficient utilization of heat as well as from the greater thermal range available, the constant temperature of the cylinder and the absence of mechanical friction materially assisting this end.

Subjoined is a diagram illustrating the relationship of the various types of turbine.

The Ideal Motor.

Of the principal prime movers of the day, the steam turbine approaches more closely to the commercial ideal than does any of the others. The essential requisites of power supply are really the considerations on which the relative values of various types of motor are judged, and the successful operation of generating stations, whether for power, lighting, traction, etc., must be wholly subordinated to the commercial principles of economy of production and realibility of supply. The former includes both

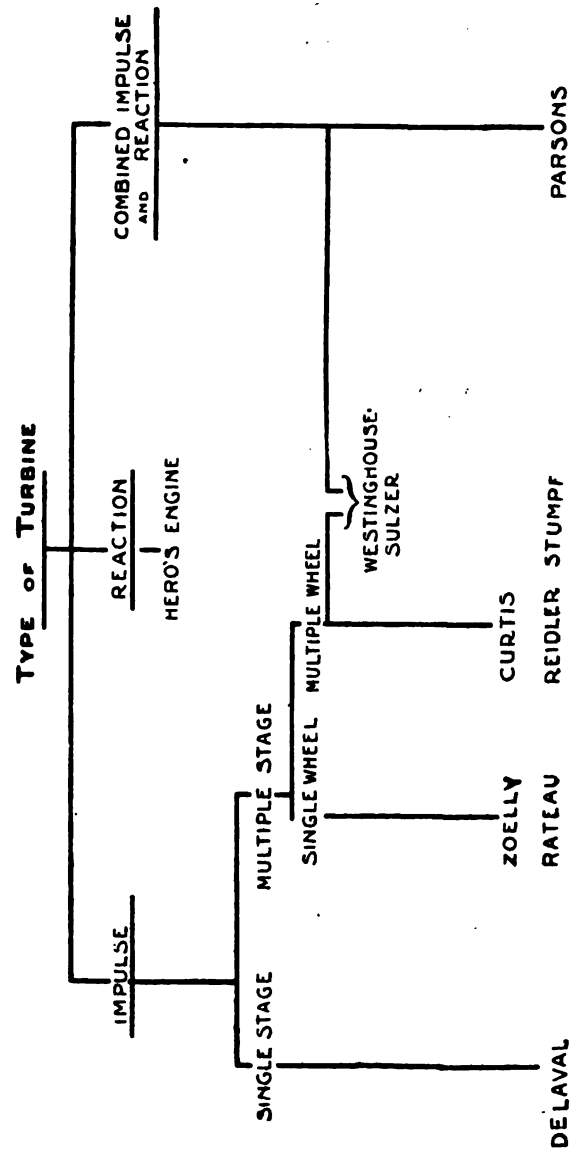
TYPE OF TURBINE
REACTION
HERO'S ENGINE
COMBINED IMPULSE AND REACTION
PARSONS
IMPULSE
MULTIPLE STAGE
SINGLE WHEEL
MULTIPLE WHEEL
WESTINGHOUSE-SULZER
SINGLE STAGE
ZOELLY
RATEAU
CURTIS
REIDLER STUMPF
DE LAVAL

the total capital cost and the working economy in fuel and maintenance, low initial cost and upkeep charges being generally quite as essential as low steam consumption.

While the ideal motor must fulfil these essentials, there are many other important qualities that it must also possess. To accommodate the peak loads of the day, elasticity of output enables a reduction in size or number of units, based on normal rating, to be made, while small size and weight involving smaller buildings and foundations also assist in reducing capital cost. Lack of vibration and steadiness of running are necessary especially for alternating current generators, and reliability of supply, apart from dispensing with unnecessary spare units, is a potent factor in reducing running costs.

While the ordinary steam engine has been applied with success to electric generation, the enormous cost and size attained by large units on account of the slow speed of rotation, are strongly against its wider adoption in power stations, where the individual power of the units installed is continually on the increase. Moreover, unless originally made for an overload rating, it is not capable of the large increase of power necessary for sudden loads.

The turbine, on the other hand, possesses these essential qualities in a marked degree, so much so that even in the largest power stations, hitherto composed only of reciprocating engines, turbines are installed when extensions are necessary.

The fundamental difference in practical operation between the two systems lies in the important fact that, in one case there is a motor of high uniform speed in one direction delivering a constant torque, as opposed to a low-speed engine whose essential reciprocating action must be converted into a rotary one involving fluctations of speed, torque, and balance.

The Development of Steam Turbines on Land.

Neglecting the history of turbines, prior to the era of triple-expansion engines, Mr Parsons' first patent covering "Improvements in rotary engines actuated by elastic fluid pressure" was

taken out in October, 1884, and described what was practically the first Parsons turbine ever made, and which is now installed in the South Kensington Museum. In describing this invention, reference was also made to its adaptability for pumping and marine work, the use of compounding and multiple screws being recommended. This original turbine was of the central admission double-flow type, and consisted of fifteen moving rows on each side of the inlet mounted on a 3-inch drum; the turbine developed 10 H.P. at 18,000 revolutions per minute, and was in practical operation for some years. Fig. 1.

The early development from 10 to 400 H.P., which covered nearly five years, is often regarded as unworthy of much notice, but in that period some important innovations and discoveries were made which have left their traces on modern practice to a marked extent. One of the original difficulties was in the manufacture of blading, innumerable schemes being tried. For instance, the blade rings were cast solid, the openings being machine cut and the inlet edge being bent to the requisite angle by hand; later, numerous forms of shrouding and continuous foundation rings were tried, and it was not for several years that the present system was evolved.

The early machines were all made with parallel drums, the expansive action of the steam being allowed for by varying the depth and pitch of the blades, but as condensing and consequently much greater variation in volume was not then introduced, this was not a great defect, except as regards a double loss from leakage.

A double-flow turbine on three diameters was introduced in 1888, allowing for a more convenient blading arrangement as powers were increased, but about 1890, when the single-flow type came into use, the parallel-flow machine was temporarily discarded and radial-flow turbines built for some years; the first condensing turbine, made in 1892, being of this type and consisting of a 150 K.W. turbo alternator of 4,800 revolutions per minute. A return to the parallel-flow type was then made, 1894, Fig. 2, and by 1896—just

ten years ago—machines of 500 K.W. at 2,500 revolutions were made. So far, development has been undertaken along the lines of continual effort to reduce the speed of rotation, and to evolve the best methods of construction for a machine that was rapidly approaching the stage of standardization.

At this period in marine work, attempts on different lines were made to harmonize the high speed turbine with a suitable propeller, and it is curious to notice that, while the developments of scientific knowledge and mechanical skill in other branches of engineering enabled the constructional difficulties attendant on lower speeds and larger sizes to be comparatively easily overcome, a distinct tendency is now noticeable towards a desire for higher speeds in order to reduce size and weight again.

By 1896, various small turbines of the de Laval type were in use, but of other systems none had passed the original patent stage in England, Rateau's machine dating from 1895, and that of Curtis from 1896.

In 1900 two 1,000 K.W. turbo alternators, Fig. 3, were supplied to the city of Elberfeld in Germany; they were of the tandem type with two cylinders in series on one shaft, but this design has since been discarded, it being found that, except possibly in very large sizes, better economy could be obtained by making the whole turbine in one cylinder, and no electrical turbines of the Parsons type are now made otherwise; the Zoelly machine has frequently been divided.

Turbines of from 1,500 to 2,000 K.W. soon followed, several being supplied for corporation work, and to large supply stations such as Carville where several 4000 K.W. turbo alternators are also installed, Fig. 7. A continual increase of economy has been obtained with increase of size, and turbines of 10,000 K.W. normal rating, with an overload capacity of 100 per cent., are now proposed for the great power supply scheme for London; these will probably easily attain the record consumption of 13 lbs. per K.W. hour. For such conditions, a reciprocating engine is obviously impossible.

For continuous current work, several turbo dynamos of 2,000 K.W. have been made, the commutation difficulties formerly met with in large sizes being completely overcome by the use of a compensating winding and improvements in the commutators and brush gear.

The largest turbine station in England is that of the London Underground Railway at Chelsea, containing eight units of 5,500 K.W. each. The Carville station at Newcastle-on-Tyne contains two units of 2,000 and six of 4,000 K.W. each, while the Neasden station of the Metropolitan Railway has four of 3,500 K.W., and the Port-Dundas station in Glasgow five of 3,000 K.W. each.

The curve of results shown in Fig. 8 represents the performance of a 1,500 K.W. Parsons turbine which was tested soon after erection, and again after sixteen months on service. The consistency of the results is typical of the property these machines have of maintaining their original economy.

In Fig. 9 are shown the results of a series of tests on a 3000 K.W. turbo alternator supplied by Messrs Brown, Boveri & Co., to the Frankfort Corporation. The economy attained by this machine was particularly good, and stood as a record for a long time. It is remarkable for having been obtained with a two-cylinder turbine.

In Fig. 10 will be found the tests of a 300 K.W. turbine run at varying revolutions over a wide range of powers; and, similarly, in Fig. 11 are given full-speed and half-speed consumptions for an American-built Parsons turbine. These figures are interesting, demonstrating as they do the curious fact that under certain conditions the total steam consumption is not affected in any way by the speed of rotation.

Turbo Generators.

The interest in the turbine has largely obscured the great development and improvements made in the design of generators, the electrical end of the turbine being accepted largely as a matter of course. Owing to the restrictions placed upon designers by

reciprocating engine speeds, the size, weight, and cost of construction of engine type generating machinery, have become almost prohibitively increased of late years, and but for the improvement in turbine systems it is extremely doubtful whether the recent extensive adoption of electrical energy, with its attendant benefits both socially and industrially, would have been as great as it has been.

Mr Parsons must be regarded as the pioneer in turbo generators as well as in turbines, the introduction of the latter enforcing profound modification in existing designs, while at the same time the turbine required a sphere of usefulness of its own that electric generation was admirably adapted to fill.

For some years continuous current generators alone were built, the turbo alternator not appearing till 1888, when a 75 K.W. machine was made. The latter was of the revolving armature type, a form that was used up till 1900, when the demand for bigger machines and higher voltages necessitated the introduction of the revolving field type of generator which is now so generally adopted.

Quite early it became evident that questions of mechanical stability would affect the design of generators almost as much as electrical conditions, and several systems of construction are in vogue. The governing influences are chiefly strength to resist the high centrifugal stress due to surface velocities often greater than those of the turbine itself, and questions of ventilation, critical speeds, and adequate stiffness of the shaft. In view of these, the large electrical companies have adopted different designs for their rotating fields; for instance, the General Electric Company and Messrs Brown, Boveri & Company use a laminated plate construction, Messrs Parsons a solid core with poles bolted on, while the Westinghouse Company have adopted the solid form.

To begin with, the generator characteristics necessarily determine the speed of the turbine, the number of poles and standard frequencies—60 per second for lighting and 25 for traction and power service—allowing but little margin of difference, though an ample speed of rotation. The value of this high speed lies in the

fact that the specific utilization of material round the armature periphery, depends on various facts of which peripheral velocity is the only one which admits of much increase over ordinary practice, and as this may be at least twice, the utilization may be practically doubled, the weight, size, and cost of the generator being therefore largely reduced.

The surface velocities adopted may be from 220 to 250 feet per second, as against from 100 to 150, involving almost four times the centrifugal stress. In the Westinghouse turbo generators of 5,500 K.W. for the London Underground Railway, and which are the largest yet made in England, the velocity is 295 feet per second, and to cope with this the strongest construction is necessary. Though a high degree of excellence has been reached, it is impossible to secure the same mechanical perfection in the generator as in the turbine on account of the nature of the coils, it being found that the high speed gradually compresses the winding and insulation and thereby may tend to throw the rotor out of balance; accidents to the turbine have occasionally occurred from this cause, and as with the turbine rotor the greatest possible care must be exercised in the workmanship and balancing of the revolving portion. The equality of power in the poles is important, otherwise forces tending to destroy the balance may be set up.

A further problem introduced into generator design is that of adequate ventilation, as owing to the reduction in radiating surface the intensity per square inch is increased. Mechanical ventilation by means of blower vanes on the shaft is frequently adopted, and to admit of very free air circulation the housing is frequently left open at the top to induce a draught, the sides being enclosed. While this forced ventilation absorbs a certain amount of power, the alternative system of leaving the machine as open as possible and giving a large amount of exposed surface has the defect of being often very noisy.

As with the turbine rotors, the question of critical speeds must be considered, and the shaft designed to be so stiff that the critical shall lie far above the operating speed. Comparatively little

difficulty is involved in harmonizing these conditions and the turbine affords an ideal drive on account of its uniform angular velocity. The most troublesome problem in the operation of alternating-current generators has hitherto been the periodical variation in rotative speed, due to the variation in torque on the shaft, on account of varying pressure and the angularity of the connecting rods. The heavy cross currents between the generators thereby induced, in spite of fly-wheels and other devices, are entirely avoided by turbine driving, and the addition of such a set to a reciprocating station containing either gas or steam engines has frequently proved of great assistance in mitigating this evil.

Turbo Fans and Blowers.

The combination of a steam turbine with an air compressing turbine, possesses all the advantages which are inherent in the turbine system generally, and great progress has been made in late years in the commercial application of turbine-driven blowers and exhausters for blast furnace work and other purposes, necessitating the handling of large volumes of air or gas.

The steam turbines employed are of the well-known standard type, and do not require description. The turbo-blower, Fig. 12, is practically the converse of the steam turbine, the guide blades serving to direct the air longitudinally through the turbine after it leaves each row of moving blades. The pressure of the blast is maintained by the velocity of the moving vanes, the delivery being perfectly steady and continuous and free from clearance losses, as opposed to the reciprocating type, in which a more or less violent fluctuation of pressure at every stroke is inevitable, coupled with constant renewal of air valves.

The choice of the most suitable type of blowing engine for blast furnace work has recently been made the subject of considerable attention in the iron and steel world, the use of gas engines driven by blast furnace gas having been widely advocated. It is found, however, especially in large sizes, that on account of the intricacies of the valve gear, and the necessity for complicated water jacketing,

that the gas engine is extremely expensive in repairs and maintenance, while the difficulties of cleaning the gas have frequently proved a serious drawback. The reciprocating steam-blowing engine likewise requires frequent attention, and both types have the defect of large initial cost and space occupied.

The turbine unit being capable of large overloads can temporarily increase the pressure and volume of its blast by 50 per cent. enabling a "hanging" furnace to be blown free, there being no risk of damage to the turbine if the blast be alternately thrown on and off, while the small size and general reliability essentially recommend it. A large number of these blowers, capable of delivering 20,000 cubic feet of air per minute at a pressure of from 12 to 18 lbs. per square inch, have been supplied to various iron-works, a noticeable feature being their low cost of maintenance in service.

For dealing with large volumes at low pressures, especially for gas blowing or exhausting, a different type of blower is recommended, Fig. 13, consisting of two or more propellers with stationary sets of curved guide vanes arranged between them. This form has been designed to supersede blowers and exhausters of the revolving drum type, which invariably become so quickly clogged when handling gas that opening out and cleaning is necessary every few weeks; this defect is entirely obviated by the extremely simple design and construction of the turbo exhauster, the first of which, supplied early in 1904 to the Coltness Iron Company, has run day and night ever since without shewing the slightest sign of clogging. This type in units capable of pumping 30,000 cubic feet per minute, has been applied to pumping blast furnace gases through the recovery plants, and blowing them through the washers and away to the boilers where they are used for raising steam, while another application is for pumping illuminating gas through town mains, the absolute steadiness of propulsion obviating the fluctuations of light so frequently noticed with other types of blowers. Other forms of turbo fans have also been supplied for colliery ventilation.

Turbo Pumps.

The centrifugal pump has long been recognised as the type of pump which combines the greatest simplicity with the lowest first cost, but until recently its use was practically confined to comparatively low lifts for want of a suitable high speed motor. With the adoption of turbine driving, however, the field for this type of pump has been enormously increased, so much, in fact, that centrifugal pumps are now not only available for all heads under which the piston pumps operate, but also for many conditions under which the latter are quite inapplicable, while owing to the higher speed of rotation—a feature inconsistent with adequate durability in the piston engine—the impeller diameter can be made much less for a given capacity; its hydraulic friction is thereby reduced and its efficiency correspondingly increased.

The first direct-driven installation made by the Parsons Company was in 1896, and was capable of delivering 50,000 gallons per hour to a height of 160 feet, but the largest turbine-driven centrifugal pumps deserve considerable notice, for in their case the inherent advantages of the turbine system—great elasticity of output, small size and high speed, coupled with ease of installation—were most strongly marked.

During the prolonged drought in New South Wales in 1902, the Prospect Reservoir of 12,000 million gallons, on which Sydney depends for its water supply, became almost depleted, and it was found desirable to supplement the supply by bringing water from the Nepean river, 14 miles away, which necessitated a lift of 240 feet. The requirements of the two pumps ordered from Messrs Parsons to raise 7½ million gallons a day as a temporary measure (both sets to be suitable for subsequently moving to permanent work elsewhere) were as follows:—The first set to be capable of raising 4½ million gallons per day 240 feet on temporary work, and eventually 1½ million gallons per day 700 feet on permanent work. The second set to raise 3⅓ million gallons per day 240 feet on temporary work, and eventually 10 million gallons per day 80 feet on permanent work.

Obviously no ordinary form of reciprocating pump would be equal to such a range of duty, and it was decided to adopt centrifugal pumps in sets of three and capable of being run in series or in parallel, the quantities and heights in each case being favourable to this system.

The turbine was of the standard 250 K.W. type, and revolved at 3,300 R.P.M. On one trial the larger pump was overloaded and actually delivered 2,000,000 gallons a day at 1,000 feet head, but on the contract trial, with only 37 lbs. steam pressure and 27·46 inches of vacuum, 1,600,000 gallons were delivered at 760 feet head, the water horse power being 250, and the steam consumption per water horse power 27·9 lbs. per hour. The combined efficiency of these pumps was estimated to be 56 per cent., giving a steam consumption per brake horse power hour of 15·6 lbs. On this trial, the mean delivery pressure from each pump was respectively about 100, 200, and 300 lbs. per square inch. A view of this pump is shewn in Fig. 14, while Fig. 15 illustrates a much smaller turbo pump at work.

The discharge from turbine-driven pumps working on a given head is absolutely free from the pulsation and shock so often met with in reciprocating engines, entirely obviating the use of air vessels, and making them very suitable for pumping direct into a long rising main. Turbines of the de Laval type have also been used with great success in driving single centrifugal pumps of small sizes, the large sizes being coupled in series and driven by the two shafts of the large gear wheels when high lifts are desired, or operated in parallel for low heads. One application of this type has been for boiler feeding, the governor being so arranged that the pump will automatically reduce its delivery without danger of bursting the pipes. Great attention is necessary to the design of impellers for turbo pumps; their adaptability to meet the different conditions of service that arise in practice involving many different shapes of vanes with various characteristics. The best workmanship and care to secure ease of flow are most essential.

Exhaust Steam Turbines.

The utilization of the exhaust steam from reciprocating engines is made advantageously possible by means of specially designed turbines, particularly in those cases where the intermittent but frequent working of the main engines gives rise to difficulties in the application of condensing plants, and consequently the majority of such engines for winding purposes or rolling-mills, or steam hammers, discharge directly into the atmosphere, the quantity of steam lost being considerable.

Mr Parsons has patented the combination of a reciprocating engine and a low pressure turbine arranged in series so that when the high pressure steam has been duly expanded in the engine it passes on to the turbine and thence to the condenser. This system was adopted for cruising purposes in H.M.S. "Velox," the engines being placed on the main shafts and disconnected at the higher speeds, while numerous sets of independent low pressure turbines have recently been installed in steel works and breweries.

If a pound of steam, at 150 lbs. absolute pressure, be adiabatically expanded to atmospheric pressure, the available B.Th.U's. per lb. are about 165, while a further expansion of 27 inches of vacuum yields another 130, an increase of 80 per cent., or 90 per cent. if expanded to 28 inches of vacuum. These high vacua being economically and easily obtainable under the modified conditions that turbine engineering has evolved, admit of a proportionate gain in power with a very slight increase of capital cost in the case of an exhaust turbine, while the proportions of reciprocating engine cylinders and valves at the very low pressures forbid the use of ordinary engines for the purpose.

A recently installed Parsons exhaust turbine of 250 K.W., working with steam between 2 and 2½ lbs. absolute pressure, consumed only 34·4 lbs. per K.W. hour, giving an efficiency of 57 per cent. compared with the Rankine cycle. Such turbines are of the ordinary type, the proportions of the blading being suitably modified to allow for the altered conditions.

Professor Rateau has also done a considerable amount of work

on this subject, employing a suitable turbine of his own type in conjunction with a steam regenerator that forms an essential feature of his installations. This accumulator is intended to regulate the intermittent flow of steam from the piston engines before it passes to the turbines, its function being to absorb the heat units in the steam while the main engines are exhausting, and to re-evaporate the water condensed therein when the engines are at rest.

Several of these turbines are at work in Britain and on the Continent, one of the largest being at the works of the Steel Company of Scotland. This turbine, of about 450 K.W., during a test made in January, 1906, consumed about 36·0 lbs. per K.W. hour, with steam of 11·4 lbs. absolute and a vacuum of 27·9 inches, the revolutions being 1,500, and the generator of the direct current type.

When working with live steam, wiredrawn in pressure from that of the boilers—perhaps 140 lbs.—down to atmospheric pressure as must occur during long periods of rest of the main engines, a considerable degree of superheat is imparted to the steam, increasing the efficiency about 7½ per cent. over that obtained when working with ordinary exhaust steam.

The simplicity of such installations and the great gain in power on the same steam consumption effected by their use will certainly result in a much wider application in the near future.

Marine Turbines. Adoption in the Royal Navy.

Is was thoroughly in accordance with the progressive nature of the policy of the British Admiralty that the first official order for marine turbines should be for a vessel of the Royal Navy. H M.S. "Viper" was launched in September, 1899, and was of exactly the same size as the numerous 30 knotters then under construction; she proved in many ways phenomenal. Her turbines developed upwards of 12,000 H.P., and the maximum speed attained was over 37·0 knots; her propelling machinery consisting of turbines and condensers, with shafting and propellers, weighed about

7½ per cent. less than that of similar destroyers fitted with reciprocating engines of only half the power, and whose maximum speed was 30 knots. The "Viper" ran ashore and became a total wreck during the naval manœuvres of 1901, and this fact, coupled with the subsequent and almost immediate loss of the sister vessel—H.M.S. "Cobra"—considerably delayed the proposed comparative trials with other destroyers, and somewhat adversely affected the progress of the marine turbine.

In spite of this, two more destroyers and a third-class cruiser, aggregating some 30,000 H.P., were built for the Royal Navy and tried during what may be called the experimental period—1903 and 1904—and from the results obtained in comparison with sister vessels fitted with ordinary machinery, the Admiralty felt themselves justified in setting aside not only their standard types of reciprocating engine, but also all other turbine systems.

The Naval Estimates of 1905-6 comprised the battleship "Dreadnought" of 18,000 tons, three armoured cruisers ("Inflexible" type) each of 17,250 tons, five ocean going destroyers of 33 knots speed, twelve coastal destroyers of 26 knots, and one special destroyer of 30,000 H.P. and 36 knots speed. The new Royal yacht "Alexandra" was also included. The propelling machinery was confined to turbines of the Parsons type, and aggregated about 300,000 H.P.

The total H.P. for the vessels of the 1906-7 programme, in consequence of the large reduction made in the Naval Estimates, will ouly be about 150,000, giving a total of about 450,000 H.P. for the Royal Navy alone in two years.

The official reasons for the change were stated in a memorandum issued by the Board of Admiralty in July, 1906, having reference to H.M.S. "Dreadnought" in particular, and to the adoption of turbines in general, and were couched in the following terms :—

"The question of the best type of propelling machinery to be fitted was also most thoroughly considered. While recognising that the turbine system of propulsion has at present some disadvantages, yet it was determined to adopt it because of the

saving in weight and reduction in number of working parts and reduced liability to breakdown; its smooth working, ease of manipulation, saving in coal consumption at high powers and hence boiler room space, and saving in engine room complement; and also because of the increased protection which is provided for with this system, due to the engine being lower in the ship; advantages which more than counterbalance the disadvantages. There was no difficulty in arriving at a decision to adopt turbine propulsion from the point of view of sea-going speed only. The point that chiefly occupied the Committee was the question of providing sufficient stopping and turning power for purposes of quick and easy manœuvring. Trials were carried out between the sister vessels, 'Eden' and 'Waveney,' and the 'Amethyst' and 'Sapphire,' one of each class fitted with reciprocating and the other with turbine engines; experiments were also carried out at the Admiralty Experimental Works at Haslar, and it was considered that all requirements promise to be fully met by the adoption of suitable turbine machinery, and that the manœuvring capabilities of the ship, when in company with the fleet or when working in narrow waters, will be quite satisfactory."

The speed and power of warships is continually on the increase, and it seems by no means unlikely that, before long, warships will rival in speed the new Cunarders, and whose horse power may fall but little short of theirs. When such powers are adopted, it becomes almost impossible to obtain the requisite cylinder volume with twin engines, on account of the small height available below an armoured deck. Triple screws involve a great addition to weight and space occupied per unit of power, as well as to the staff required, while tandem engines present disadvantages, well proven in the case of the "Blenheim" and "Brooklyn." Under such circumstances, little choice seems left but to adopt a suitable type of turbine.

The Development of Turbines in the Merchant Service.

The application of marine turbines to merchant vessels dates

from July, 1901, when the "King Edward" was placed in service on the Clyde. Her performance was watched with great interest, and to the excellence of the results obtained from her and the "Queen Alexandra," which followed in 1902, may be ascribed the revolution in cross channel boat machinery that has taken place in the last five years. The vessels are too well-known to require description; a summary of their performance is given in Appendix A.

The evolution in cross channel steamers due to the turbine has been remarkable, the vessels being universally popular owing to the absence of vibration and their smoothness of motion. Commencing with "The Queen" and "Brighton" for the Channel service, other orders quickly followed, and there are now no less than eighteen steamers fitted with turbines built, or approaching completion, for service between English and Irish or Continental ports, of which fifteen have exceeded 21·5 knots. The "Manxman," "Viking," and the three vessels of the Great Western Railway Company, have exceeded 23 knots, while the "Princesse Elisabeth" holds the record for all merchant vessels (excepting the "Lusitania" and "Mauretania"), with 24·06 knots on trial, and even more on service. These six vessels, all about 350 feet long and from 2,000 to 2,500 tons displacement, form a unique series, which is only approached by the five practically identical vessels of the "Onward" type, all built by Messrs Denny for the South Eastern Chatham and Dover Railway Company, and which are but slightly smaller and slower. In every case, the advantages of the turbine system in saving of weight, space, and cost of upkeep, have been most marked, and in the Appendices are given the tabular comparisons of coal consumption with that of the reciprocating engined vessels on the same service. The total H.P. in these channel vessels is now about 150,000.

Several steamers of the "King Edward" type, for the Thames and Clyde pleasure services, have been fitted with turbines, the small experimental set made by Messrs John Brown & Co., prior to the building of the "Carmania," being installed in the "Atalanta," while eight steam yachts, aggregating about 24,000 H.P., have also been constructed.

Between the channel steamers, and the large liners that have been built, there is a class of intermediate boats, several of which have been constructed by Messrs William Denny & Bros. for the British India Steam Navigation Co. Several vessels of from 17 to 18 knots speed were constructed in 1904, and more recently the "Rewa," of 10,000 tons, has been completed, this vessel being 445 feet in length by 57 feet in breadth, and attaining on trial a speed of over 18 knots. Her turbine arrangement is the usual three-cylinder one, and with her service speed of 16·0 knots her performance shows a distinct step in the application of turbines to large and comparatively slow vessels.

The "Maheno," of the Union S.S. Company of New Zealand, is rather smaller, being 400 feet by 50 feet, with a trial speed of 17·5 knots. On service between Sydney and Vancouver—a distance of 7,500 miles—her speed is about 15·5 knots, the coal burnt per day being only about 110 to 115 tons.

Several other intermediate steamers are also under construction abroad. In France, a 4,600-ton vessel is being built for the Marseilles and Algiers service, and in the United States four vessels each of 5,000 tons, with speeds of 18 and 20 knots, are approaching completion.

For large ocean-going liners, the turbine has been adopted less rapidly. The first vessels were the Allan liners "Victoria" and "Virginian," which have now been in service for eighteen months, and during the past summer have made several excellent passages, the latter vessel having frequently broken the Canadian record, and both vessels exceed the designed speed. The record trip of the "Virginian" has been made at 17·6 knots.

A closer comparison of the relative merits of the two engines, however, will be obtainable from the "Caronia" and "Carmania" of the Cunard Line, the designs of which were published by the builders in December, 1905. In point of speed on trial, the "Carmania" exceeded that of her sister ship by nearly a knot, though the speed maintained on service is about the same, namely, 18 knots. No detailed figures are yet available for publication regarding the coal

consumption, though substantial advantages are obtained in the "Carmania" in extra cabin accommodation and reduced engine-room staff. As to the cost of upkeep, it may be remarked that the "Carmania" has run for nearly twelve months without having her cylinders opened for inspection.

Two large vessels are also under construction for the Toyo Kishen Kaisha of Japan, of 18 knots speed, and about 25,000 tons displacement, for the Pacific service, while the Egyptian Mail Company has recently placed orders for two vessels, 540 feet long and of 20 knots sea speed, for the Mediterranean service, the turbine arrangement in each case being the three-cylinder one.

In point of size and interest, the large Cunarders, now completing at Clydebank and Wallsend, occupy the principal position. These vessels must attain a trial trip speed of at least 25·25 knots, and a sea speed on one complete voyage out and home of 24·75 knots. The horse power necessary is approximately 70,000, and the enormous size of the individual parts necessary practically prohibits the use of piston engines and twin screws. A four-shaft arrangement has been adopted in this particular case, the limitations affecting piston engines of such an enormous size being largely avoided by the use of turbines.

The tremendous increase in dimensions over anything yet built has involved the most careful investigation, and it is safe to say that in no ships, hitherto contemplated, has the design been undertaken with as much care or thoroughness.

The total horse power of marine turbines in merchant vessels only, built and now on order, approaches 600,000, with an additional 15,000 of turbines of other types. Figs. 16 to 23 illustrate different arrangements of marine turbines showing the dispositions commonly adopted.

Measurement of Power Developed.

The impossibility of "indicating" steam turbines (in the ordinary sense) has directed attention to the measurement of brake horse-power, for it is only on this basis that their correct thermal

efficiency can be determined. Several ingenious instruments have been invented for measuring the torque in the shaft, and the necessity for comparing this with reciprocating practice has resulted in some highly interesting discoveries regarding the stresses in propeller shafting when these instruments have been used on ordinary vessels.

The simplest method of arriving at the power of an electrical turbine is by the use of a water brake. Readings of pressure and speed of rotation can then be obtained in conjunction with the power, and the turbine being afterwards coupled to a generator, these pressures form an amply correct guide to the power developed. Another method is to use a simple water resistance when the turbine is coupled direct to the generator.

While the former method has long been in use for finding the mechanical efficiency of small stationary engines, the accurate determination of the B.H.P. of marine engines has been greatly neglected. As long ago as 1877,* Mr W. Froude suggested the use of a large water brake secured to the propeller shaft in the place of the screw, the trial being made while the vessel was at rest; and engines are frequently run with the propeller shaft disconnected, the frictional power running light being measured with the ordinary indicator, a method which gives ample opportunity for error. The cost of running large marine engines in the shop in connection with a brake is prohibitive, while torsional dynamometers on board ship are very difficult to apply. With the adoption of turbine machinery, therefore, it became absolutely necessary to have some method of measuring the power transmitted to the screw directly off the shaft, and all meters hitherto made have been based on the well-known fact that even the strongest shafts assume a twist under the influence of torque, and that the arc of torsion, for stresses up to the elastic limit, will be directly proportional thereto.

The work that has been done in Britain in this line has been entirely due to the efforts of Messrs William Denny & Bros., whose

* See Transactions Inst. Mechanical Engineers.

torsion meter has been widely applied to vessels fitted with steam turbines with most satisfactory results. Access to experimental tank results is essential for the development of the full value of the data obtained, but, in any case, with marine turbines, a torsion indicator is as necessary for checking trial results as were ordinary indicators in reciprocating work. A full description of the Denny-Johnston meter was given by Mr Ward in the course of the discussion on the Author's paper of last year, and it is not proposed to enlarge upon it again, beyond remarking that both the "Carmania" and the large Cunarders are fitted with it.

In Germany a different form of indicator is employed. The subject of torsional vibration of shafting has received very careful attention in that country, and the types of meter employed by Frahm and Föttinger have been specially designed to secure definite records of this fluctuation of stress, as opposed to the Denny-Johnston meter from which only the mean torque can be read; the German methods involve greater complication, but suggest some important possibilities in design.

The distance between the engine and propeller is generally considerable, and the shaft, therefore, should not be regarded as rigid, bnt rather as a torsional spring, more or less elastic according to its proportions, which is kept under stress by the opposite couples at its ends. With the engine running perfectly uniform, as in the case of a turbine against a constant resistance, the shaft would undergo a constant stress, and the torsion would therefore be constant also, but with the fluctuation in turning moment due to pressure and weight of reciprocating parts, the torsion due to the engine is far from constant. Moreover, the inevitable fluctuation in propeller resistance at the other end of the shaft increases the oscillatory nature of the stress, and the shaft is therefore subject to torsional vibration of a very irregular and complex character. Consequently, the arc of torsion is continually varying, and the shaft even in the best (so-called) balanced engine is in a state of violent vibration, which, though it may easily escape the eye of an observer, is yet instantly detected by either of the

German types of indicator. To emphasise the degree of this vibration it has been proved by measurements made by Frahm and Föttinger quite independently, one with an electrical indicator, the other with his mechanical type, that the arc of torsion is even occasionally negative: in other words, the shaft and engines are at times being dragged round by the propeller, while at other moments the torsion stresses may attain three times their normal magnitude.

In the German cruiser "Hamburg," and in the turbine steamer "Kaiser," the Föttinger meter shown in Figs. 24 to 27 was adopted. The method of working will be easily seen from the arrangement and details given. A disc (1), Fig. 27, is fixed direct to the shaft in a convenient place, while a few inches from it is a second disc (2) carried on a tube concentric with the shaft and as long as convenience permits. (Obviously the test length is limited by the span between the bearings). These discs perform practically the same functions as those in the Denny-Johnston meter; that is the arc of torsion on the circumference of the shaft is but small, but carried out to the circumference of the discs is magnified in proportion. Mechanism is so arranged between the two discs that their relative movement is reproduced and magnified by the same kind of pencil arrangement that is found in ordinary steam indicators. The paper carrying the drum is also concentric with the shaft, but is placed on the other side of the fixed disc to that of the tube. The diagram is taken in the usual way.

From these diagrams may be worked out the effective torque curve at any point in the revolution, Fig. 28, and thereby the B.H.P. or torsional horse power determined. The curves shown in Figs. 29 and 30 give the I.H.P., the torsional H.P. and the mechanical efficiency for the "Kaiser Wilhelm II." and the cruiser "Hamburg." These figures are interesting and demand careful attention, for exact determinations of this loss in power are very rare.*

* For further reference to this subject, the papers of Dr Föttinger, to the German Society of Naval Architects, contain practically all the published information on the question of effective torque.

The Question of Relative Economy and Efficiency.

The question of the relative economy of turbines and reciprocating engines, for marine propulsion and electric generation, has been the subject of very great professional attention during the last five years. In both cases commercial considerations enter largely into the comparison, and to attempt a final decision, after surveying only a component feature of the aggregate efficiency, would probably be to foster a delusion. In electrical work a direct measurement of the total thermal economy can be got by referring the steam consumption of engine and generator to the kilowatts developed at the switchboard, and in the Appendices will be found a large number of these test results, some of which are quite remarkable, while the turbine economy only is shown by actual brake test figures.

In marine work, however, as far as the actual economy of the main engines only is concerned, there are, except for comparatively recent tests on naval vessels, practically no reliable steam consumption data for piston engines, builders invariably being content with coal per I.H.P. without water measurements, thus leaving the efficiency of both boilers and engines undetermined. The I.H.P., moreover, is but a poor guide to the power delivered to the screw, and it is only during the last three years that the torsion meter has enabled this to be taken. Again, in spite of the most weighty and influential arguments, both scientific and commercial, only three experimental tanks exist in Britain whereby the important data of resistance and wake values, etc., can be determined. It is not, therefore, an easy matter to give a definite scientific analysis of the comparative performances of two exactly similar ships, even if in commercial development work it were always desirable to do so, and recourse must be had to comparisons on a broader basis.

In the Appendices, A, B, C, D, E and F, will be found tabular records of the service performance of turbine steamers compared with those of reciprocating engined vessels on the same service.

As far as actual steam consumptions are concerned, a figure of

14½ lbs. per equivalent I.H.P. was obtained in the "Turbinia," while in the "King Edward" and H.M.S. "Cobra" it was about 16 lbs. for all purposes, and in H.M.S. "Viper" 15 lbs. H.M.S. "Amethyst" obtained a consumption of 13·6 lbs. under these conditions, and all these figures compare well with the performance of the notoriously efficient R.M.S. "Saxonia," wherein 14·3 lbs. was the service figure.

An objection to turbines was raised at the outset on account of their consumption increasing as the speed of rotation diminishes. As a matter of fact, this increase is very slight for the first 12 per cent., but then becomes greater owing to the simultaneous decrease of power. The use of cruising turbines for the lower speeds has assisted to restore the relation between blade speed and number of rows which is essential for good performance, and down to nearly half speed the turbine is better than the piston engine. A complete series of the results of the performance of the cruisers "Amethyst" and "Topaze" was published in *Engineering* in November, 1905, and the comparative features are corroborated by the trials of later vessels.

While the performance of reciprocating engines has remained almost stationary during the last four or five years, that of the turbine is continually improving, with the added knowledge and experience of constant development.

Multiple Screws.

The original difficulty encountered in the application of turbines to marine propulsion was in the design and arrangement of propellers for high speeds of rotation. The "Turbinia" was originally fitted with one shaft and one propeller, but it was found impossible to thus efficiently absorb the power, and recourse was had to multiple shafts and screws driven by a turbine in series. By this means the power per shaft was reduced, and a smaller propeller made feasible. With a given pitch-ratio, the absolute pitch was also reduced and higher revolutions obtained; with the smaller diameter an increased head could be got which admitted a higher

thrust per square inch of blade area, or conversely less blade area for a given total thrust.

Following this idea to its logical conclusion and subdividing the power over several shafts, smaller turbines were obtained with a correspondingly increased overall efficiency. The question then became the exact harmonization of the propeller and the turbine for maximum propulsive efficiency, and as more experience was obtained, the excessive multiplicity of propellers, two and three per shaft, was gradually discarded as it became evident that no sacrifice of turbine efficiency was involved by slower revolutions, provided that the other proportions of the turbine were suitably modified. The almost universal practice at present is to adopt one screw per shaft and to arrange the turbine to suit; only in very exceptional cases would the use of tandem propellers be justified.

The number of shafts depends largely on the power developed; three shafts are preferable where the turbine proportions admit of their use, but in very large installations the individual size of the cylinders is reduced by having four, the governing feature being the proportions of the blading.

Auxiliary Machinery.

Considerable modifications have been found desirable in the proportions of condensers and air pumps for working in conjunction with turbines, due to the greatly increased volume and reduced temperature of the steam. With well designed apparatus, a vacuum of from 27 to 28 inches can generally be maintained with about one square foot of surface per I.H.P., and a circulation at 70 degrees F. of thirty times the feed water. A vacuum, however, of from 27 to 28 inches will affect a saving of about from 5 to 6 per cent. in the steam consumption of the main unit, but to obtain this, a higher ratio of cooling surface to H.P.—possibly 1·4 square feet—must be allowed, as well as a considerable increase in the quantity of circulating water—never a difficult matter in marine work, where, however, the surface is rather less. A proportionally larger air

pump should be employed as well, but the additional power required for this and the larger circulating pump will not exceed from 1 to 1½ per cent. on the total power, leaving a net gain in economy of about 4½ to 5 per cent. due to the high vacuum.

For vacua above 28 inches pumps of ordinary construction are unsuitable, and the desirability of using (when convenient) the highest possible vacua, demands the employment of greater refinements. It is desirable to maintain the temperature difference between the cooling water leaving the condenser and that due to the vacuum as small as possible, and by the help of the "vacuum augmenter" this can be reduced to below 5 degrees F., even with high rates of condensation per square foot.

The action of the intensifier is to draw off the residual air to a much greater extent than is possible with ordinary pumps alone, and the condensation takes place with much greater rapidity and allows a great reduction in the cooling surface, provided that the circulating water is not diminished in volume, and that the velocity through the tubes is kept at about five feet per second, the total quantity being equal to at least fifty times the feed water.

The following table illustrates the gain of energy due to these higher vacua, assuming adiabatic expansion from 150 to 1½ lbs. absolute :—

Vacuum, ...	26 in.	27 in.	28 in.
Temp. degrees F., ...	126·5	116	102
Volume per lb. cub. feet, ...	137·5	177·5	256
B.Th.U's available per lb., ...	277	293	312
Increase in B.Th,U's, ...	—	16	19
Increase per cent., ...		5·77	6·48

To obtain a similar increase in available energy by merely increasing the pressure above 150 lbs., compared with reducing it from 27 to 28 inches, it would be necessary to go up to over 200 lbs. absolute, while in the case of the 26-inch vacuum it would be necessary to go to over 250 lbs., and either pressure would greatly increase the weight and cost of turbines and boilers.

The increase in steam volume involves much larger exhaust pipes than were usual, and it should be noted that the upper tubes in the condenser need to be much more widely spaced to allow an easy flow of steam around them. On account of the lower hot well temperatures, it is generally desirable to fit feed water heaters fed by steam from the exhaust of the auxiliary engines.

Turbine driven auxiliaries are frequently suggested, and have occasionally been adopted for fans, while several of the Channel steamers, some large warships, and the new Cunarders, are fitted with turbo-electric lighting sets, thus obviating the vibration so frequently set up by the dynamo engine.

Gas Turbines.

While the solution of the gas turbine problem does not seem entirely impossible—in fact gas turbines have already been made to rotate—little or no direct development can be expected until numerous difficulties of a practical nature have been overcome. The principles of turbo-mechanics are already well known, and are somewhat similar for gas and steam. Granted that the speed of the vapour due to explosion must be abnormally high—unless the temperature difference is very small, in which case the energy available will also be very small—the speed of the turbine must also be high and therefore difficult of application, unless the efficiency be sacrificed.

The negative work of compression required must form a large proportion of the total power developed and must be deducted therefrom; hence any inefficiency in the processes of compression and conversion into work will greatly reduce the effective power per unit of gas.

Further, the proportion of heat rejected must be very great, especially if an attempt is made to keep the temperature down, and this is probably the most serious difficulty, for the consequent effect on heat efficiency is very detrimental, while to adopt high temperature will involve the rapid destruction of blades and nozzles, a feature that seems at present insuperable.

Wide experience of the steam turbine enables one to foresee innumerable difficulties in the way of gas turbines, but fortunately a difficulty anticipated is of material assistance towards its solution.

Conclusion.

In conclusion, the author has to express his best thanks for the generous assistance rendered him by numerous firms and individuals, and especially to the Hon. C. A. Parsons and his companies, for the loan of blocks and photographs.

He also desires to thank Dr. Föttinger, of the Vulcan Company, at Stettin, for his kind permission to publish the views of his recording torsion meter together with some interesting results obtained therefrom, as well as the Council of the Institution of Civil Engineers for the use of one of their plates.

Appendix A.

Comparative statement of mileage and coal consumption of Clyde passenger steamers propelled by steam turbines and by reciprocating engines.*

VESSEL.	Type.	Length.	Breadth.	Draught.	Displacement.	Working Speed. †	Passenger Capacity.
				ft. in.			
King Edward - - -	T	250	30	6 0	650	18·5	1,994
Queen Alexandra -	T	270	32	7 0	750	19·0	2,077
Duchess of Hamilton	R	250	30	5 6	638	16·0	1,780
Juno - - - - - -	R	245	29	6 3	632	17·5	1,497

VESSEL.	Season.	Mileage.	Coal Shipped.	Sailing.	Miles per ton.	Average Coal per day.
		Miles.	Tons.	Days.	Miles.	Tons.
King Edward - - -	1901	12,116	1,429	79	8·47	18·1
	1902	15,605	1,897	110	8·24	17·25
	1903	18,435	2,180	106	8·45	20·6
	1904	19,253	2,339	106	8·23	22·0
	1905	20,926	2,351	122	8·9	19·25
Queen Alexandra - -	1902	16,598	2,037	106	8·14	19·2
	1903	19,421	2,393	125	8·11	19·15
	1904	19,978	2,684	123	8·44	21·82
	1904	18,439	2,048	112	9·0	18·25
Duchess of Hamilton	1901	15,504	1,758	111	8·87	15·85
	1902	14,850	1,744	105	8·51	16·6
	1904	13,026	1,464	85	8·9	17·25
Juno - - - - - -	1901	9,777	1,382	85	7·07	16·25
	1902	10,150	1,294	83	7·84	15·6
	1903	9,845	1,467	86	6·71	17·0
	1904	10,497	1,532	90	6·85	17·0
	1905	11,310	1,462	92	7·73	16·0

* The trial speeds for these vessels were respectively: "King Edward," 20·48; "Queen Alexandra," 21·43; "Duchess of Hamilton," 18·0; and "Juno," 19·3 knots.

† See Mr Parsons' paper to Inst. C. E., London, December, 1905.

Appendix B.

Comparison of "The Queen," "Onward," and "Invicta," with other vessels on the same service.

VESSEL.	Type of Engine.	Length.	Breadth.	Power.	Average speed.	Average consumption per 24 hours including double trip.	No. of trips run in 6 months ending Dec. 31, 1908.	No. of passengers certified to be carried per ton of coal burnt.	Average oil consumption per double trip.	No. of engine room staff including three engineers on each vessel.
		Ft.	Ft.	I.H.P.	Knots.	Tons.			Galls.	
"The Queen"	Turbines	323	43	8000	21	18·8	293	136	3·8	16
No. 1	Compound paddle	324	34·9	6000	18	20·2	31	78	6·96	20
No. 2	Triple ,,	280	35	4100	18½	12·1	116	108	1·448 and 8 lbs. of grease	12
No. 3	Triple ,,	280	35	4100	18½	12·0	206	109		12
No. 4	Triple ,,	280	35	4100	19	12·0	86	110		12
No. 5.	3-Cylinder compound	313	35	3500	17½	24·5	270	64	6·28	17
							No. of trips ran in month.			
* "Onward"	Turbines	324	42·2	9000	22·2	21·90	31	120	3·0	16
"Invicta"	Turbines	324	42·2	9000	22·12	21·23	31	124	3·0	16

* Two more vessels of this type are now in course of construction for the same service.

Appendix C.

Comparison of H.M. cruisers "Amethyst" and "Topaze," fitted with turbines and reciprocating engines. Vessels 360′ × 40′ × 14·6′, 3000 tons displacement. Designed speed, 21·75 knots, with 9800 I.H.P.

	"Amethyst."	"Topaze."
24 Hours Trial at 10 Knots.		
I.H.P., ...	897	897
Speed, ... knots	10	10·058
Total water per hour, ... lbs.	26,260	21,294
Water per I.H.P. per hour, ... lbs.	29·3	23·74
24 Hours Trial at 14 Knots.		
I.H.P., ...	2250	2251
Speed, ... knots	14·06	14·08
Total water per hour, ... lbs.	44,090	42,260
Water per I.H.P. per hour, ... lbs.	19·6	18·77
30 Hours Trial at 18 Knots.		
I.H.P., ...	4770	4776
Speed, ... knots	18·186	18·069
Total water per hour, ... lbs.	76,493	90,500
Water per I.H.P. per hour, ... lbs.	16	18·95
8 Hours Trial at 20 Knots.		
I.H.P., ...	7280	6689
Speed, ... knots	20·6	20·06
Total water per hour, ... lbs.	100,606	134,248
Water per I.H.P. per hour, ... lbs.	13·8	20·07
4 Hours Trial at Full Power.		
I.H.P., ...	13,000 14,000	9573 9868
Speed, ... knots	23·06 23·63	21·826 22·103
Water per hour, ... lbs.	176,845 190,525	209,950 199,140
Water per I.H.P. per hour, ... lbs.	13·6 13·6	21·93 20·18

Appendix D

Comparative trials of Midland Railway steamers fitted with turbines and reciprocating engines, showing results obtained by steamers running simultaneously, but in opposite directions.

	Reciprocating Engine.	Turbine.
Vessel, ...	"Antrim"	"Londonderry"
No. of trips, ...	48	48
Average coal per trip (tons), ...	35·6	35·3
Average speed in knots, ...	19·7	19·5
Vessel, ...	"Donegal"	"Londonderry"
No. of trips, ...	42·0	42·0
Average coal per trip (tons), ...	36·0	36·9
Average speed in knots, ...	19·2	19·8
Vessel, ...	"Antrim"	"Manxman"
No. of trips, ...	29	29
Average coal per trip (tons), ...	38·6	38·6
Average speed in knots, ...	19·5	20·3
Vessel, ...	"Donegal"	"Manxman"
No. of trips, ...	39	39
Average coal per trip (tons), ...	38·7	40·2
Average speed in knots, ...	19·3	20·3

NOTE—The speeds given are the speeds between the Wyre Light and the mouth of Belfast Lough.

Appendix E.

Comparative results of turbine steamer, "Viking," with those of other vessels on same service.

	No. 1.	No. 2.	No. 3.	"Viking"
Length, - - feet	360	330	265	350
Breadth, - - feet	42	39	34	42
Draught, - - feet	13	10½	10½	11
Displacement, - tons	2940	—	1520	2400
Gross tonnage, ,,	2140	1657	937	1990
Passengers certified to carry — No. 2 limited Board of Trade, - - No.	1994	1546	901	1950
Total mileage per season, nautical miles	7870	9577	12,072	8880
Coal per season, tons	4833	4208	3833	4206
Average speed on service, - knots	20	19	17	22·2
No. of engineers excluding boiler room complement:—				
Engineers, - -	5	4	3	4
Greasers, - -	6	2	3	3
Type of machinery,	3-cylinder compound paddle	2-cylinder compound paddle	Twin screw triple expansion	Turbine
Coal per nautical mile, - - ton	0·614	0·439	0·317	0·472

It is interesting to note that the weight of the paddle wheels and shaft of the vessel, No. 1 (the well-known "Empress Queen"), is about 45 per cent. more than the turbines only complete, of the "Viking," and still considerably more than the propelling machinery complete of the latter vessel.

Appendix F.

Comparison of the performance of the "Princesse Elisabeth" with that of other vessels on the same service.

	"Princesse Elisabeth."	"Princesse Clementine."	"Marie Henriette."	"Leopold II."
Length, - - - ft.	344	340	310	340
Beam, - - - „	40	38	38	38
Mean draught, - - -	9′ 7½″	9′ 4″	9′ 3″	9′ 3″
Displacement, - - tons	2005	1853	1847	1829
Gross tonnage, - -	1747	1474	1450	1375
Type of engine, - -	Turbine	Compound	Paddle	Engines
Date of construction, -	1905	1896	1893	1893
Speed on trial, -knots	24·0	22·187	22·2	22
1905.				
Number of trips, - -	82	278	278	232
Mean time of voyage, mins.	187	217	212	227
Average consumption per trip, - - - tons	23·01	24·05	23·82	24·3
January—June, 1906.				
Number of trips, - -	1340	132	106	44
Mean time of voyage, mins.	185·2	210·5	206·4	202·4
Average consumption per trip, - - - tons	24·71	23·22	24·27	24·87

Summarising these results, we get for the two types of vessels :—

	Turbine Steamer.	Paddle Steamers.
Total number of trips, - -	216	1070
Mean time, - - - -	185·9	215·4
Average consumption, - -	24·06	24

The turbine steamer, which is 8 per cent. larger in displacement, does the trip on the same amount of coal as the paddle steamers, which occupy nearly 16 per cent. more time on the voyage. The distance run is about 64 miles, and the fastest passage of the "Princesse Elisabeth" was in 2 hours 37 minutes, representing a peed of 24·85 knots.

Dr. A. L. Mellanby.

Discussion.

Dr. A. L. MELLANBY (Member) considered the paper submitted by Mr Speakman an extremely interesting one. The Author had the happy knack of collecting information which the majority of the Members had some difficulty in finding, and of putting it into such a form that they could easily understand it. He would like to make one or two criticisms upon the paper, and the chief of these was that, in his opinion, Mr Speakman was far too zealous an advocate of the cause he had espoused. A person without much engineering knowledge, after reading this paper, would in all probability come to the conclusion that reciprocating steam engines were altogether out of date; that anyone who bought such a machine must be somewhat weak-minded, and that those who made and tried to sell them could be scarcely honest. All who knew anything about the subject were aware that such was not the case, and it gave one somewhat of a shock after reading this paper to realise that so far as economy was concerned the reciprocating engine was still superior to the steam turbine even at its best. There were one or two points that he wished to mention in detail. At the very beginning of the paper Mr Speakman said, "As far as the reciprocating engine is concerned, the problem of thermodynamic energy conversion, without excessive loss, is little nearer its solution than it was in the days of Newcomen and James Watt." The obvious conclusion that was drawn from this sentence was that the problem had been solved in a satisfactory manner by the steam turbine. Mr Speakman then went on to say that "the reciprocating steam engine of to-day thermodynamically represents no improvement whatever over that of the days of Watt." He was not quite sure what Mr Speakman meant by thermodynamically, but he knew that the actual efficiency of such a steam engine was to-day much greater, and that the laws of thermodynamics were at this time much the same as in the days of Watt. They next found it stated that, "The ideal efficiency of the process of

conversion is expressed by the Carnot cycle represented in the formula $\frac{T_1 - T_2}{T_1}$, in other words, to obtain the highest efficiency, steam should be expanded from maximum to minimum pressure and temperature, and, further, this expansion should be adiabatic." It would appear from this sentence that, the chief reason for the reciprocating engine not attaining this efficiency was that the expansion could not be adiabatic, but, if that were so, there was certainly no reason for expansion in the turbine being more nearly adiabatic. As a matter of fact expansion was not carried on in properly designed reciprocating engines down to the back pressure, and on the face of it there seemed grounds for believing that this gave the turbine some advantage. A comparison of actual trial results showed that the turbine must have defects which more than counterbalanced this advantage, as otherwise its efficiency would be greater than it was. Mr Speakman then mentioned the Rankine cycle, and led one to assume that it was a cycle of much less efficiency than the Carnot cycle, and adopted on account of the low standard attainable by the reciprocating engine. As a matter of fact there was very little difference between the efficiencies of the two cycles for engines working between the same temperature limits. The Rankine cycle had been adopted because it involved a series of operations more nearly attainable in everyday practice than the Carnot. Since engines, as at present made, did not have the condenser in the working cylinder, and since the boiler was also a separate organ, they were unable, as in the Carnot cycle, to raise the temperature of the condensed steam to boiler temperature by compression. The Rankine cycle took account of the fact that the feed water had to be raised in temperature by the application of heat, but surely on this point there was the same limitation in the steam turbine as in the reciprocating engine. He wondered if Mr Speakman seriously meant it to be understood that more work could be got from a pound

of steam by a turbine than was given by the Rankine cycle. Mr Speakman pointed out that the turbine closely approached to the ideal motor, and with many of the points raised all would agree. A recent visit to the station at Lot's Road, London, with its enormous turbine driving dynamos, had, however, convinced him that for large units, at all events, great improvements must yet be made, both in the turbine and generator, before they would really be entitled to the unique position claimed for them. Further, Mr Speakman mentioned that a steam engine could not take an overload unless specially designed for that purpose. Now, if there was one weak point in the turbine, and especially in the Parsons turbine, it was its incapacity to deal with overloads. His meaning would be clear to all if they considered the majority of the tests that had been published, when it would be found that in practically all cases the efficiency of what was called an overload was greater than at the working load. It was clear from this that turbines were made much too large for their working loads, and what was called an overload was really no overload at all for the turbine, whatever it might be for the generator end. A reciprocating engine governed by alteration in the point of cut-off had no defect like this. It could be arranged to work an ordinary load at the most efficient point of cut-off, and considerable variation could be made both above and below this load without any appreciable change in efficiency. The admission pressure would vary very slightly for all cases, as would be found by inspecting the indicator cards. Perhaps his remarks could be better understood by considering the diagram, Fig. 31, which he had had prepared. This referred to a 50 K.W. Parsons turbine, designed for a working pressure of 160 lbs. per square inch, along the body of which gauges had been fitted, so that the fall of pressure as the steam passed through the blades could be noted. Observations at different loads had been taken, and the results plotted as shown in the diagram, where the base line gave distances along the

turbine, and the ordinates represented pressures. The pressures to the left were taken by a gauge in the steam pipe, close to the turbine. It would be seen that they varied between 162 and 169 for the different trials, and were shown by short horizontal lines. The next gauge showed the pressure immediately after the governing valve, and before the steam had passed through any of the blades. He would like to point out the great drop of pressure through this valve. Even at an overload, the pressure in what might be called the steam

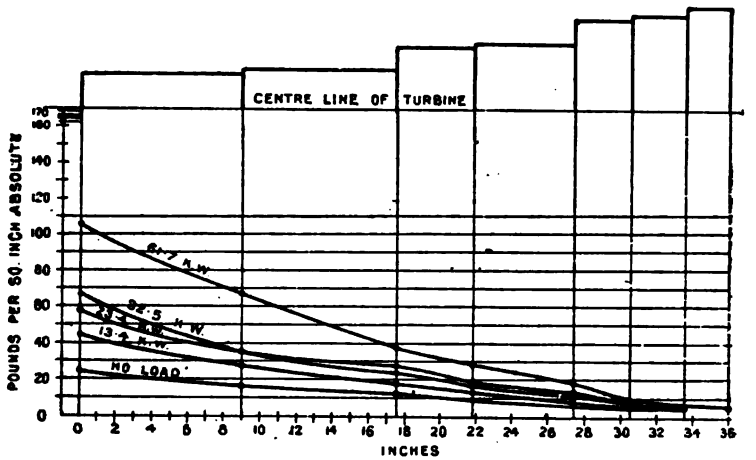

Fig. 31.

chest of the turbine was only 106 lbs., whilst in the steam pipe it was 165 lbs., and at half load the pressure dropped to 59 lbs. from 169 lbs., a most extravagant method of governing. Now, to get the maximum efficiency, the pressure in the steam chest for ordinary loads ought to be fairly near to that in the pipe, which was the case in the reciprocating engine governed by varying the point of cut-off. To say, therefore, with such a diagram before them, that the turbine was especially suited for overloads was absurd, and he thought it would have been

better if Mr Speakman had confessed that this was the weak point of such turbines. The reason for the inefficiency of this type of machine at low loads would then be quite clear to all. The extravagant method of getting an overload by using a bye-pass valve, was scarcely worth considering except as indicating in a rather emphatic manner this disadvantage under which the turbine laboured. In order to give an idea of the consumption of a turbine of this size, 50 K.W., at different loads, he had prepared another diagram, Fig. 32. In this

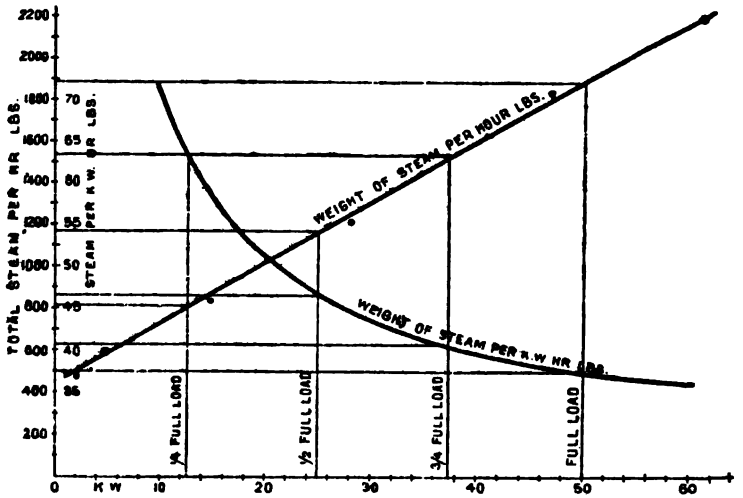

Fig. 32.

case the base line represented loads, and the ordinates steam per hour, and per K.W. per hour. It would be seen that at half load the consumption was 46·5 lbs., at full load 38·1 lbs., and at 25 per cent. overload 36·5 lbs. per K.W. per hour, none of which figures could be said to indicate an extraordinary efficiency. It might be

said that a 50 K.W. turbine was very small, and its efficiency not worth considering; but, at the same time, 50 K.W. dynamos were very common for private installations, and it was as well to point out the amount of steam they might be expected to use. He might mention that the steam supplied to the turbine was very dry, as was proved by the considerable amount of superheat in the steam after it had passed the governing valve. At the commencement of his remarks he had stated that so far as efficiency was concerned the reciprocating engine was ahead of the turbine. The engine he had in his mind was one made by Messrs. Cole, Marchent & Morley, of Bradford, which, when tested by Mr Michael Longridge, had a consumption of between 8½ and 9 lbs. of steam per I.H.P. per hour. The steam pressure was 120 lbs. per square inch, superheat 380 degrees to 400 degrees F., and power developed from 150 to 450 I.H.P. It might be of some interest if he mentioned that an engine of this type was about to be put down in the laboratory of the Technical College, and he hoped, at a not very remote date, to be able to put before the Members of the Institution some figures obtained from it. He would, however, like to point out to builders of reciprocating engines that there was no insuperable difficulty in the way of making their engines to have an efficiency, if not equal to, at least very nearly equal to, that particular engine. It was, indeed, a rather lamentable fact that at the present day so little was known of what took place in the cylinder, that no one could say with certainty why one engine was so much more economical than another. A few years ago it would have been said without hesitation that the economical engine had less initial condensation, but such a statement would be now looked upon with suspicion by at least all who were taking an interest in modern steam engine research work. It seemed strange that at this late date there should be so much room and actual need for research work on steam engines. Builders of turbines had set an example in this line that could not be

too widely commended. The amount of time and money that had been spent in trying to find the correct explanations of the difficulties met with in turbine work would stagger most builders of reciprocating engines. But the turbine makers had their reward—they now knew the sources of their difficulties, and they could make their improvements towards better efficiency in a reliable manner. With the reciprocating engine this was certainly not the case; engineers were yet groping in the dark, and it was no use trying to make improvements until they were quite sure what was the reason why the actual steam used by an engine was so much greater than that shown by the indicator card. He thought that all who had studied the matter would agree with him as to the necessity of carrying on research work. As to the way in which it could be done that was a matter of convenience and policy. Engine makers could perhaps carry it on in their own works. This would mean a special experimental staff, and a supply of costly measuring apparatus not usually possessed by engine builders. What he thought was a better method of doing such work was for the manufacturers to combine with some such Institution as the Technical College, and either by gifts of apparatus or grants of money give the trained staff there facilities for carrying on the work. He was perfectly certain that any expense entailed in such work would be amply repaid, and that the standard of efficiency of the reciprocating engine could be very soon considerably raised.

Mr F. J. Rowan (Member) said he rose merely to point out a necessary correction in the paper and he did so because it was a matter in which he had some personal interest. Referring to the de Laval turbine, Mr Speakman said that turbines of that type had not been made in sizes greater than 250 K.W. From the context, and especially the preceding part of the paragraph, page 14, the impression was conveyed that that was because they could not be made of a larger size. His personal interest in the matter existed in consequence of

his having been to some extent responsible for advising the adoption of turbines of that type, of from 300 to 400 K.W. capacity, and he had done that after having seen two de Laval turbines at work developing 480 B.H.P., besides having examined one of over 300 B.H.P. which had been working for some years. The statement, as made by Mr Speakman, was therefore not correct.

Mr JAMES CRAIG, B.Sc. (Associate Member) observed that Mr Speakman had omitted a point that, to some, might be of very great interest—namely, the application of the de Laval turbine to the driving of mills, and especially spinning mills. In mills of this kind, where a steady drive was essential, the turbine offered great advantages to the manufacturer. It had been found that, by replacing a compound piston engine by a steam turbine of the de Laval type, the output of the factory had been increased by 10 per cent.; while the number of breakages of yarns had been reduced by about 40 per cent., and the turbine had been found to be at least as economical as the piston engine. Mr Speakman referred to the application of the de Laval turbine for driving boiler feed pumps. These were possibly the first turbine-driven pumps in this country. They were of about 60 B.H.P. each. Each set consisted of two centrifugal pumps connected up in series. One pump was coupled to the slow speed shaft of the turbine, which drew from the hot well tank, and delivered into a small pump coupled to the high speed shaft of the turbine, running at about 20,000 revolutions per minute. The latter pump delivered to the boilers. The pumps were working under very disadvantageous circumstances, as they were exhausting into a feed tank through a long coil and against slight back-pressure. It would be readily understood, from the importance that Mr Speakman had attached to high vacua for turbines, that the turbine pumps did not lend themselves to economical working under these conditions, but the tests showed that the steam consumption was something like 51 lbs. per water horse power

per hour, and if the pumps could have been arranged for exhausting into a condenser, the steam consumption might have been as low as 25 lbs. per water horse power.

Prof. ANDREW JAMIESON said this was a very different kind of paper from the one which Mr Speakman read before the Institution last year. In the previous communication Mr Speakman appeared before them as a "free lance," and gave valuable new data. But now, however, for some reason or other, he was "tethered within stony ground," and had in consequence confined his remarks too much to historical facts regarding one kind of turbine and its various applications. In the first part of the paper, under the heading of "The Problem of Thermodynamic Energy Conversion," the Author said—"As far as the reciprocating engine is concerned, the problem of thermodynamic energy conversion, without excessive loss, is little nearer its solution than it was in the days of Newcomen and James Watt. However excellent it may be to-day in its complex construction and applicability to all sorts and conditions of service, there is little prospect that future improvements will bring this type of heat motor any closer to the ideal, and it is important to notice that ever since the time of Watt such improvements as have been made have only been mechanical, and though these have naturally increased its efficiency, the reciprocating steam engine of to-day thermodynamically represents no improvement whatever over that of the days of Watt." This is surely an over statement, if one recognised the fact that improved mechanical appliances were usually required to help to produce "improved thermodynamic energy conversion?" Newcomen and Watt, up to the retiral of the latter from business in the year 1800, used steam in its most prolific condition—viz., from a *maximum* of from 0 to 10 lbs. pressure per square inch *above*, down to a *minimum* of from 8 to 10 lbs. per square inch *below* atmospheric pressure. One had only to examine an adiabatic expansion curve of steam to see at a glance that this range took in the "fattest" part

of the diagram—consequently, engineers, since the beginning of last century, had (1) raised the pressure of the steam used from Watt's maximum of 10 lbs. per square inch to 200 or more lbs. per square inch, and improved the vacuum from 10 to 14 lbs. per square inch—*i.e.*, from a 20-inch to a 28-inch vacuum when the barometer stood at 30 inches. Each of these advances had given better "thermodynamic energy conversion" per pound of steam used than Watt obtained. (2) They had substituted surface condensers for the Watt form of jet condenser, in order to keep the condensed steam entirely separate from the cooling condensing water, and thus they had been able to pump back the latter as hot feed water into the steam boiler, which could not have been done with a marine engine jet condenser, and only in a few cases with land jet condensers, when the condensing water was good, clean, and pure. In this way the "thermodynamic energy of conversion" around the whole cycle of operations, including the whole apparatus and materials used from the coal, water, and steam in the boiler, right round through the steam engine, condenser, and feed pump, back to the boiler, had been improved since the days of Watt. (3) Steam had been not only highly superheated, but better and far greater ratios of expansion had been used; whilst the steam jackets had been better drained to the condensers than in the days of Watt, thus minimising leakage past valves and initial or cylinder condensation, etc., which also gave better "thermodynamic energy of conversion." Watt's boilers and engines required at least 10 lbs. of coal per horse power hour; whereas, now, the same work could be regularly and continuously obtained for one-sixth of that weight of good coal, and in some special test cases it had been obtained for one-tenth or for 1 lb. of coal per I.H.P. hour, or for about one-fifth the weight of steam required by Watt's engines in 1800. But in case that Mr Speakman or others should object to this method of comparison, take the very best recorded results of a 500 I.H.P. reciprocating steam engine, and compare these

with the very best recorded results of a 4000 I.H.P. Parsons steam turbine,* or one made under Parsons' patents. Here, then, as far as size was concerned, the results should have been greatly in favour of the steam turbine, which was at least of eight times the power of the reciprocating engine. But the thermodynamic efficiency according to the Rankine cycle (as adopted by the Committee of the Institution of Civil Engineers, and as referred to by Mr Speakman) was, for the reciprocating engine 72 per cent. when giving out 471 I.H.P., and for the turbine 74 per cent. when giving 3993 B.H.P., or, say, equivalent to about 4200 I.H.P. Besides which, the steam consumptions at these full loads were for the reciprocating engine 9·098 lbs., and at half load only 8·585 lbs. per I.H.P. per hour; and for the big steam turbine 9·83 lbs. per B.H.P. per hour; or 9·43 lbs. per equivalent I.H.P. per hour, reckoning the ratio of B.H.P. to I.H.P. as equal to 96 per cent. in both cases. As compared with these tip-top special test results, Mr Speakman said, on page 13 in the last paragraph—"If, therefore, the heat units utilised as work on the piston amounted to 50 per cent. of those available in the steam supplied, the total effective power delivered on the shaft would be but 45 per cent. of that available in the steam." Take it for granted that these statements held good for average marine engines; then, why did he put forward for the steam turbine "the fluid efficiency as 70 to 85 per cent." without deducting the losses due to leakage, etc., so as to arrive at a similarly fair daily working average marine steam turbine efficiency, according to the pre-

*For the full data and tests taken of the former by Mr. Michael Longridge, Mr. Speakman and others should refer either to *The Engineer* of June 2nd, 1905, or to page 780, *et seq.*, of Charles Griffin & Coy.'s publications, "A Text Book on Steam and Steam Engines, etc.," 15th or 1906 Edition. And, for the few details given of the latter, see Proceedings of the Institution of Civil Engineers, Vol. CLXIII., Part I., 1906, for a paper on "The Steam Turbine," by the Hon. C. A. Parsons and G. G. Stoney in their first Table, and in the discussion under the speaker's name; as well as in the afore-mentioned book at pages 794 and 795 at the last column of the Table.

viously mentioned Institution of Civil Engineers Rules? And, again, why did he state that "while the piston engine must release at about from 5 to 6 lbs. pressure, the turbine can utilise vacua up to 29½ inches, the cost of condensation being but a small fraction of the additional gain?" Marine engineers had arrived at the conclusion, after many years of trial and error, that the most economical working vacuum for their reciprocating piston engines was about 25 inches when the barometer stood at 30 inches; or, say, a mean exhaust steam back-pressure of 2½ lbs. absolute, whatever it might be at the point of release. And, most certainly, no marine steam turbine ever carried for hours on end, and still less for days, a vacuum of 29½ inches. If, however, a marine steam turbine could keep up a constant vacuum of 28 inches, the back steam pressure would have been about 1 lb. absolute per square inch, and the temperature of the condensed steam by the time it reached the feed pumps would have been 100 degrees F.; whereas, with the reciprocating engine vacuum of 25 inches, the back steam pressure would have been about 2½ lbs. absolute per square inch, and the temperature of the condensed steam, by the time it reached the feed pumps, would have been, say, 130 degrees F. Consequently, every lb. of feed water pumped into the boilers in the latter case contained 30 B.Th.U more than in the former case. In other words, if a good triple-expansion reciprocating marine steam engine of, say, 10,000 I.H.P. be compared with an equal powered good steam turbine, and with their respective vacua as stated above, it would require about 4½ tons of good coal per day to make up for the less heat in the boiler feed water derived from the lower pressure exhaust from the turbine. As far as mere coal economy was concerned, this was the way that the shipowner and the sea-going marine engineer looked at this question. And from the Tables submitted by Mr Speakman it would be clearly seen that although the coal used by the turbines was in several instances slightly greater, upon the average it was just

about equal to that of reciprocating marine engines doing the same work. The speed, and hence the power of the turbine vessels was greater, and many other acknowledged advantages would make them the favourite passenger vessels. What was saved by the turbine per lb. of steam used when of the same initial pressure and temperature, when compared with a reciprocating engine of the same power, was to an appreciable extent lost again in the feed water heat units which had to be imparted thereto by using so much more coal. There was, however, one great advantage with marine as well as with land turbines, viz.—that if occasion called for it they could be overloaded to a far greater extent than could be done with reciprocating engines. There were many other points which he (Prof. Jamieson) might have drawn attention to had time permitted. He would, however, thank Mr Speakman for submitting such an excellent and well-illustrated collection of the applications of the Parsons turbine for both land and marine purposes, as well as for the many useful Tables of actual results, which gave a good, clear idea of the present status of these steam turbines.

Mr. R. T. Napier (Member) remarked that the Author quoted torsion meter experiments conducted on a steamer by two German gentlemen who came to the conclusion that, at times, the propeller was driving the engine. This would mean that, at the times in question, the turning moment on the shaft was not sufficient to overcome the ordinary running friction of the engine. As it was usually admitted that 10 per cent. was a fair allowance for marine engine friction, then the minimum turning moment, if the experimenters' conclusions were true, must have been less than $\frac{1}{10}$th of the mean turning moment. Like others, he (Mr Napier) had drawn down, from indicator cards, diagrams of tangential pressure on the crank pin during a revolution. He recalled one of a two-cylinder compound engine in which, so far as memory served him, the minimum tangential pressure was not less than half the mean.

He had not drawn down such a diagram for a three-cylinder compound engine—doubtless other Members had—and he was prepared to learn that with such an engine the minimum tangential pressure did not fall below the mean by more than 25 per cent. He suggested that the experimenters referred to had not realised that a shaft acting under a varying turning moment was, regarding the amount of twist, comparable with a beam under a live load with respect to the amount of deflection. A beam under a dead load deflected to a definite extent, while one under a live load might one instant deflect to twice the extent of the former, and the next instant the deflection be nil or negative. In the matter of loss of heat; in steam engines of ordinary type, the temperature at every point inside the cylinder rose and fell periodically from that of the admission to that of the exhaust; the period, in the case of a high speed engine, being a fraction of a second. It seemed to him impossible that the metal of the cylinder could receive and part with heat to any considerable extent in such a short space of time. It was more reasonable to suppose that the metal assumed at the outset a temperature something like that of the average of the contained steam, and raised but little therefrom. With a Parsons turbine it was otherwise, as the temperature of the steam must be fairly constant at every point in the length of the casing, with a difference of temperature of, perhaps, 300 degrees F. between the admission end and the exhaust. There must be a continuous flow of heat along the casing walls, and this, doubtless, did a little towards keeping the steam dry. Professor Jamieson had anticipated what he intended to say, that a hot feed must be of as much importance to the boiler supplying steam to a turbine, as it was to the boiler supplying steam to other engines.

Mr. Robert Royds, M.Sc. (Member) said that the Author had referred in the opening pages of the paper to the thermal losses in the ordinary engine. He (Mr Royds) thought it was quite time that leakage was put at least on a level with initial

condensation. It was now pretty well known that leakage had, at any rate, as great an effect on the missing quantities as initial condensation. In Fig. 10, the steam consumption was plotted on a kilowatt base for a 300 K.W. turbine, which was presumably designed to work at about 3000 revolutions per minute. He would like to ask Mr Speakman if he could explain why at about one-quarter full load the turbine showed practically the same economy at all speeds? The velocity of the turbine blades, relative to the velocity of the steam would have an influence upon the economy, and he could not understand why with a one-fourth load the turbine showed nearly the same efficiency at all the speeds given on the diagram. With respect to spinning mills, Mr. Craig had just said that by the adoption of turbines their production had been increased by about 10 per cent. He could not understand how the production could be so increased, unless the speed of the line shafts, or its equivalent in the machinery, had been increased by 10 per cent. He knew that in spinning mills the machinery was capable of going the full time, and he could not see how this increase of production could be obtained except by an increase of speed, which increase could have been obtained from a reciprocating engine.

Mr C. RANDOLPH SMITH (Member) asked to what extent the steam turbine was used for marine purposes to-day? The enormous amount of public interest with which this new form of motive power had been received, not only within the ranks of the profession, but also by the general public and press had, he thought, created a sort of nebulous impression in the lay mind that the more ancient form of reciprocating engine, if not totally extinct was, at any rate, in its death throes. That impression had been to some extent fostered by utterances and opinions from within the profession, inspired, doubtless, by the great enthusiasm with which all must view Mr Parsons' magnificent triumph. These utterances from within the profession were exemplified in a paragraph which came under his

notice in a recent publication, by a distinguished naval architect. Speaking of the impressions created by the vision of the little "Turbinia" racing along at 35 knots during the Naval Review at Spithead in 1897, he said:—"Those who saw that little streak of steel flash across the water, and who had a spark of imagination, saw in the near future a revolution in steam propulsion which would make all the skill and experience that the marine engineers had acquired in the reciprocating engine, a thing nearly as useless as that of the skill of the armourer who clothed the tin-clad knights of old for jousts." Consider for a moment what were the facts to-day —nearly ten years after that vision at Spithead. He ventured to state them as follows:—*Firstly*, There was no generally authenticated record of turbines justifiably and successfully fitted in any vessel below 18 knots speed. *Secondly*, he thought it was probably within the mark to say that in the world's steam ship tonnage, vessels of 18 knots speed and over did not exceed one per cent. of that tonnage, and *Thirdly*, therefore, the engineing of 99 per cent. of the world's steamships remained to-day as a problem for the reciprocating engine-maker to handle. If these statements were facts, or even approximately accurate, he ventured to think that it was a little too soon for the ancient armourers to throw down their tools and to write "Ichabod" above the doors of their workshops. He would like to say, however, that these remarks were not dictated by any bias in favour of the reciprocating engine. He was an advocate of the turbine, as against the reciprocating engine, in its proper place, but he thought that when the *status* of the turbine was under discussion it was as well that all the facts should be looked in the face so that the deductions drawn might not only be in true proportion, but rest on a solid basis of fact. He would only add that in presenting such facts to the Institution, Mr Speakman, in his latest paper, had added to that debt of gratitude which the engineering profession

already owed him for much enlightenment on the most important engineering development of modern times.

Correspondence.

Mr J. J. O'NEILL (Member) agreed with Mr Speakman that the turbine had come to stay, but what had, however, surprised him most was that the introduction of a high-speed motor for propelling ships should have been so long delayed. Some twelve years ago, he ventured to read a paper before the Naval College at Annapolis dealing with the question of propellers and their influence on the designs of ships, in which it was clearly and unmistakeably shown that high speeds could only be secured efficiently by high revolution of machinery coupled with relatively small propellers. It was then urged that the propeller was the vital element of the design, and he still thought this held. Subsequently, in another paper, it was suggested that on power-speed grounds, a vessel of the dimensions of the "Paris" could, provided high-running machinery were introduced, realise the speed performance of the "Campania," although this latter vessel was 100 feet longer. It was stated that all the Atlantic liners then running could be efficiently driven at higher rates of speed, if the question of type of machinery were more carefully considered. It was pointed out that whilst the weight of engines of merchant vessels was about one ton per 6 H.P., and warship machinery about one ton per 12 H.P., no great exhibition of courage was necessary to introduce machinery of about the mean between the two practices, and thus secure quicker running, and, incidentally, much lighter machinery. Some years later, curiously enough, there was launched from the same berth as the "Campania" the "Good Hope," which, on 100 feet less length, with the same power, secured a higher rate of speed. In his opinion, what delayed the advent of high-running machine was the undue importance attached to form.

There had always been a mystery surrounding "form," and in the eager pursuit of, and the fatuous admiration for it, all other features which he ventured to suggest were more important, had been lost sight of. Essential qualities had been sacrificed for "form," forgetting that it was only one factor of any design, and by no means the most vital. Within wide limits of shape, alterations could be permitted without increase of resistance, and the matter, therefore, of the attainment of speed had become almost entirely an engineering one. Of what use was it to go into the refinements of shape in order to reduce resistance one or two per cent., when the introduction of motive power brought factors with it incapable of estimation within 40 per cent.? and even then "forms," after undergoing this excessive refinement—"forms" which, they were told, as the results of experiments, could not be driven economically at higher speeds than designed—had secured, as stated by Mr Speakman, as much as seven knots in excess of anticipation. Had the merchant engine practice approximated the war engine practice, the immediate necessity for the turbine would not have arisen. The demand for high speeds, however, had now become imperative, and turbines bid fair to meet all requirements; for up to the present their performance clearly showed their possibilities. Now that the capabilities of the machine had been demonstrated—What was to be done with it? Its chief *raison d'etre* was the high rotation which it permitted, a rate limited only by the phenomenon of cavitation. Let not its development be handicapped, as was the case of the reciprocating engine, but let the full benefit of its capability be utilised. Referring to the Tables at the end of Mr Speakman's paper, giving comparative results between turbines and reciprocating engines, he should not expect any great advance between the warship reciprocating engines and the turbines, seeing that the former had always been run considerably more rapidly than in the merchant type. Comparing, however, the "Amethyst" and

Mr J. J. O'Neill.

"Topaz," vessels of identical form, the information distinctly showed, that within the designed limit of power and speed, turbines secured no advantage over reciprocating engines. If the curve of power were plotted, it would be seen that both ships required the same power to obtain the same speed, but it was also true on the same weight a greater power was generated, and an increase of 1½ knots in speed secured. This only showed, however, that like very many of their predecessors, the form of the vessels permitted higher speeds to be obtained, provided suitable means were employed. It was to be regretted that Mr Speakman was unable to give the powers in connection with Appendix F, as their absence prevented a true comparison being made; but even here, on coal consumption grounds, there seemed to be no apparent advantage gained by the turbines. However, if Mr Speakman would give the average powers and speeds for the various ships, one could see if an 8 per cent. larger ship had been driven with the same power, and whether 10 per cent. increase of speed was a measure of the advantage due to the introduction of the turbine. It was, however, when the information given in Appendix E was examined that one saw the real case for the turbine, where, in comparing vessel No. 1 with the "Viking," the enormous gain accruing to the turbine was apparent. In the case of the "Viking," it would be difficult to see how its performance could be excelled on the dimensions. The form of this vessel and No. 1 practically agreed; the increase of length in No. 1, although two feet deeper, counterbalanced the reduction of draught and decreased length in the "Viking," yet showing an increase of 10 per cent. in speed result; he ventured to say, primarily from the introduction of the new motive power with the consequent alteration of circumstances brought about by the high rate of revolution. It was to be hoped that when data was obtained of the performance of the "Caronia" and the "Carmania," that the relative merits of the two engines would be disclosed. What all anxiously

wanted to know was, as the vessels were identical in form, if a similar power in the "Carmania" secured a greater speed than in the "Caronia." Again, it would be interesting to learn if the turbines *per se* had been fitted to the propeller shafting of the "Caronia" instead of the reciprocating engines —all other conditions being similar—whether the turbines were more efficient? Would the same power secure the same speed? Further, assuming that the reciprocating type of machine, as fitted in the "Caronia," was the best possible and with the highest rate of running considered safe, would it not be desirable to run the turbine engine at its highest rate with suitable propellers in order to compare the difference of conditions, and thus be able to compare the speeds obtained with similar powers, and judge the real capabilities of the turbine? Mr Speakman mentioned that the large Cunarders now completing must attain a trial trip speed of 25¼ knots, and an average sea speed for a voyage out and home of 24¾ knots. These figures led one unconsciously to the assumption that, in determining the dimensions of the vessels, considerations other than speed-power ones must have influenced the design. He would like Mr Speakman, if he could do so without divulging secrets, to state whether the rate of running the turbines in these vessels in any way prevented their full efficiency being obtained, or if the power, based presumably on the speed of rotation ultimately decided on, had to be increased to 70,000 on a vessel 160 feet longer than the "Campania;" because, if he read the paper aright, the introduction of turbines into a vessel of the "Campania's" dimensions and form ought to secure the speed contemplated without difficulty. What one really wanted to know was—What could the turbine do under precisely similar conditions to that which obtained with the reciprocating engine?

Mr H. L. S. Nicol (Southampton) considered that the general adoption of the turbine system of propulsion by the Admiralty seemed to have been fully justified by the results

recently obtained from H.M.S. "Dreadnought," and from the coastal destroyers, and judging from the considerable amount of data now available from the successful speed, consumption, and manœuvring trials, those most concerned might at least feel that they had taken a step in the right direction. The change in the engine room should not obscure the simultaneous and remarkable change in the stokehold, brought about by the use of oil fuel on such an extensive scale; both innovations had affected a considerable saving in the number of hands required and in the attention necessary, while as to economy, an oil consumption of 1·5 lbs. per equivalent I.H.P. per hour had been obtained on H.M.S. "Gadfly"—the first turbine driven coastal destroyer to run trials—which, by the way, obtained a speed of about 1½ knots in excess of that fixed by the designers. Speaking as an ex-marine engineer, he would be only too glad to see the combination of the two systems universally adopted. To add to the efficiency of the system he would like to couple superheat and more efficient condensing plants. In the turbine cylinder there was no serious initial condensation, as the walls with which the steam came into contact did not change in temperature. On the other hand, water due to priming, or that formed by condensation due to work done, produced in its passage through the blades a large amount of steam friction, thereby reducing the mechanical efficiency. Superheating the steam would reduce this loss, as an example of which he would remark that with steam containing only 2 per cent. of moisture at the H.P. cylinder inlet, the consumption was increased from 4 to 5 per cent. The superheater should consequently be arranged to give an extra temperature of at least 50 deg. F., which would be equal to a saving of about 8 per cent. of the steam used. Such a temperature, in fact even a higher one, would be quite safe to work with in view of the excessive blade tip clearances, so frequently allowed in marine practice. Messrs Parsons & Co.'s new

blading in which the tips were cut down almost to a knife edge, however, certainly admitted of slightly finer clearances, and at the same time was suitable for work with superheated steam, as in the case of serious cylinder distortion—a frequent occurrence when high temperatures were used—the blades would relieve themselves without causing any trouble. And as far as a more efficient condensing plant was concerned, he fully concurred with the Author's remarks that the upper tubes in the condenser should be spaced much wider apart to allow an easy flow of steam round them. By doing so, and thereby allowing the steam better access to the centre of the condenser, and with an allowance of from three-quarters to one square foot of surface per H.P. and an exhaust area allowance of 400 feet per second, at 25 inches vacuum, a condenser properly made should meet all requirements. Something was wrong when only 23 inches of vacuum could be obtained on turbine vessels, and one should not hasten to blame either condenser or pumps. In the case of a reciprocating engine, the engineer in charge had only to trouble about his L.P. gland, his main exhaust pipe and, perhaps, one or two auxiliaries; but in the case of turbine machinery, each cylinder had a direct or indirect connection with the condenser, by the glands, etc.—a condition of affairs that was frequently accentuated by the fact that the cruising turbines were often run in a vacuum. In the case of the glands this might be overcome by increasing the volume of steam supplied thereto (not the pressure) either through the leak-off pipes, or separately, which might give better results, and by keeping a fair amount showing at the glands. This steam, also, had a beneficial effect by keeping the air in the engine room moist, as well as in assisting the condenser. It was also of interest to note that other features required very careful supervision and adjustment. The necessity for the very best workmanship and no other had not been insisted on in the paper, although he knew the Author was fully alive

to such a vital point. Most especially did this apply to condensers; the greatest care should be taken to make all joints perfectly tight. Turbine work called for accuracy and excellence of workmanship of a most refined degree, and the little trouble involved in training a staff to the higher standard of proficiency required was sure to be amply repaid.

Mr A. Scott Younger, B.Sc., (Member) considered that the paper did not lend itself to criticism, but its historical value made it very welcome to many engineers. The rapid development and present position of the turbine were clearly stated, and the comparative results of different vessels fitted with turbine installations given at the end of the paper, made it specially valuable to marine engineers. One of the most interesting sections was that dealing with the measurement of the power developed, and reference, of course, was made to the Denny-Johnston torsion meter, which was commonly used, and gave good results. It was clear that this method was reliable, when the shaft had been calibrated for torsion before being used, but in dealing with larger shafts which could not well be calibrated it was not clear that the results obtained could be accepted without question. In this connection he thought that the Members would be interested in hearing of a hydraulic transmission dynamometer designed by himself for the purpose of indicating the power of marine engines. The essential idea was to have one of the shaft-couplings without bolts, but on each half of the coupling was secured a substantial cast steel disc, one disc having two or more hydraulic cylinders, the plungers of which engaged with suitable stops on the other disc. The ends of the cylinders were connected to the shaft, which was hollow right back through the turbine to the inner end, where a short pipe fixed to the turbine shaft revolved in a chamber filled with water or oil, and maintained under pressure by means of a pump or accumulator. It was clear that the movement of the plungers would cause this pressure to

vary, and its amount at any moment could be read by means of a specially constructed gauge or indicator. The horse power where two cylinders were used was:—

$$\text{H.P.} = \frac{d^2 \times p \times r \times n.}{40{,}100} \text{ where,}$$

d = The diameter of the hydraulic cylinder in inches.
p = Hydraulic pressure in pounds per square inch.
r = Leverage of cylinders about the centre of the shaft in inches.
n = The number of revolutions per minute.

It was clear that in any particular design, d, p, and r, might be varied as found convenient, and that the higher n was, the smaller the apparatus could be made. This method involved certain errors, viz.—(1) The difficulty of measuring the pressure accurately probably introduced the greatest error, but a special form of mercurial pressure gauge operated by a differential piston had been designed, which it was thought would overcome this difficulty. (2) There was an error due to the centrifugal force of the fluid in the cylinders, which increased the pressure without affecting the reading of the gauge. This error was always positive, and varied as the square of the number of revolutions, and could be accurately allowed for. (3) The error due to the friction of the rams in the hydraulic cylinders would eliminate itself in practice. A stroke of the pressure pump would urge the rams forward, during which the friction would increase the gauge reading. On stopping the pump the least leakage would reverse the motion of the rams, during which the friction would reduce the gauge pressure, so that any diagram taken with a continuous line would show the excess or defect of pressure, the mean of which would be the pressure required. These friction pressures would only be recorded if they went beyond the limit of error in the indicator used.

Mr E. M. Speakman, in reply, expressed his regret that indisposition had unfortunately prevented him from reading the paper, and then thanked the members for the manner in

Mr Speakman.
which they had received it. Dealing with the points in the order in which they were raised in the discussion, he immediately found himself unable to agree with most of Dr. Mellanby's remarks. In the first place, the paper was not written to advocate a cause as suggested—he particularly wished that to be understood—but to place on record in the proceedings of the Institution, some definite salient facts connected with the development and present status of the steam turbine. He had, therefore, been forced into descriptive generalities on some points on which he would have elaborated with greater detail had the paper been of a more detailed nature and less comprehensive in the range of subject dealt with. Dr. Mellanby, he thought, had been unjust in his remarks on turbine economy, because he not only quoted results from what was obviously, as shown by the tests, a badly proportioned turbine for its work, but also those of a reciprocating engine working under unique thermal conditions. He did not think that there would be any difficulty whatever in equalling the performance of this engine with a properly proportioned steam turbine working under the same conditions. Did Dr. Mellanby really believe that after a few months commercial work the piston engine referred to would exhibit the same degree of economy? He hoped that later on he might be able to cast some light on this subject from data derived from the engine in the Technical College. The service results from marine work threw some very interesting lights upon this question of *sustained* economy, and Dr. Mellanby was not, he thought, in possession of these figures, or he would not have taken quite the view that he did. Again—and this also applied to one of Prof. Jamieson's remarks—the best consumptions of most turbines remained unpublished; the results from the Frankfort turbine were now some years old, and had repeatedly been beaten since the trials referred to were made. Dr. Mellanby should not judge turbine power stations from the Lot's Road installation, where the maximum thermal condi-

tions were out of date at the time the station was built, and where the turbines were of a hybrid design that could not reasonably be expected to give good results. The margin for improvement was cut considerably finer in some of the big Continental stations—say, St. Denis near Paris, or at the Oberspree station in Berlin—and if Dr. Mellanby would remain during the peak hours in a big turbine station handling traction work, he would certainly not say that the chief weak point in the Parsons' turbine was its inability to cope with overloads. He stated that turbines were made too large for their working loads—Why? On the one hand they might have to work at half power for several hours, then between five and seven p.m. (when for traction work the load was worst) the guaranteed overload capacity of 50 per cent. might be required every few minutes. Would a reciprocating engine deal as well with such conditions? Of course not; and if the margins required were less, the turbine would be made to suit. But the station engineer having got an elastic machine proceeded to stretch it; hence the exaggerated proportions which were sometimes found to compare unfavourably with a special engine under test conditions for which they had not been proportioned. If Dr. Mellanby would refer to Fig. 8 or 9, he would see that a representative turbine possessed a wide range of economy on either side of full load, and he (the Author) hoped that Dr. Mellanby would try and collect some equally good results from piston engines for presentation to the Institution. He thought perhaps that the variance of opinions on some of these points was more apparent than real—possibly Dr. Mellanby viewed the matter from a more theoretical point of view—but even with this concluding suggestion he was unable to agree. He could assure his critic that the turbine testing work of any one of four or five turbine building companies would more than glut the capacity of any dozen technical schools, and while he did not underrate the value of research work in conjunction with practice, he did not see how commercial experimental work

Mr Speakman.
could be satisfactorily undertaken except at the works. And the standard of research there was every bit as high as it would be if performed by the students of a technical college. In referring to the de Laval turbine, he was sorry that he had conveyed the impression that these machines could not be made in larger sizes than 250 K.W., though at the time of writing he did not know of any that were at work. He was obliged to Mr Rowan for this correction, and also to Mr Craig for the additional information conveyed in his remarks. He thought that Prof. Jamieson had not grasped the meaning he intended to convey in his (the Author's) section on thermodynamic energy conversion, and the same applied to some of Dr. Mellanby's remarks. He was sorry not to have been able to fight this question out in person, for there would have been a strong debate on the subject, and he felt that a purely written reply was an inadequate method of dealing with the criticisms. If they would turn to his paper of the previous year, they would find the statement that "in the turbine blades themselves the efficiency was between 70 and 80 per cent." As a matter of fact, it might be even more than this; there was a close analogy to be obtained from water turbine systems, in some of which efficiencies of even 88 per cent. were obtained. Prof. Jamieson neglected to point out in his remarks—as he did do when commenting on Mr Parsons' paper to the Institution of Civil Engineers—that the efficiency of the Frankfort turbine "would have been considerably higher" had a higher vacuum been employed. He must remember that extraordinary conditions prevailed on the test of the 500 H.P. engine—Would Prof. Jamieson undertake to put 400 degrees F. superheat on a 4000 H.P. reciprocating engine? He saw no reason to withdraw what he said on page 16, viz.—that "The greater economy of the turbine therefore arises from the possibility of more efficient utilisation of heat as well as from the greater thermal range available"; and neither Dr. Mellanby nor Prof. Jamieson had controverted this statement. In fact, the data given in

Fig. 9, and quoted by the latter, seemed to him to completely disprove Dr. Mellanby's assumption that the reciprocating engine was the more economical heat engine. In reply to Mr Napier, he would remark that with regard to the torsion meter experiments quoted, those by Dr. Föttinger were undertaken on vessels built by the Vulkan Company, while Herr Frahm, who was the original investigator, carried his experiments out quite independently. Mr Younger's apparatus was hard to understand without a diagram, and seemed to be rather cumbrous and uncertain. Mr C. R. Smith asked to what extent the turbine had been adopted for marine purposes. Up to the end of 1906 there were practically 1,300,000 H.P. built, building, and on order, of which about 400,000 H.P. were actually delivered and at work, while by the end of 1907, the power completed would be about 700,000 H.P. The French Naval Authorities, after an extended investigation, had recently placed an order with the Parsons' Foreign Patents Co. for turbine machinery for the six new battleships of the 1906-7 programme, which was an indication of their view of the matter; and there was every indication of a very large development on the Continent in the near future. In referring to the other considerations raised by Mr Smith, he would draw his attention to the following points. First, that both the "Rewa" and "Maheno" were successful examples of freight carrying vessels working below 18 knots speed, while the "Carmania" on service ran between 17·5 and 18 knots. The "Lorena," "Mahroussah," and "Albion," all worked below 18 knots, the latter vessel having a trial speed of only 15. Then, again, while he agreed with Mr Smith that when the status of the turbine was under discussion it was as well that the facts should rest on a solid basis, he could not accept the second and third suggestions Mr Smith made. To begin with, vessels of 18 knots speed and over formed a very considerable proportion of the world's tonnage. In Britain, where all naval vessels were over 18 knots, the proportion of warship to merchant tonnage

Mr Speakman.
turned out each year was 10 per cent., based on an average of the last seven years, while the corresponding proportion of warship H.P. to total H.P. in the United Kingdom was nearly 20 per cent. Did Mr Smith, or any other member, realise the fact that, in the two Cunarders and the "Dreadnought" the combined power was 9 per cent. of the total H.P. in the United Kingdom for 1906? The following facts of tonnage and horse power might, he believed, give a better idea of the relative position. Between 1900 and 1906 inclusive, the average total H.P. of engines constructed in the United Kingdom was about 1,440,000 (1,816,000 in 1906) and the average warship H.P. was 284,000. The total steam tonnage per year averaged 1,645,000, and the warship tonnage was between 9 and 10 per cent. of this, or about 154,000. Now, the Parsons turbine was at present the accepted engine for the Royal Navy—nearly half a million horse power had been built or was under construction for the Admiralty—and for warships alone the proportionate position of the turbine was far more than Mr Smith suggested. The total equivalent H.P. of turbine steamers launched last year in the United Kingdom was about 315,000, and this was equivalent to 17·35 per cent. of the H.P. output. But no attempt had seriously been made by turbine builders to compete with reciprocating engines below 17 knots. If Mr Smith made a list of merchant vessels of 18 knots and upwards built during the last three or four years, he would be astonished at the scarcity of vessels engined with reciprocating machines. The following Table showed the marine turbine position up to December 31st, 1906:—

Type of vessel.	Merchant steamers.	Yachts.	Warships.
Completed,	34	7	14
Building,	16	1	49
	50	8	63
Total of ships built and building,			121
Total equivalent I.H.P.,			1,300,000

And it must be remembered that the commercial advent of the turbine dated from the "King Edward," which started work in 1901. He (the Author) certainly felt that turbines would be the standard engine for all warships before very long, and though exact figures for the I.H.P. of the whole world were difficult to arrive at, he believed that nearly 50 per cent. of the world's marine H.P. was to be found in warships. In any case, owing to the fact that for large fast liners, warships, channel steamers, etc., the selling price per H.P. was so much greater than in small slow cargo vessels, the turbine certainly occupied a very much larger percentage of the dividend earning volume of engine work than was generally realised. And it was not so much with the past that the present-day engineer was concerned as the immediate future. Mr O'Neill's remarks were, he thought, of much interest, and he fully agreed with him as to the important influence of the propeller on the design. In reciprocating work, many channel steamers and some cargo vessels could advantageously have had faster running engines; but when it came to trying to reduce Atlantic liner engine weights he doubted the advisability of such a step. To reduce weight by increasing revolutions was equally attractive to the turbine engineer, but he was limited by the essential propeller area; the reciprocating engine was limited by questions of cylinder volume and length of stroke, and there was no doubt about the advantage of a long stroke for a big engine, especially on Atlantic liners. In any case, turbines would be lighter than much faster-running reciprocating engines, and, further, they had much greater factors of safety. Warship engines were lighter than merchant ship engines for other reasons besides higher revolutions; the factors of safety were cut finer, and unlike merchant engines, they were not designed for maximum economy at full speed; and when Mr O'Neill suggested running the 500-ft. "Good Hope" at full speed, he could not help wondering how long the engines would hold together. To *maintain* the power they had to be amply strong,

not merely sufficient for a 12 hours' burst. Again, as far as "form" was concerned, it was one thing for a smooth-water cruiser like the little "Amethyst" to obtain a speed-length ratio of 1·25 on trial, but it was a very different matter for a liner that had to maintain her speed for a week, and even with turbines it would probably be commercially inadvisable to try to exceed a ratio of $\frac{V}{\sqrt{L}}$ =0·9 to 0·95 on the Atlantic. He would have liked to have added more data to the Table in Appendix F, but the powers were not available; the owners might be given credit for knowing what suited them best, and they were just about to order another turbine vessel. In concluding his remarks, Mr O'Neill suggested that the "Campania" might be driven at 25 knots with turbine machinery—very probably she could, though the larger power would need a larger engine room; but the great difficulty lay in finding space for the boilers, and probably this would be the case for some time, until marine engineers had the sense to break away from tradition and adopt water-tube boilers and oil fuel. Mr Nicol evidently had something of this nature in his mind, but he went even further in advocating superheat; the difficulty of applying this lay in the superheater rather than in the turbine. In concluding his reply, there were a few other remarks he wished to make. It was obvious from what had transpired in the discussion that the status of the steam turbine as opposed to that of the reciprocating engine was not generally realised in the profession. The Parsons type for land work alone to the end of 1906 was being built and had been delivered to the extent of nearly 2,000,000 H.P., of which about 850,000 had been constructed on the Continent and 450,000 in the United States. The figures for the other types were hard to arrive at, and he forebore to give mere approximations. Their combined aggregate did not reach this figure. He hoped that perhaps a fuller appreciation of these figures—especially in view of the fact that over 97 per cent. had been con-

structed since 1900—would go some way towards convincing members that the turbine did not so much need advocacy as a dispassionate review of its position and the reasons that had influenced its rapid development.

On the motion of the PRESIDENT, a vote of thanks was accorded Mr Speakman for his paper.

SUCTION GAS ENGINES AND GAS PLANTS.

By Mr Hugh Campbell (Member).

SEE PLATES VI., VII., AND VIII.

Read 20th November, 1906.

It is not my intention in this paper to deal with either the origin or development of the gas engine or suction gas plant, but to deal solely with their modern aspect and the condition of both as they exist to-day.

Most engineers have become more or less familiar with gas engines during the last thirty years, but it was not until their great development, which took place mainly on the Continent for use in conjunction with blast furnace gas, that the eyes of engineers, outside those immediately concerned, were opened to the fact that this form of motive power was destined to play a very important part in that industrial and social evolution which is constantly at work in our midst.

The exhibition of the 600 B.H.P. gas engine in Paris in the year 1900 gave the public, as well as engineers, an actual living idea of what a large gas engine was like. About the same time as these developments in large gas engines were taking place, an invention, which, like many others, had been born before its time—*i.e.*, born before the public concerned could grasp its true significance—was being resuscitated in a more practical form than that in which it had previously been presented. This was the suction gas plant, which, so far as our present information goes, was first invented and made by M. Leon Benier, of Paris, in the year 1894.

The development in the manufacture of large gas engines has been great, and will, no doubt, be still greater in the

future; but great as it has been, and important and far-reaching as its effects will be in industrial economy, I believe that the introduction of the suction gas plant is causing, and will cause in the near future, a greater revolution in ideas and practice regarding motive power than has occurred or will occur in connection with the development of large gas engines, which are mainly used at the present time in conjunction with blast furnace gas.

Time this evening will not permit of giving in detail the reasons for my strong belief in the future of the suction gas plant, except briefly to state that its very high economy, extreme simplicity, its cleanliness, and the small amount of space it occupies, are sufficient to commend itself to power users, and to engineers.

It must not be thought, however, that the suction gas plant and gas engine will be allowed to occupy the premier position in the motive power world without considerable opposition and without challenge. The most enthusiastic supporter of gas power knows that quite well; for since its introduction, and especially since it began to affect the returns of the makers of steam engines and boilers, and of gas and electricity works, those connected with such concerns have not forgotten to let the engineering and outside public know what they think about suction gas. Editors of technical papers and engineering societies have offered ample opportunities for editorials, letters, and papers, all with the sole object of enlightening the mind on suction gas, but particularly occupied with its disadvantages, and the opponents of this system intimate to the public that its cost of working is not so economical as the makers of suction gas apparatus would lead them to believe.

Unfortunately, perhaps, some suction gas plant makers have given these interested gentlemen a lever to use against them. The phrase "20 B.H.P. for a penny" is no doubt well known to all, and this phrase is the lever in question. Personally I

have always objected to such a phrase, as while it is strictly correct in many circumstances, it is not at all capable of anything like universal application, but the opponents of suction gas wish to read into such a statement something more than it is or was meant to contain. They say that the penny does not include the total cost of the 20 B.H.P.; for instance, that it does not include cost of water, stand-by losses, attendance on the engine and plant, depreciation, interest, and so forth, but such a view is not a fair one.

The statement referred to is quite intelligible, and is as easily understood by power users as "electricity for motive power purposes one penny per unit," or that a certain boiler, under certain circumstances, can raise so many gallons of water to boiling point with so many lbs. of coal. Nobody believes that the penny per unit or the lbs. of coal is or are the total cost of either form of motive power, neither are such statements intended to imply that they include such. If such statements referring to the cost of electricity and steam raising be permissible, and be considered fair, then why is it that objection is taken to similar phrases when applied to suction gas? This naturally brings me to the question of what is the cost of working a suction gas installation.

In a paper which I read before the Institution of Electrical Engineers at the University, Leeds, just two years ago, I stated the actual capital costs and the actual working costs of a steam-driven and a gas-driven station—both stations being of exactly the same size and capacity, and under the same management, so that each afforded a fair comparative test as to the economy of working. These stations are situated at Guernsey, and since 1903 the gas engine and steam engine stations have been worked separately. In Tables I. and II., the working costs of each of these stations are given for the year 1905, and the first quarter of 1906, from which it will be seen that there is practically 45 per cent. economy in the working of the gas-driven station over that of the steam-driven station.

The figures have been supplied to me by Mr Arthur H. Bird, the engineer and manager of the Guernsey Electricity Supply.

TABLE I.

GUERNSEY STEAM AND GAS-DRIVEN ELECTRIC STATION.
COSTS OF WORKING, 1905.

	Steam Plant. Lighting Load. Per Unit Generated.	Gas Plant. Power Load. Per Unit Generated.
Coal, including steam pumps, air pump, forced draught at steam station, ...	·436	·200
Oil, waste, water, stores, ...	·037	·042
Wages, ...	·214	·133
Average hours of attendance to run plant when necessary, per day, ...	18	13
Repairs—Buildings, machinery, transformers, main accumulators,... ...	·250	·123
Total works costs, ...	·937	·498
Units generated,...	500·43	718·858
Average per cent. of full load at which engines were loaded during the time of running, ...	68½%	86¼%
Coal used per unit generated, ...	4·97 lbs.	2·21 lbs.
Price of coal in bunkers—Washed anthracite peas used at each station, ...	16s. 2d.	15s. 6d.

TABLE II.

GUERNSEY STEAM AND GAS-DRIVEN ELECTRIC STATION.
COST OF WORKING, JANUARY TO MARCH, 1906.

	Steam Plant. Lighting Load. Per Unit Generated.	Gas Plant. Power Load. Per Unit Generated.
Coal, as in Table I., ...	·391	·151
Oil, etc., „ „	·027	·046
Wages, „ „	·209	·136
Repairs, „ „	·207	·176
Total works costs, ...	·834	·509
Units generated, ...	164,323	162,438
Price of coal in bunkers, ...	16s. 2d.	15s. 6d.

The Campbell Gas Engine Company installed at Broxburn a suction gas engine and gas plant for the electric lighting of that district, and, after completion, tests were made on behalf of the local authority by their consulting engineer, Mr. Alexander Lindsay, Glasgow, and the engineer in charge of the station, Mr. G. G. Wright. The results which were obtained by these gentlemen are given in the Table III.

TABLE III.

FUEL COST OF AN 80 B.H.P. GAS ENGINE AT BROXBURN ELECTRIC POWER STATION.

Engine developing - - - -	79·24 B.H.P.
Duration of test run - - -	6·75 hours.
Total fuel consumed - - -	405 lbs.
Total units generated - - -	376.
Fuel consumed per kilowatt - -	1·07 lbs.
Cost per kilowatt - - - -	·06d.
Fuel consumed per B.H.P per hour	·75 lb.
Cost per B.H.P. per hour - -	·05d.
Cost of anthracite coal in bunker -	11s. 6d. per ton.
Cost of 20 B.H.P. - - - - -	1d.

Lest this table of cost should be considered too favourable for the suction plant, either because of the load which the engine carried throughout the test, or that the test itself was too short, I wrote to Mr. Wright, in view of this paper, to afford me his working costs for the ordinary station conditions of load, and he has been good enough to send me the following:—

TABLE IV.

COST OF WORKING BROXBURN ELECTRIC POWER STATION FOR OCTOBER, 1906.

Twenty-nine Working Days.

Total fuel consumed - - -	6 tons 13 cwt.
Total units generated - - -	6917.
Duration of run per day - -	7½ hours.
Units generated per day - -	231.
Consumption of fuel per hour -	69 lbs.
Units generated per hour - -	33.
Consumption of fuel per B.H.P. per hour	1·25 lbs.
Cost of fuel per B.H.P. per hour -	·08d.
Consumption of fuel per unit -	2·09 lbs.
Cost of fuel per unit - - -	·138d.
Consumption of oil - - -	10 gallons.
Cost of oil per gallon - - -	2s. 3d.
Cost of 20 B.H.P. - - - -	1·6d.
Cost of fuel in bunker - - -	12s. per ton.

Mr Wright informs me that the whole of the above data are from ordinary working conditions during the month of October last, the producer being simply shut down at the end of the day's run, and started up the following day after the gas generator fire bars were first cleared of any ash—the generator fire being clinkered once a week.

Considering that the gas plant was standing 16½ hours out of the 24, doing nothing, and that the above figures include all

the standby losses, and that the engine was working only at about half load, it is a remarkable result that under such conditions the fuel consumed does not cost more than ·08d. per B.H.P. per hour, and that 20 B.H.P. can be secured for a little over 1½d.

TABLE V.

Cost of working three gas engines for one month, each driving 50 K.W. sets from one suction gas plant. Engines used for highly fluctuating load consisting of cranes, planing machines, foundry blower, and electric shunting locomotive at the works of Messrs. Werner & Pfleiderer, Peterborough.

Coke consumed, 22¼ tons at 12s. 6d. - - -	£13	18	2
Water consumed 88,000 gallons, 6d. per 1000 -	2	4	5
Wages - - - - - - - - - -	16	15	4
Oil - - - - - - - - - -	1	13	6
Sundries - - - - - - - - -	0	15	0
Scrubber and Purifier Renewals - - - -	0	5	6
Interest and Depreciation - - - - - -	22	10	0
Total	£58	1	11

Total output - - - - - - -	14,257 B.Th.U.
Cost per unit - - - - - - -	·97d.
Coke per H.P. per hour - - - - -	2·22 lbs.
Average load - - - - - - -	44·7 K.W.
Total running hours - - - - - -	319.
Cost of 20 B.H.P. - - - - - -	2·9d.

The figures given in Table V. are from the engineer in daily charge of the engines, Mr R. Weaving, Peterborough. See the *Electrical Review*, 28th September, 1906, page 491.

TABLE VI.

COMBE DOWN WATER-WORKS, BATH.

Consumption of fuel in a 60 B.H.P. Campbell suction gas engine and gas plant, driving a horizontal treble ram pump

delivering 16,250 gallons per hour against a pressure of 260 lbs. per square inch.

	January 24th.	January 26th.	January 26th.	January 27th.
Total hours worked, ...	14·25	9	13·75	12·75
Water consumed in gas plant per hour, ...	100 galls.	100 galls.	100 galls.	100 galls.
Total coal consumed, ...	770 lbs.	480 lbs.	780 lbs.	710 lbs.
Total water delivered,	231,562 galls.	146,250 galls.	223,437 galls.	207,187 galls.
Coal consumed per 1000 gallons of water delivered against 260 lbs. pressure, ...	3·33 lbs.	3·28 lbs.	3·46 lbs.	3·42 lbs.

TABLE VII.

Comparative cost of working a gas engine and electric motor driving a blower for a cupola furnace at the works of Messrs. Croft & Perkins, Bradford.

COST OF WORKING, 1901.

Town gas per thousand cubic feet - - 2s. 6d.
Cost of electricity - - - - - - 1d. per unit.
Consumption of town gas per ton of melted metal - 80 cubic feet.
Cost of town gas ,, ,, ,, 2·4d.
Consumption of units ,, ,, ,, 4·16.
Cost of electricity ,, ,, ,, 4·16d.

Since the year 1901 the Bradford Corporation have altered their charges for electricity, and put the same upon a sliding scale. At the same time the cost of gas was reduced, and it is interesting to show how these altered factors affect the cost of production as given below:—

COST OF WORKING, 1906.

Town gas per thousand cubic feet - - -	2s. 1d.
Cost of electricity - - - - - -	2d. per unit.
Consumption of town gas per ton of melted metal -	80 cubic feet.
Cost of town gas ,, ,, ,,	2d.
Consumption of units ,, ,, ,,	4·16.
Cost of electricity ,, ,, ,,	8·32d.

The gas and electricity were supplied by the Bradford Corporation.

The foregoing costs of working are the actual everyday working costs, as supplied by the users themselves. No attempt has in any way been made to give elaborate details of calculated or estimated costs, as these can evidently be framed by interested persons or by persons desiring to prove something more or less to please themselves.

However interesting estimated capital and working costs may be to some, the only real guide is that of actual working costs which have been obtained from experience. Those presented give an accurate account of the total costs incurred, but it might be interesting to detail some features connected with some of the items, so as to show more fully how these items are made up, and also to make a comparison in some instances with steam boilers.

Standby Losses.—When a suction gas plant is shut down after a day's work, the usual method is to open the waste pipe cock and ashpit door, and so allow a draught of air to pass through the generator to keep the fire alight. The standby loss is the amount of fuel consumed between shutting down at night and starting work next morning.

In Mr. Dowson's splendid book recently published on "Producer Gas," pages 164 to 171, will be found a fair and complete comparison of these standby losses between gas plants and steam boilers. I will only tabulate a few of the figures, but quite sufficient to show what the comparison is and how the gas plant withstands such comparison.

TABLE VIII.

CONSUMPTION OF FUEL IN STEAM BOILERS IN STANDBY HOURS.

Type of Boiler.	Max. H.P. of Boiler.	Coal consumed per standing hour.	Authority.
1. Various	100	14·0 lbs.	Mr Deely, Loco.-Supt., Midland Railway
2. Lancashire ...	450	*37·5 „	Mr Henry Lea.
3. Babcock & Wilcox	210	67·0 „	Col. R. E. B. Crompton
4. „ „	210	67·0 „	„ „ „
5. „ „	500	180·0 „	Mr H. Collins Bishop
6. „ „	500	112·0 „	„ „ „
7. Niclaussé ...	400	50·0 „	Messrs Willans & Robinson
8. Lancashire ...	400	44·7 „	Mr F. A. Wilkinson
		Average 71·5 lbs.	

* Exclusive of raising the steam pressure from 90 to 120 lbs.

The explanation of the enormous difference and saving in standby losses in the suction gas plant as compared with the steam boiler, will be more fully understood when it is pointed out that for a given horse power the gas producer is much smaller and has far less radiating surface than the boiler. It has no water to be heated, and it can be worked up to its maximum production in about fifteen minutes after standing almost any length of time. With a boiler there is usually a large amount of external brickwork to be heated, besides a considerable quantity of water. When the boiler is standing, the water and the brickwork lose heat, and not only more time, but more fuel is required to make up this loss, than in the case of the gas producer.

TABLE IX.

CONSUMPTION OF FUEL IN GAS PLANT IN STANDBY HOURS.

Locality.	Max. H.P. of Producer	Coal consumed per standing hour.	Authority.
1. Openshaw ...	250	5·1 lbs.	Messrs Crossley Bros., Ltd.
2. „ ...	250	3·9 „	„ „ „
3. Leicester ...	100	2·1 „	Mr Deeley (Midland Rail.)
4. Smallheath ...	250	4·5 „	Mr Henry Lea
5. Limerick ...	225	3·8 „	Mr J. Enright
6. Walthamstow ...	375	1·8 „	Mr F. A. Wilkinson
	Average,	3·5 lbs.	

The heat efficiency of a good boiler is no doubt high when it is working to nearly its full capacity, but the reverse is the case when it is standing; and in factories and electric lighting and power stations, where the plant is usually standing a long time, this question deserves closer attention.

Water Consumption.—Water consumption is an item of cost in a suction gas plant, and it is used for two purposes, viz., (1) For converting into steam for the production of gas; and, (2) for cleaning and cooling the gas after manufacture. From actual experience with various sizes of suction plants, I have found that, the total consumption for both these items is from 1½ to 2 gallons per B.H.P. per hour. If water be scarce or costly, special arrangements can be made for cleaning and cooling the gas, whereby the amount of water used might be reduced.

Repairs and Renewals.—With reference to this source of

expenditure, the suction plant requires little upkeep. In Table V. it will be seen that the actual cost of scrubber and purifier renewals, with a plant driving three 50 K.W. gas engines, amounted to 5s. 6d. for one month.

From a varied experience I should say that the cost of upkeep should not exceed, in a well-designed and constructed plant, the following amounts per annum:—

TABLE X.

50	Brake	horse	power	-	-	-	£3	0	0
75	,,	,,	,,	-	-	-	3	10	0
100	,,	,,	,,	-	-	-	4	0	0
150	,,	,,	,,	-	-	-	5	0	0
200	,,	,,	,,	-	-	-	6	10	0
250	,,	,,	,,	-	-	-	8	0	0
300	,,	,,	,,	-	-	-	10	0	0
400	,,	,,	,,	-	-	-	12	10	0
500	,,	,,	,,	-	-	-	15	0	0

The only items which can wear out are the bottom fire grate and the brick lining of the gas generator.

To conclude this section of the paper, it may be interesting to state approximately what saving in fuel is effected by the substitution of suction gas for town gas, and this is shown in Table XI.

TABLE XI.

Gas at	1/4	per thousand	cubic	feet,	saving 50%
,,	1/9	,,	,,	,,	60%
,,	2/-	,,	,,	,,	66%
,,	2/6	,,	,,	,,	70%
,,	3/-	,,	,,	,,	75%

These figures give the saving in fuel alone, and while only approximate, yet the percentage of saving has been borne out by actual experience of many plants.

From the figures herein set forth I am quite content that the suction plant shall be judged. Theoretical figures have been avoided in what has preceded, and the more frequently that actual results are put before the public, the clearer will be the views entertained on this matter.

Coming now to the design and construction of the suction gas plant, Fig. 1 illustrates a standard plant of 100 B.H.P., consisting of three main pieces—the gas generator and two coke scrubbers.

The gas generator is made of steel plates so as to provide for the expansion and contraction of the shell. It is lined in a very substantial manner with fireclay or silica bricks, the latter being the more durable. The base of the generator is formed to make the ashpit and firegrate, and is of cast iron. This material is preferred to steel plates, as it resists any internal and external corrosion which is likely to take place much better than a thin plate would do.

The vaporiser, for raising the necessary steam for gas making, is mounted on the top of the generator, and it also is made of cast iron. It is, as will be seen, corrugated in cross-sectional form, it being made in this manner, not only to provide for expansion and contraction, but also to secure a larger heating surface than would be otherwise obtainable.

The gas passing from the generator is taken down through a double-crossed ribbed pipe, termed the superheater, which serves a two-fold purpose, viz., that of cooling the newly made gas, and heating the in-going charge of air and steam. This is accomplished by passing the air and steam down the internal portion of the pipe, while the newly-made and hot gases pass down one side and up the other side of the outer pipe.

The gas passes from the superheater to the two coke scrubbers, where it is both cleaned and cooled. It is first caused to pass through a water seal at the bottom of No. 1 scrubber, and in doing so the heavier particles of dust and tarry matter are thrown down. The gas rises up through the coke,

and at the same time cold water from the sprayer, at the top of the scrubber, passes downwards through the coke, and so the gas is cleaned and cooled.

From No. 1 scrubber it is passed to No. 2 scrubber, where a similar action takes place; it finally leaves No. 2 scrubber, and is passed from thence to the gas box, which is usually placed as near to the engine as possible, and from which the engine draws its supply of gas.

The essential points to be noticed about a suction plant may be summed up as follows:—

1. The gas generator body should not be made of cast iron, but of steel plate; for if made of the former metal it would sooner or later crack, owing to the expansion and contraction that goes on, and when once an air leak takes place, either in the generator body or firebrick lining, no gas can be satisfactorily manufactured, as it is essential that atmospheric air should be totally excluded from the generator, except that passing through the proper channel.

2. The base of the generator should be of cast iron, to resist corrosion.

3. The lining of the generator should be of a very substantial character. The bricks, whether of fireclay or silica, in a 100 B.H.P. plant should not be less than 8 inches thick, and a sand packing should be allowed for between the bricks and the outer shell of steel plate.

4. The bases of the coke scrubbers should be made of cast iron, and not of steel plate, as internal corrosion may, in the course of three or four years, destroy the $\frac{1}{4}$-inch or $\frac{5}{16}$-inch plate of which these are usually made, but with a cast iron base the scrubbers will withstand any corrosion which is likely to occur for an indefinite period.

5. The capacity of the generator should be large enough to allow a wide margin in the quality of the fuel consumed, and to reduce the amount of attendance required for feeding and clinkering the generator. Several makers are foolishly

cutting down the dimensions of their generators for the purpose of economy in manufacture, and in doing so they are limiting themselves and their users to only the best quality of fuel, and rendering it extremely difficult for the maximum power to be obtained for any lengthened period, without experiencing trouble caused by clinkering or choking up of the plant by clinker or ash.

6. The capacity of the coke scrubbers for any size of plant should be such that it can be run six days per week for twelve months without the coke requiring renewal. I have known plants where the coke had to be renewed once a month, otherwise the scrubber became choked up, and the gas could not be passed through it.

Several objections have been raised to the use of suction gas plants, and the following are mentioned so that they may be discussed. It is alleged that—

1. Owing to the impurity of the gas the wear and tear on the engines are heavy, and that the cost of cleaning the engine is great.

2. The amount of lubricating oil used in a suction gas engine is excessive.

3. The gas generated is poisonous, and as it does not possess a pungent smell, such as lighting gas, an escape is not noticed until harm is done.

4. That the effluent from the coke scrubber is noxious and causes a nuisance.

But these objections might be replied to as follows:—

1. The impurity of suction gas is no greater than any other form of producer gas used as motive power, and my experience of it for several years proves that there are no additional wear and tear in the engine through its use. The amount of cleaning required with suction gas depends entirely upon the capacity and efficiency of the arrangements used for cleaning the gas before it is admitted to the engine. If these are ample and well designed, the engine valves should not require clean-

ing oftener than once a month, and the piston and cylinder once in six months.

2. The amount of lubricating oil used is no greater than if the engine worked with lighting gas. Considerable improvements have been effected recently in the lubrication of gas engines whereby the quantity is considerably reduced. The adoption of ring lubrication to the crank-shaft, cam-shaft, and other bearings, and the adoption of forced lubrication to the piston and cylinder has minimised the consumption very greatly.

3. Like all producer gases, whether used for furnace, boiler, or motive power purposes, suction gas is poisonous and non-odorous, but as the whole plant is working slightly below atmospheric pressure, there is no possibility of escape of gas. The only time that gas escapes from any part of the plant is when it is being started to work, and then the gas is blown to waste through a properly-arranged chimney or waste pipe.

Under certain rare circumstances there is also a possibility of leakage of gas when clinkering the generator; for instance, when the fire has burnt hollow, and there remians in the hollow part a quantity of gas which escapes to the atmosphere when the attendant breaks through the clinker. I only know of one case of "poisoning" and one case of "gassing," and in both cases carelessness in observing the necessary precautions was the cause.

One of course has to recognise that a certain amount of risk is attachable to a great many industrial operations. Persons may get killed by electric shock, or by being entangled in machine tools, and so forth; but want of precaution or carefulness not being observed and damage occurring, is no argument for dispensing with either electricity or the use of machine tools.

4. With regard to the question of the quality of the effluent water from the coke scrubber, this point was once raised in connection with the possibility of polluting a stream, into

which it was intended to turn the effluent. To decide the matter, the effluent water was analysed by a chemist who had had considerable experience with effluents of various kinds which were turned into public sewers, and the part of his report dealing with this point stated that—"Authorities are always suspicious of gas works' spent liquors, as such often contain tarry matter, which makes their treatment at the sewage works difficult. This effluent which I have analysed does not contain any tarry matter, and I do not consider that it should be objected to in a sewer. For my part, so long as tarry matter is kept out, I should have no hesitation in turning such into a sewer."

Further experience has shown since this report was made that no detrimental effect has been caused by the effluent water in either sewers or streams.

Great developments have been made during the last five or six years in the design and construction of gas engines, particularly in the larger sizes. Some old types have been resuscitated in an improved form; while the old Otto cycle engine has been developed and brought to perfection in, what can only be called, an amazing fashion. British gas engine makers in the early stages of this development did not play an important part, not altogether through their own fault, but mainly through the want of enterprise on the part of those who might easily have supported them, by giving similar opportunities to those which the German makers had when they were developing the blast furnace gas engine. It must not be forgotten, however, that the problem of the use of blast furnace gas as motive power was first tried at Wishaw by Mr B. H. Thwaite.

However, the slow and cautious British buyer is now more confident, and is giving the large gas engine makers that support which he ought to have given them some years ago.

In connection with these large engines, I wish only to mention some of the cycles employed, and how they compare

with the older forms from which they have been developed. There are two cycles of engines principally made, these being—

1. The two-cycle, or what is known as the "Clerk" cycle.
2. The four-cycle, or better known as the "Otto" cycle.

The two-cycle engine would be better named a two-stroke engine—that is, for every two strokes of the engine an ignition takes place. The well-known engines of the Köerting Co. and Oechelhäuser are constructed on this principle.

To arrive at a better understanding of how these engines correspond in principle to the engines of the Clerk type, Fig. 3 is given to show a sectional illustration of one of my early engines.

This engine consists of two cylinders, one acting as a pump to feed the other or motor cylinder with an explosive mixture of gas and air. The pump cylinder was sometimes made larger in capacity, and at other times smaller in capacity, than the motor cylinder. When the pump was made larger in capacity, it was arranged that the mixture of gas and air was drawn into the pump during the first three-fourths of the outstroke, and for the remaining one-fourth of the stroke only air was drawn in; the idea being that pure air would be pushed into the motor cylinder first and it would sweep out the burnt gases of the previous ignition, cool the cylinder, and prevent the fresh charge of gas and air being lost through the exhaust ports. It was found then, as it is found to-day, that it is impossible to prevent the pure air, and the mixture of gas and air, from combining in the pump cylinder, and in the connecting pipe and passages between the motor cylinder, consequently, instead of pure air being driven out through the exhaust ports of the motor cylinder a portion of the fresh charge of gas and air was lost through these passages. This has always been the problem of the two-cycle engine; it was not solved twenty years ago, and it has not been solved to-day. Many expedients have been tried, but all have more or less failed to

obtain the object of preventing a portion of the new charge being lost through open exhaust ports. One of the expedients which I experimented with for a long time was to vary the capacity of the pump cylinder. As already indicated, it was made in some cases with a smaller capacity than the motor cylinder, and no attempt was made to have a stratified charge of gas and air, but to fill the pump entirely with a mixture of gas and air, the idea being that as it was impossible to prevent a portion of the charge being lost, as in the previous case, it was thought that a lesser pump capacity would remove the difficulty. This, however, was not successful, as it was impossible to make the in-coming charge move forward into the motor cylinder in a solid mass as it entered, because owing to its velocity it moved in the form of streams and caused eddies, the result being that a portion of the fresh charge of gas and air mixed with a portion of the burnt gases in the cylinder, and so deteriorated the value of the charge, and also a further portion of the fresh charge was lost through the open exhaust ports. Hence it is, that all the two-cycle engines of to-day, as they were twenty years ago, are less economical than those constructed on the four-cycle principle.

There were other serious objections and disadvantages in this engine besides the want of economy, viz., the increased number of ignitions per minute had a detrimental effect on the life of the cylinder and piston of the motor cylinder. These ignitions, occurring at every revolution instead of every second revolution, prevented that cooling down of the cylinder which is such a prominent feature in the Otto cycle. The consequence was that, even in a period of six months, the cylinder required reboring and a new piston and rings fitted to it, otherwise a great leakage of power took place, and the gas consumption was larger than ever.

This difficulty of enormous wear and tear in the pistons and cylinders of the two-cycle engine was a very real one, and that combined with the heavy consumption of gas were the reasons

why in those days the two-cycle engine was dropped by every gas engine maker. It might be mentioned here that great difficulty was always experienced in preventing the fresh mixture of gas and air when entering the motor cylinder from being prematurely ignited by the flame from the previous ignition existing in it; such premature ignitions were frequent and difficult to control. The adoption of a better system of ignition and admission of the charge in the later forms of this type of engine has, however, considerably modified this difficulty; but it must always be a difficulty, especially when dealing with gases of low calorific power, and with small volumes in large cylinders, such as takes place when large engines are run with light loads.

It was considered very good practice twenty years ago to be able to secure a consumption of from 36 to 40 cubic feet of town gas per B.H.P. per hour. Better figures than these can of course be obtained to-day with the later forms of two-cycle engines, but they are now, and must always be, more extravagant with fuel or gas than the Otto cycle type; but when working with blast furnace gas this question of consumption is not an important one.

Fig. 4 illustrates a sectional plan of the Köerting engine made on the two-cycle principle. It is double acting, whereas the older forms of this type were made only single acting, *i.e.*, the ignition took place on one side of the piston while the double-acting engine has ignition on both sides. In consequence of the engine being double acting the pumps for feeding the motor cylinder with the charges of gas and air must also be double acting.

In the Köerting engine, as in the older type, the charge is admitted at one end of the cylinder at the moment that the exhaust ports are uncovered by the piston, and the whole of the charge must be inside the motor cylinder before the exhaust ports are closed. In this way there is the same danger of losing a portion of the charge in the Köerting engine as existed with the old types.

To prevent as much as possible that premature ignition and loss of charge already mentioned taking place, the gas and air are delivered separately to the inlet valve where they are mixed together on admission to the motor cylinder.

Fig. 5 shows one of the newer forms of two-cycle engine, namely, that made by the Oechelhäuser Company. Here is a long motor cylinder in which two pistons work in opposite directions, and in one part of the cylinder close to the out-stroke of one of the pistons are formed the exhaust ports.

On leaving Glasgow some twenty-five years ago to seek my fortune, I carried with me, as I then thought, a great treasure, namely, a drawing of an engine designed on the same lines as the Oechelhäuser, with two pistons in one cylinder moving in opposite directions, the cylinder being fed by a pump. Others also have worked on the same lines with engines of this principle, and some were made by Messrs. Scott Bros., of Halifax, but on the Otto cycle.

The Oechelhäuser has a three-throw crankshaft, the back piston being connected to the two outside crank pins by cross-heads and connecting rods. The motor cylinder is fed by a pump acting in the same manner as the Köerting and the older forms of engine. An examination of the illustrations of the Köerting and Oechelhäuser types shows that the essential features of both are the same as with the older forms of engine.

Fig. 6 is an illustration of what might be considered one of the best types of modern gas engines, that constructed by the Nurnberg Company on the four-stroke or Otto cycle principle. The Nurnberg Company were among the first of the German firms to take up the manufacture of large gas engines for use with blast furnace gas, but they have since extended their operations in other directions.

In the illustration shown the engine is of 350 B.H.P., and is double acting. The cylinder jacket, cylinder liner, as well as both combustion chambers, are cast all in one piece. While

this form of construction obviates many difficulties in abolishing troublesome joints, yet it introduces others, the principal one being, that if any part of this large piece becomes damaged, or requires repair or renewal, the whole portion has to be dealt with. The piston, piston rod, and exhaust valves are all thoroughly water cooled, this point being one which seems to have been very carefully thought out, as it certainly should be with gas engines of even moderate powers. The ease with which the internal working parts of the engine can be attended to is a point which some British makers might well take a hint from. The method of governing this engine is that known as quality governing, *i.e.*, the quality of the mixture is only effected by the governor and not the quantity or the number of ignitions. The question of governing will be referred to a little later on.

A horizontal single-acting engine of 110 B.H.P., designed by myself on the Otto cycle, is shown in Fig. 7. Its principal features are the massive bedplate, the method of supporting the cylinder—the outer jacket of which is, in fact, cast with the bedplate—and the water cooling of the piston and exhaust valve. Self-oiling ring lubrication has been adopted throughout for the crankshaft and cam shaft bearings, and the outer bearing supporting the fly-wheel. Forced lubrication is provided for the cylinder and piston, and automatic lubrication for the crank pin.

One practical point worthy of notice is the heavy character of the crankshaft fitted to this engine, and the very large size of the bearings; a separate and detailed illustration of it being given in Fig. 8. Gas engine makers have found from actual experience that there is no use attempting to make the crankshaft by calculation, as stresses come upon it from time to time which are not calculable, and slowly but surely they have gained sufficient experience to show them that previous ideas as to the sizes of crankshafts were quite wrong, and that very much larger ones are necessary to meet these incalculable

strains and stresses, as well as to give larger bearing surfaces. Consequently the engines which are being made to-day, are, and should be, much heavier than what were made some time ago. Again, it has been the favourite practice of some to use white metal for the main bearings because, with the heavy stresses and smaller wearing surfaces, it was found that gun metal and phosphor bronze would not work satisfactorily. Experience has also shown that white metal in gas engine bearings is not satisfactory owing to the spreading and cracking of the metal, and the true remedy is larger crankshafts providing adequate surfaces so that harder alloys can be used for bearings.

The exhaust valve on the engine shown is not only water cooled, but it is balanced. A piston is fitted underneath the valve and is attached to the valve spindle, a connecting pipe is led from there to the engine cylinder, and when the engine piston uncovers the pipe the pressure is transmitted to the balancing piston, so that, when the time for opening the valve arrives, the stress on the lever, cam, and cam roller is relieved. In the engine in question, were the exhaust valve unbalanced, it would mean that the valve lever would have to raise a weight equal to two tons each time the valve is opened. As it is now arranged with the balancing piston, it has to raise 500 lbs. only.

This engine is governed on the hit and miss system, *i.e.*, the governor cuts out a certain number of explosions, the number being determined according to the load.

There are three systems of governing in use in gas engines, and as the methods of governing considerably affect, not only the speed regulation, but also the economy of working, they desire more than a passing comment.

The three systems in use are what is known as—

1. Quality governing of the mixture.
2. Quantity governing of the mixture.
3. Hit and miss system.

1. Quality governing means that the total quantity of the charge taken into the cylinder remains practically the same; but the proportions of gas to air are varied to suit the load, an ignition taking place at each cycle of the engine. The difficulty of this method is that the proportion of gas to air cannot be reduced beyond a certain ratio, because the mixture becomes too weak to ignite, and this is more pronounced when using a gas of low heat value. Hence it is that, some makers who adopt this system of governing arrange that when the engine works below half load, the valve gearing is designed so that at all loads from half load to full load the engine is governed on the quality method; but on powers from half load to light load the engine is governed on the hit and miss system, the arrangement being a sort of double barrelled gear, consisting of both quality and hit and miss governing.

The difficulty of the quality method is one of igniting the weak mixture at light loads, and, if capable of ignition, there is incomplete combustion. Of course it might be said that engines are not built to run on light loads; but, frequently in practice, even very large engines have to run both at light and highly fluctuating loads, so that it is necessary in any governing system to provide for such.

The quality system of governing has at least one good point in its favour, and that is, the compression in the cylinder remains practically constant at all loads, so that, theoretically, the engine is working under the best conditions.

2. Quantity System.—This method of governing means that the quantity or volume of gas and air taken into the cylinder is varied to suit the load, the proportions of the mixture remaining constant at all loads, an ignition taking place at each cycle. In consequence of this, the compression in the cylinder varies with the load, and though that is not theoretically good, yet complete combustion, and perfect ignition, can be obtained by it at all loads. These two points have been found in actual practice to be of great importance.

Fig. 9 illustrates a set of indicator diagrams of both methods of governing, the quality method diagrams being taken from a Nurnberg engine, and the quantity method from one of my own engines.

3. Hit and Miss System.—This system is the oldest arrangement of governing, and while all gas engine designers admit that it is the simplest and most economical method, yet, while admitting this, many describe it as being crude and insufficient in its capability of regulating speeds so nicely as the other methods. To a certain extent this is true, and as the demand for close regulation becomes greater each year, especially from electrical engineers, it has caused many to abandon the hit and miss system, and adopt one or other of the previous methods described.

My experience of all three types of governing proves to me that, with the quality or quantity system less cyclical variation in speed is obtained owing to the ignition at each cycle; but there is with these systems a greater variation in speed between no load and full load than with the hit and miss system. A low cyclical variation is what is required by most electrical engineers, the variation between full and no load being to them of little importance, hence the favour with which both consulting and electrical engineers look upon one or other of these methods of governing; but it is sometimes questionable whether this low cyclical variation is not purchased at too dear a cost.

As previously asserted, the question of economy is affected by the system of governing, and there is no doubt whatever that the hit and miss system stands pre-eminently as the most economical system, though, of course, it has to be remembered that at full load all systems are equal in economy; but few engines are worked at full load for any period, hence the hit and miss system, for economical reasons, is easily first. That the low cyclical variation is often purchased at too dear a cost may be understood, when it is

mentioned that in an engine of 100 B.H.P., when working at half load, the quality system will be 20 per cent. and the quantity system 25 per cent. less economical than the hit and miss system, and with lighter loads than half power the difference becomes greater. Taking the same size of engine running at light load the difference in economy will be 40 per cent. This is the price which one has to pay for low cyclical variation at light loads.

The reason for the better regulation of the hit and miss system between no load and full load is due solely to the fact that the governor moves only a comparatively small distance, whereas the governor required for the other systems must of necessity have a comparatively large movement.

The hit and miss system can be adapted for most purposes, but where there is extreme regularity of cyclical variation, such as is required for driving alternators in parallel and similar cases, one of the other systems is absolutely essential. In addition to this, the hit and miss system is not suitable for multi-cylinder engines. Personally, I prefer the quality system of governing for engines of this type.

The quality-governing arrangement of the Nurnberg Company is shown in Fig. 10. It consists of a double-beat valve, controlling the gas supply only, and is lifted to various heights by a cammed lever under the control of the governor. The system of levers adopted to vary the height of the lift is that of having a moveable fulcrum, and in consequence of the ratios of the levers varying according to the position of the fulcrum, the lift of the valve is varied. The double-beat valve is objectionable, as it is difficult to keep both faces tight, and when used in connection with producer gas it has been found that the less the valve surface, the better it is.

An illustration of the quantity-governing system, as used by myself in a four-cylinder engine, and also in a large horizontal engine is shown in Fig. 11. It consists of a flat-faced, double-beat valve, controlling both the air and the gas sup-

plies. This valve never closes; it is always held open more or less by the governor, according to the load on the engine at any moment. The arrangement of the governor, lever, and valves is of a very simple character, and it has been found to work very well.

The construction of the hit and miss arrangement is illustrated in Fig. 12. The gas valve is opened by a cam and lever, but interposed between the lever and the gas valve spindle is a steel drop piece, which, when the engine works at normal speed, engages with a steel piece on the end of the lever, and so the valve is opened; but if the speed rises above the normal the governor withdraws the drop piece, and the lever on its next movement misses the valve, and so no gas is drawn into the cylinder. When the speed returns to the normal, the steel pieces engage again, and the operation described is again repeated.

Fig. 13 illustrates a vertical four-cylinder gas engine, constructed mainly for electric lighting and power stations. Each of the cylinders work on the Otto cycle, and has its own independent set of inlet and exhaust valves and ignition gear. The ignition in all cases is effected by a magneto electric machine, and it is arranged that the point of ignition can be varied always when the engine is at work.

When the first of this type of engine was constructed, the internal working parts were fitted with splash lubrication, but a couple of years' experience of that method showed how unreliable and how expensive in oil such a system was, and now this type of engine is fitted with forced lubrication throughout, arranged in a similar manner to that adopted in steam engines of the enclosed type.

The vertical four-cylinder engine is practically balanced so far as its working parts are concerned, and the turning moment is very even and regular. The governing is arranged on the quantity system. One advantage obtained by the use of four cylinders, is that momentary overloads can be taken

Fig. 14.

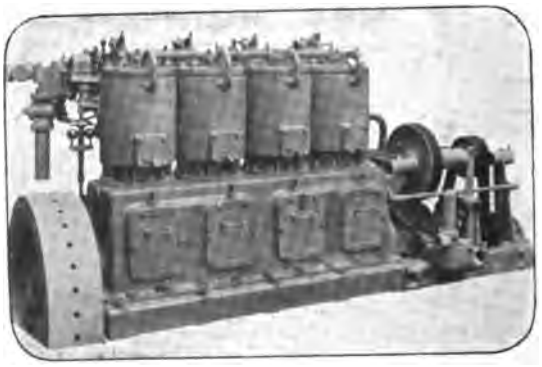

Fig. 15.

Fig. 16.

with comparative ease, whereas a single cylinder engine would be immediately pulled up. This advantage in the four-cylinder engine is obtained by the frequency with which the ignitions take place, these being four against one in the single cylinder engine.

The low cyclical variation in this type of engine renders it very suitable for alternator driving with only a moderate weight of fly-wheel. Engines of this class have been made up to 400 B.H.P.

An arrangement of a vertical two-cylinder engine and suction gas plant of 125 B.H.P. capacity is shown in Fig. 14. It is adapted for continuous night and day working for the manufacture of ice, or other purposes where continuous work is necessary. Two such plants have been at work in Scotland for some months, and in both cases runs of over a month at a time, without a stop, have taken place.

For continuous working with a suction plant it is always necessary that the gas generator should be in duplicate—*i.e.*, two gas generators with one set of coke scrubbers. This plant is worked with one generator at a time, and for so long as it can be run without requiring to be clinkered. Before it is shut down for clinkering the duplicate generator is set going, and for a few minutes both generators are opened to the engine; after that the used generator is closed down for clinkering, and it in its turn is got ready for the next run.

The application of the gas engine and suction gas plant to marine work has attracted the attention of many minds, both in this country and abroad. The illustration, Fig. 15, shows a vertical four-cylinder suction gas engine of 100 B.H.P. as made by my firm for a tug, Fig. 16, plying between Rotterdam and the Rhine.

No difficulty has been found with either the engine or gas plant; the troubles experienced have been outside of these, viz.—the reversing gear and the propeller. Two kinds of reversing gear have been tried, and the one now in use has

proved a great improvement on the first one fitted, but reversing gears at the best are complicated, heavy, and, more or less, noisy things, and so it has been decided to abolish it altogether, and to introduce a reversible propeller. There is no doubt a large field open to the successful marine gas engine for small craft requiring engines under 300 B.H.P., but beyond this power at the present time the matter is a question of prophecy.

Discussion.

Mr F. J. ROWAN (Member of Council) said that there were very few engineering subjects of greater general interest at the present time than that which Mr Campbell had chosen, or that had had a larger amount of attention devoted to them. When it was remembered that there were between 20 and 30 firms in Britain making large gas engines, besides a large number of makers of small gas engines, 29 firms in Germany making large gas engines, some 6 or 8 in America, 2 in Belgium, and others in France and Switzerland; and that there were about 50 different designs of suction gas producers already on the market, they had an idea of the magnitude of the field which that subject covered. On this account it might be regretted that Mr Campbell had not given them the benefit of a wider survey of the subject, but had limited his view to a very few types of engine and practically to one suction producer design. There was, however, no lack of published material and he had come in contact with over 30 papers and books on various branches of the subject which had been published practically within the last two or three years, bearing witness to the enormous amount of investigation and research which was going on. A list of these he would add as a contribution to the bibliography of the subject. Mr Campbell was nevertheless to be congratulated upon having given them a useful and practical paper, the first portion

especially containing data of costs and consumption which were of very great interest. It was when Mr Campbell came to the question of design that he made them wish that he had taken a wider view, one in fact in accordance with the title of his paper. The essential features of suction producer design had been excellently described by Professor Dalby, in his paper read before the British Association at York during this year, and he (Mr Rowan) had reproduced some of his diagrams, feeling sure that they would be of interest in this discussion. Fig. 17 gave a representation in straight line

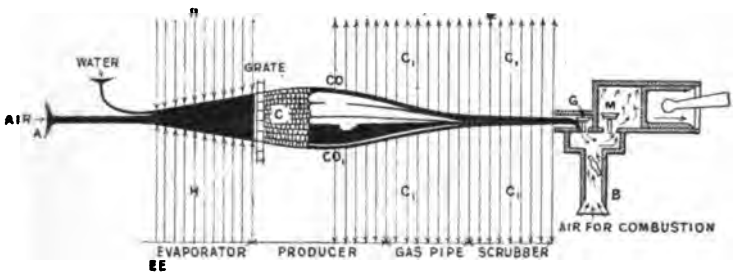

Fig. 17.

form of the actions which took place. The air for combustion entered at A, being joined by the water vapour before passing into the combustion zone. Both air and water should receive heat in the preliminary stage to fit them for their work in the producer, *i.e.*, the air should be heated and the water must be vaporised. That was represented by the arrows marked H, which pointed inwards. In the producer the fuel, air, and steam reacted on one another and produced a gaseous mixture which was represented by the black horizontal lines of various thicknesses and which passed from the producer by means of the gas pipe to the scrubber, and thence to the engine cylinder through valves shown at G. The density of the gas in the hot state being small and, therefore, unsuited for economically producing power, the gases must be cooled

down to nearly atmospheric temperature before they entered the engine cylinder or mixing chamber. Consequently, heat must be abstracted from the gas in the outgoing portion of the plant, as was represented by the arrows at C_1 pointing outwards. The engine, of course, drew the air into the producer and the gases out of it and through the plant. The further supply of air needed for combustion of the charges of gas in the cylinder were drawn in at B through valves at M. It followed easily from this representation that the heat which was rejected at C should be transferred as fully as possible to the region at H where it was wanted, and it was on that point that the excellence of different designs depended to a great extent. Fig. 18 showed one way in which this

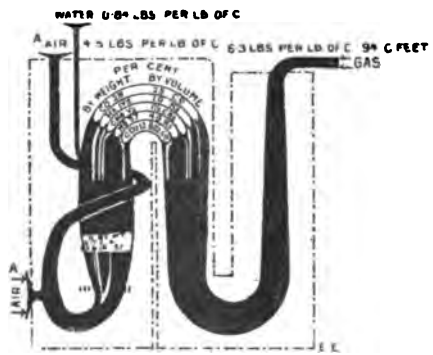

Fig. 18.

result was aimed at, the air and water streams being made to take up the heat given out from the producer body by radiation from the hot fuel or gases there. In designs of that class the other parts of the plant were not thus utilised for recuperation of heat. In Fig. 19, however, there was a more complete design represented, as all the portions of plant up to the scrubber were drawn upon as a source of heat to the incoming air and water. Several of the examples of suction plant introduced in Britain and other countries conformed to

these features more completely than the single design shown by Mr Campbell, and it would have been interesting and instructive if they had had an opportunity of comparing a few of the different designs. Professor Dalby had also given some particulars of the areas and capacities of producers, on which point very little information was as yet available. Soon after the introduction of the suction producer, it became apparent that its weak point was found when it had to be worked for any length of time at low load. The quantity of air drawn in by the engine under these circumstances was

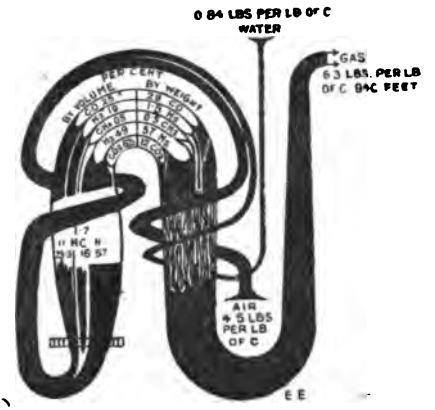

Fig. 19.

too small to maintain a sufficiently high temperature in the producer, to provide for efficient gasification of the fuel along with decomposition of the steam. Consequently, efforts had been made and were being made to overcome that defect, as it was generally impossible to reckon upon a continuous full load being required in any plant. A promising direction in which ingenuity had been directed was in varying the supply of steam admitted to the producer according to the load, and in that way, as the load diminished less heat was abstracted from the glowing fuel by the dissociation of the steam, *i.e.*, a larger proportion of air was admitted, and combustion was

Mr F. J. Rowan.
carried on at a higher temperature to balance the slower rate, and thus preserve the quality of the gas produced. Automatic devices for cutting out the evaporator partially or wholly from the circuit under these circumstances had been introduced and were said to answer well. Another direction in which ingenuity had been exercised in order to overcome the defect mentioned, was that of using a portion of the exhaust gases from the engine mixed with the air entering the producer instead of using water vapour. This substitute for the steam was proposed also with a view to diminishing the amount of hydrogen in the producer gases from pressure producers in order to keep down the ignition temperature in gas engine cylinders, but in a series of trials in America with suction gas plant, reported upon by Mr G. H. Barrus, it had given results showing a fuel economy of 38 per cent. and an increase in the relative capacity of engine of about 25 per cent. as compared with the ordinary system. Regarding the design of gas engines, the recent papers read before the Iron and Steel Institute contained the fullest information about the large engines built in Britain and on the Continent of Europe, whilst the paper read by Mr. Sargent to the Western Society of Engineers supplied like information about American practice. In mentioning the commencement of the utilisation of blast furnace gases, Mr. Campbell had omitted the names of Mr Riley and Mr Burt, to both of whom some of the credit which he gave to Mr Thwaite was due. On the point of the governing of gas engines the interest of Mr Campbell's paper would have been increased if he had added to his excellent illustrations some notice of the ingenious method of Herr August Mees of Dusseldorf, by which a combination of both quality and quantity governing was effected. The valve of Herr Mees somewhat resembled the central governing valve of the Willans' steam engine. Mr Campbell had also omitted the "super-compression" method carried out by the National Gas Engine Company with Mr

Clerk, and by the Nurnberg Company, both apparently following M. Letombe, some account of which would have been interesting, although that method did not seem to be destined to become generally adopted. It was to be regretted too, that Mr Campbell had not more fully described some of the actual examples of the marine gas engine and plant. No doubt the papers by Herr Capitaine, Mr Thornycroft and Mr May, already published, gave that information which might, however, have been brought before them in a condensed form; and Mr J. T. Milton, of Lloyd's Registry, had written a paper for the Institution of Civil Engineers in London on that subject, in which he dealt pretty fully with the special conditions which must be satisfied by a successful marine gas engine, and discussed in a practical way the real difficulties of the problem. It had always appeared to him (Mr Rowan) strange that in dealing with gases having small differences in specific gravity, and being, moreover, in rapid motion, reasoning should be founded upon the idea of anything like stratification existing in the charge in a gas engine cylinder. The laws of the diffusion of gases were against such a result being realised, and the words used by Mr Campbell at pp. 99 and 100, to his mind, more accurately described what must take place, although he could not be certain from these paragraphs whether Mr Campbell believed in the stratified charge theory or not. There was one point on which it was surprising that a great deal more was not said, and that was regarding the introduction of means for utilising the waste heat from gas engines. A very large proportion of the heat generated by the combustion of the charges of gas and air escaped in the jacket water and the exhaust gases, and yet very little had been done to recover that heat. Proposals had been made to use the heat of the exhaust gases for evaporating water in a small boiler, and others to employ them as a heating medium in a binary vapour system, but there was a dearth of practical experiment or information about trials

Mr F. J. Rowan.

of these or other devices. Recently a very interesting system had been proposed by Professor Sydney A. Reeve in America, in which the explosion of the gas mixture took place in a separate chamber in presence of water through which the hot products of combustion passed, turning it into steam at the pressure resulting from the explosion (minus, of course, the heat absorbed), the mixture of steam and gas being then used in the cylinders of a compound steam engine. That was a somewhat novel method of working, and it was maintained that the heat losses were greatly reduced by it; the high initial temperature of the working fluid in the cylinder was obviated and less heat had to be rejected uselessly. He thought there was still another way in which the waste heat from the ordinary gas engine could be utilised, but he would not say any more about it until it was tried.

List of Papers, etc., referred to in Mr Rowan's Remarks.

Suction Gas Producers. Journal Junior Inst. Engineers. Vol. XIV. 1903-4. W. A. Tookey. Journal Junior Inst. Engineers. Vol. XVI. 1905-06.

Producer Gas. J. Emerson Dowson and T. Larter. Longmans, Green & Co. London. 1906.

Producer Gas Tests of the U.S. Geological Survey Coal Testing Plant. Prof. Fernald. Trans. Amer. Soc. Mech. Eng. Vol. XXVII. 1906. And Official Bulletins.

Gas Engines and Producer Gas Plants. By R. E. Mathot. London. 1905.

Producer Gas Plant. F. J. Rowan. Glasgow Tech. Coll. Scientific Society. 1906.

Gas Engines for Ship Propulsion. J. G. Thornycroft. Trans. Inst. N.A. 1904. Vol. XLVI., pp. 145-167. 1906. Vol. XLVIII., pp. 105-122.

Internal Combustion Engines for Marine Purposes. J. T. Milton. Min. Proc. Inst. C.E. 1906-1907.

"On the Specific Heat of, Heat Flow from, and other Phenomena of, the Working Fluid in the Cylinder of the Internal Combustion Engine." D. Clerk. Proc. Royal Socy. June, 1906.

"Method of Determining the Temperature and the Rate of Heat Production in the Cylinder of a Gas Engine." Captain H. R. Sankey. Proc. Inst. Mech. Eng. May. 1906. (Mem. for the Gas Engine Research Committee).

First and Second Report of the Gas Engine Research Committee. Proc. Inst. Mech. Eng. 1898 and 1901.

Report on Trials of Suction Producer Plants at Glasgow. July, 1905. By Prof. Stanfield and J. Middleton. Trans. Highland and Agricultural Socy. of Scotland.

Suction Gas Plants. Trials at the R.A.S.E. Show, Derby. June, 1906. "Engineering." June, 1906.

"Tests of a Gas Engine with Suction Plant." G. H. Barras. "Cassier's Mag." Sept., 1906.

"Measurement of Friction in Gas Engines." A. H. Burnand. "Engineering." July 15, 1906.

"Calorimetry of Gaseous Fuels. W. G. Wernham. (The Mech. Engineer. Sept. 1904). Inst. Junior Engineers.

"Flame Temperatures in Internal Combustion Engines." D. Clerk. Proc. Inst. Junior Engineers. (Mech. Eng. Sept., 1904).

"Suction Gas Producers." By Prof. Dalby. Paper before Brit. Assoc. at York Meeting, 1906.

Papers by Lurmann, Meyer, Witz, Kutzbach.

Humphry. "Gas Power and Large Gas Engines. Proc. Inst. Mech. Eng. 1900.

"Design, Construction, and Application of Large Gas Engines in Europe." F. E. Junge. "Power." Nov., 1905.

"Notes on Power Production." W. McClellan, Ph.D. "Engineering News," 29th December, 1904.

"The Junge Heat Engine System." H. Diederichs. "Power." May, 1905.

Cantor Lectures on "Internal Combustion Engines." D. Clerk. Jour. Soc. Arts. July, 1905.

"Growth of Large Gas Engines on the Continent." R. Mathot. Inst. Mech. Eng. June, 1905.

"Various Methods of Governing Four-Cycle Gas Engines." R. Mathot. "Engineering Mag." Dec., 1905.

The "Mees" Gas Engine. Dr. A. Gradenwitz. "Engineering Review." March, 1906.

"The Prime Mover of the Future." C. E. Sargent. Jour. Western Socy. of Engineers. Feby., 1906.

"Application of Large Gas Engines in the German Iron and Steel Industries." K. Reinhardt. Jour. Iron and Steel Inst. 1906.

"Design of Blast Furnace for Gas Engines in Belgium." Prof. H. Hubert. Jour. Iron and Steel Inst. 1906.

"Some Future Developments of Heat Engines." Prof. F. W. Burstall. Jour. W. of Scot. Iron and Steel Inst. 1905-6.

"Notes on Large Gas Engines built in Britain and upon Gas Cleaning," by Tom Westgarth. Jour. Iron and Steel Inst.

Mr ALEXANDER WILSON (Member of Council) remarked that as one who supplied town gas, he had been very much interested in such a strong competitor as the suction producer. The costs put forward in connection with the suction producer

Mr Alexander Wilson.
appeared to put town gas into the background for motive power in the meantime, but he was looking forward to the time when its price would be very materially reduced for power purposes. Mr Rowan had spoken that evening about the recovering of the waste heat from producers. That, in connection with the suction producer, was a source of gain, because the cool gases could be used to get the full benefit in the gas engine cylinder, but in other cases it was not always a source of gain, because, where gas engineers used producers for heating retorts they tried to conserve as far as possible all the heat that came out of the producer, and to carry it forward so that the gases might be used at as high a temperature as possible, and in that way they did not see any benefit to be got by using the heat from the producers to heat up the incoming air and water vapour. With regard to the remark about using some of the waste gases under the producer, he saw lately that a patent had been taken out in which that method was adopted in connection with large producers for heating retorts in gas works. Of course, the reason for using a fairly large percentage of steam in a producer was to stop the formation of clinker, and this patent was brought forward to keep down the percentage of hydrogen, while keeping the temperature of the fuel bed low to prevent the formation of clinker by using the carbonic acid in the waste gases. He understood it was working in a fairly successful manner, but he could not speak about it practically as he had not tried it. Perhaps he might do so some day. It seemed to offer a means of using less steam and might also be a source of economy. With regard to suction producers generally, they seemed to offer a very economical means of power, and no doubt they would be improved as time went on. There were many failures in connection with suction plants, and many of the difficulties which cropped up were known to the City Gas Department, because in nearly all cases where suction gas had been introduced users were glad to get

standby connections from the gas meters. It did not suit the Gas Department to supply these standby connections free, and arrangements were being made so that such connections might be fitted by paying the interest on the capital that was employed. By arrangement a certain amount of gas must be used, and the cost of putting in connections and meters covered. Up till now the Gas Department had found the standby connections pay very well.

Mr ANDREW MAY (Associate Member) said he had no doubt that a great many would have liked to have heard from Mr Campbell more about the application of the gas-driven machine to marine propulsion. Mr Campbell had said, "The capacity of the generator should be large enough to allow for a wide margin in the quality of the fuel consumed, and to reduce the amount of attendance required for feeding and clinkering the generator." He would like to ask Mr Campbell what was the usual allowance of B.H.P. per square foot of fire grate for burning anthracite coal, and what was the ratio of height to diameter of the grate. There seemed to be a great deal of variation, for in the recent trials conducted at Derby it varied from 30 B.H.P. to 5·7 B.H.P. per square foot of fire grate. Referring to continuous working with a suction plant Mr. Campbell said, "it is always necessary that the gas generator should be in duplicate, *i.e.*, two gas generators with one set of coke scrubbers." He (Mr May) thought it was hardly correct to say *necessary*, as there was a case of a single suction plant which worked continuously for 40 days and travelled 500 miles of canal. He referred to Messrs Thornycroft's canal barge fitted with a 35 B.H.P. gas engine and plant. Moreover, the objection to duplication, as far as marine work was concerned, was the increase in weight and space. In the marine installation, illustrated by Fig. 15, did Mr Campbell mean that he would duplicate the generator to enable him to get continuous running? He would also like to ask how the cooling and cleaning of the water were operated, and how it was taken out of the ship.

Mr Andrew May.

and further, if the discharge water from the jackets and scrubbers ran into the bilges or into a tank, and was then taken out by the bilge pump; also, if the bilge pump was worked separately, or off the main engines? Mr Campbell had also said, "There is no doubt a large field open to the successful marine gas engine for small craft requiring engines under 300 B.H.P., but beyond this power at the present time the matter is a question of prophecy." That might be true as far as suction plant using anthracite coal was concerned, and even with vessels up to 600 H.P. much success could be obtained when it was considered that the total weight of machinery was less, the space occupied was less, and the coal consumption was about one-third that of the reciprocating steam engine. There was no doubt that suction producers for burning bituminous coal would yet be successful, although there were a few difficulties to be overcome. Mr Rowan had mentioned the matter of putting the exhaust gas through the producer again in place of steam. He himself happened to have read a paper showing that that was already done in America. Supposing a gas engine were to exhaust a mixture which had misfired and the mixture were to pass along the exhaust pipe to the producer: Would the charge be fired in the producer? It was often the case that the mixture would pass out of the cylinder unfired, especially in starting; of course, during that period a switch cock on the exhaust pipe would probably be open to the atmosphere. As to generating steam by the exhaust gas that was very successfully done in the Beardmore-Capitaine Marine Gas Engine. The steam raising apparatus consisted of a steel cylinder containing a nest of tubes, a sort of water tube boiler; these tubes contained water, and the hot exhaust gases passing round about raised a sufficient quantity of steam for the producer. These boilers also acted as silencers. There was, however, the question of ignition, and he would like to know whether Mr Campbell used a low or high-tension magneto ignition? Was the

magneto of the rotary or oscillating type? He thought low tension was preferable where there was moisture, as in a ship.

Mr ROBERT WATSON (Member) expressed a wish to draw attention to a statement by Mr Campbell who, in speaking of an engine working on the Clerk cycle, said "the increased number of ignitions per minute had a detrimental effect on the life of the cylinder and piston of the motor cylinder. These ignitions, occurring at every revolution instead of every second revolution, prevented that cooling down of the cylinder which is such a prominent feature in the Otto cycle. The consequence was that, even in a period of six months, the cylinder required reboring and a new piston and rings fitted to it." Now Mr Dugald Clerk, who was the inventor of the first successful gas engine which had an explosion every revolution, maintained that the cylinder walls never got any hotter than 212 deg. F., and perhaps not much hotter than the circulating water. It was well known that a pan with the bottom soldered on with tin which melted at about 444 deg. F., could be put on a gas flame or hot plate, and so long as there was water in the pan the solder would not melt and the bottom would remain intact. To try the effect of a gas flame on polished cast iron, such as the working surface of a gas engine cylinder, he got a small cast iron pan ground and polished outside on the bottom, and boiled water in it for 2½ hours on a burner of large size, with the result that there was no action on the metal, which was as bright as when first placed on the flame. It might be contended that the iron of gas engine cylinder walls was under different conditions from the pan bottom; that was so, but he considered the test in the one case quite as severe as in the other. Undoubtedly the temperature was higher in the gas engine cylinder (about 2000°C.) than in a Bunsen flame, but in the experiment the flame was constant while the explosion was not, and in the cylinder almost instantaneously there was a non-conducting layer of air formed next the metal and enclosing a core of hot gas and flame.

Mr Robert Watson.

Without this non-conducting layer, almost all the heat generated by the explosion would pass into the water jacket and the engine would not work. It would be a pity if Mr Campbell's statement should deter others from experimenting with this type of engine. He did not mean to discredit Mr Campbell's statement about the cylinder requiring reboring, but he thought he (the Author) had attributed it to the wrong cause. It might be due to the heating of the piston, for if it was not water cooled and was a fairly good fit it might get hot, and, by being expanded, seize or jam on the oxidised walls. The surface of the rings would get oxidised with a very hot piston which would cause leakage between the ring and the cylinder wall, producing erosion similar to what took place in guns, although not to the same extent, as gas did not contain a lot of solid matter like gunpowder. A hot piston and rings destroyed the lubrication of the cylinder, and when that happened no cylinder could last long. Mr Campbell described what he considered one of the best types of modern gas engines, namely, that made by the Nurnberg Company, Fig. 6. This was a double-acting engine on the Otto cycle and had an explosion every revolution, the same as in the Clerk cycle, and, therefore, would be liable to great wear in the cylinder if the ignitions were frequent. Table No. XI. was not of much value, as it stood, in making a comparison between a suction gas engine and an engine using town gas. The suction gas engine required more attendance and took up more space. He was not sure that suction gas would give the same power as town gas and, if not, there would be the additional first cost of a larger engine and first cost of producers, etc., beside greater depreciation and up-keep charges. In a paper read before this Institution six years ago, Mr Clerk gave the relative powers of large gas engines as 1000 H.P. for town gas and 600 H.P. for blast furnace gas. Suction gas was stronger than blast furnace gas. Perhaps Mr Campbell could give an analysis of suction gas with the proportions of gas and air which

were used, also a comparison of the H.P. developed when using town and suction gas respectively. In the first part of the paper Mr Campbell had dealt with one aspect of the question and had given some interesting details about the producer, but he evidently wished to limit himself, as the subject was a large one and could not be treated in detail within the limits of a paper of usual length, but still there were some points passed over which he might have touched on. For example in the illustration he gave of his launch engine, it would be noticed that there were two cranks up and two down—Mr Campbell did not say why he adopted that arrangement of cranks. The considerations affecting crank sequence in gas engines were different from those relating to steam engines, and in the engine illustrated the momentum couples balanced each other, and there was an explosion every stroke; other crank arrangements, he thought, would not combine these advantages. In the same engine, spur gear was used for driving the cam shaft; in a way this was a reversion to an old practice abandoned some time ago. In the early gas engines bevel wheels were used for driving the cam shaft but were given up in favour of skew gearing, as it was found that the movement of the crank shaft set up wear and tear by putting the wheels in and out of gear. In vertical multi-cylinder engines this did not occur, as there was always one cylinder in explosion and compression, thus keeping the crank shaft pressed down, and preventing any movement other than rotary. But in single cylinder engines, as sometimes fitted to motor cars, this shaft movement existed, and he thought it was an important point to keep the centre of the cam shaft level with the crank shaft when the engine was vertical. To do this it would sometimes be necessary to skew the centre line of the valves so as to catch the centre of the cam shaft, although doing so did not make for good working of the valves, but it was, perhaps, the least of two evils. Gas engine valves worked much better when vertical, for horizontal valves had a tendency to droop, and there was

Mr Robert Watson.

so little weight in the gas that the back rush was not able to bring the valves home true to their seats.

Prof. A. JAMIESON (Member) said the phrase "20 B.H.P. for a penny," used by Mr Campbell was incomplete and incorrect. What Mr Campbell and other suction gas engine plant makers no doubt meant was, that for every 20 B.H.P. of their plants working at full load for one hour the cost would not average more than one penny. Again, Mr Campbell said "The statement referred to is quite intelligible, and is as easily understood by power users as 'electricity for motive power purposes one penny per unit.'" Now, it so happened that the expression "one penny per unit" was quite correct and complete; for it meant one Board of Trade Unit, which was equal to one kilowatt-hour, or $1\frac{1}{3}$ horse power working for one hour.

Mr RICHARD A. MCLAREN (Member) said he had intended to make a few remarks about Mr Campbell's "20 B.H.P. for a penny," but Professor Jamieson had rather anticipated him. He thought, however, that most engineers would understand what Mr Campbell meant. The phrase "20 B.H.P. for a penny" at all events conveyed a certain meaning to people who were engaged in trade, if not to those engaged in professorial pursuits. Mr Campbell said that the claim for the gas engine of "20 B.H.P. per hour for a penny" was as fair as the statement that a boiler evaporated so many lbs. of water per lb. of coal; but he thought that was not so. The statement regarding the boiler gave the efficiency of that boiler as compared with any other, and was a precise and scientific basis of comparison. In fact, it took account of the only factor which varied in comparing boilers. The gas-maker's phrase, on the other hand, he thought, more resembled one of the placards of the "Daily Record" which was only meant to catch the eye and the halfpenny of the passer-by. The question of coal consumption was after all a very minor matter in a comparison between gas and steam plants, as a great many other things had to be taken into account. What

the purchaser wanted to know was the cost of upkeep over a number of years and what reasonable freedom from stoppage he might expect; also, what the capital cost of the plant would be. Taking the capital cost, a steam plant of high class could be got for about half the cost of a gas plant, whilst it would last longer and take up less space, and space meant money in most cases. That comparison also did not take into account the fact that a duplicate plant was required with gas. Mr Wilson had brought out very well the necessity for duplicate plant, and had showed that the Corporation authorities were doing remarkably well by the charges for standby connections, etc. The sums that had been earned in that way by the Corporation ought to be added to the pennies for "20 B.H.P. per hour." There was a recent illustration in the Manchester district of what might happen. In the case he referred to, a manufacturer did not put in any standby and did not couple up either to the town gas or electric supply. The result was that when he had a breakdown his works were idle for close on a month. With regard to the question of reliability, tests carried out by the Highland and Agricultural Society on *gas plants* had given some information. At those tests the engines were run under the best possible conditions, as they were run by the makers, and the makers were allowed to provide their own men, but it was stipulated that there should *not be more* than two men working each set. Of the six 20 B.H.P. sets that were subjected to trial, only three completed the full load trials without stoppage and only two completed the half load trials. Of the eight horse power sets, four were entered for the half load trials and only two completed them without stoppages; that showed that there was a good deal yet to be done to ensure reliability in gas plants. Turning to Table I., it appeared at first sight that the cost of producing power by gas was a good deal cheaper than by steam, but those figures were not so impressive when one looked into them. In the first place, there was nothing said about the capital cost, and

Mr Richard A McLaren.
that made a very great difference. In the second place the steam seemed to act as a standby to the gas. If the works costs of the gas plant at Guernsey were so much less, how was it that the steam plant was still used to generate half the total number of units from January to March, 1906? Did that mean that the gas plant was out of order for half the time? From Table I. also it seemed that the load factor with the steam plant was only 68½ per cent., but the load factor of the gas plant was 86¼ per cent. That vitiated the comparison to a large extent. In the same Table repairs covered buildings, machinery, transformers, etc., and one could not tell what proportion of repairs belonged to the gas plant and what to the steam plant. It was quite possible that the whole might have been caused by a breakdown of the accumulators or something similar. In Table III. they came to their old friend "20 B.H.P. per hour for a penny." That was obtained on a six hours' test run by the makers with a new engine. From Table IV., when the same engine was running a little later, it cost 1·6d. for the 20 B.H.P., an increase of 60 per cent. Then again from Table V., with another engine, the cost had gone up to 2·9d. for 20 B.H.P., an increase of 190 per cent. There appeared, however, to be some error in connection with the last figure, for the cost per Board of Trade unit was given as a penny, that was to say, in round figures, three farthings per electrical horse power—20 E.H.P. would, therefore, cost 1s. 3d., and yet the cost of 20 B.H.P. was given as 3d. Some explanation of this was desirable. With respect to water consumption, Mr Campbell had mentioned that it was from 1½ to 2 gallons per B.H.P. per hour, but from all the information that he had been able to obtain it seemed that three gallons was much nearer the mark. It would be a very old-fashioned steam plant that took as much as 30 lbs. of water per horse power per hour. It was constantly claimed by gas engine makers that the gas apparatus could be handled by unskilled men, but he did not think that could be maintained. Any

gas engine was obviously more complicated than a steam engine of equal size. A good many had some experience of that form of gas engine used on a petrol motor car and knew that the majority of the engine troubles were due to mixing and ignition; there was no comparison between a steam car and a petrol car in that respect. The same thing applied to large gas engines used for stationary purposes. The troubles due to ignition and proper mixture of gases were very serious. There was also the question of wear and tear. The wear and tear of a gas engine, both with regard to cylinders and valves, was very much greater than in a steam engine of corresponding size. There were gases at very high temperatures, and dust, and with suction gas plant there were products like carburretted hydrogen and others that formed deposits which caused very great inconveniences. It meant that while a machine was laid off for cleaning another machine had to take its place. Another point which had not been touched upon was the danger of producer gas. He remembered reading a short time ago, in one of Mr Longridge's annual reports, about a case in the Manchester district where there was a large gas engine which had been stopped for repairs. On restarting something went wrong with the ignition, and while working at it for about twenty minutes—the pipes from the producer were open to the air—an explosive mixture was formed in the receiver, which was a large cast iron vessel, and it exploded very violently. Fortunately no one was injured. In the present state of the law any apparatus which caused risk to workmen or attendants had a distinct money value, and the Insurance Company had to be paid such premiums as would cover the risk. He would not say anything about the poisonous nature of suction gas, but that was also a point which was entitled to consideration. The gas engine had been very much improved in recent years and Mr Campbell had been one of those who had contributed to that improvement, but he thought it would be a long time before those interested in steam plants would have to shut up their works.

Mr James Lowe.

Mr JAMES LOWE (Associate Member) said hitherto it had been difficult to obtain actual figures for anything but fuel consumption with producer gas plant. The really essential information relating to attendance and other charges was required, and the information given in the paper on these points was very meagre. He was very glad to have the assurance that Mr Campbell objected to the extravagant claim of 20 B.H.P. for 1d.; but Mr Campbell attempted to justify it a little later in his paper, and he did not see why, if Mr Campbell objected to it, he should attempt to justify it immediately afterwards. He had no doubt that Mr Campbell would be the first to challenge the same claim if put forward for a steam engine plant using 1½ lbs. of coal per B.H.P. per hour at 6s. a ton, and this claim might with equal justice be made. However, power users were not so much concerned with economy in fuel as with economy in £. S. D., and it was well known that gas engines using town gas required very little attendance, considerably more being required with suction gas plant. He knew that there were hundreds of engines using town gas in Glasgow and elsewhere, where practically there was no attendance. It was quite unfair to consider the troubles of the petrol motor, as applicable to gas engines, as a previous speaker had tried to do. The wear and tear in the case of motor cars and stationary engines running at moderate speed were not comparable. The attendance charges on the suction gas plant were practically constant within limits. Any plant from 10 to 100 horse power required practically the same amount of attendance. The attendance charges per B.H.P. per hour would therefore increase as the size of the engine diminished. The gas plant also cost more in proportion with small powers than with large powers, and that fact had also some bearing. These considerations tended to make the power from suction gas plants rather more expensive with small powers than with larger powers, and showed that power up to a certain size with town gas would be cheaper

than with suction gas when all costs were considered. The limiting size at which both costs were equal would, of course, depend upon the price of gas, and on attendance and capital charges, cost of water, cost of greater foundations, greater space occupied, repairs to gas plant and cleaning of valves, cylinders, and pistons. With an ordinary gas engine a cleaning once in six months was necessary; in suction gas plant, however, a cleaning was required about once a month. Further, the cost per unit of energy generated would depend upon the nature of the load—whether constant or fluctuating, and whether required continuously or only intermittently—and the smaller the load factor the larger the engine at which equality of commercial efficiency occurred between suction gas and town gas. In most factories engines were not run continuously or at full load. Frequently they were run at less than half load. Mr Rowan had pointed out that when suction gas plants were run at powers greatly less than they were capable of developing, the troubles with the gas plant increased, and, consequently, the necessary attendance must be very much increased. Mr Campbell had given the approximate saving for fuel only, and Table XI. showed a saving of 60 per cent. by the substitution of suction gas for town gas when the latter was 1s. 9d. per thousand cubic feet. That was the price for power purposes in Glasgow, and he was quite content to compare the engines on that basis. Dealing with a 50 horse power engine (he had in his mind an instance where such an engine was bought for £225, and the report of the Derby trials showed that the average cost of a suction gas plant was about £12 per B.H.P.), he did not think that an injustice would be done, if one took a suction gas plant of 50 B.H.P. at £9 per B.H.P. That would give a capital cost of £450, as against £225 for 2500 working hours per annum at full load. The load was most favourable to the suction gas plant. The cost for town gas would be £175. Taking Mr Campbell's percentage economy, the cost of fuel for the suction

Mr James Lowe.
gas plant would be £70. In addition, two gallons of water per B.H.P. would be required, and that would mean a consumption of 250,000 gallons per annum, costing £4 3s. 4d. Then there was interest at 5 per cent., and depreciation at 10 per cent. on the additional £225, which would represent, together, £33 15s. Taking Mr Campbell's figure of £3 for repairs, and adding in the charge for a standby gas meter at £2, the total cost would be £112 18s. 4d., leaving a balance of £62 3s. 8d. in favour of the suction plant. Out of this balance attendance had to be paid, increased cost of cleaning of valves, etc., larger foundations, and greater space occupied. There were other drawbacks, too, enumerated by previous speakers—the danger at times of escape of gas and explosion, and also the trouble of handling coal and dealing with ashes, which, in a great many places in a city, would be an insuperable obstacle to the use of a suction gas plant. When one came to consider the figures in that way, it seemed to him that the costs were really about equal with town gas and suction gas at 50 H.P. There were now so many rivals catering for the custom of power users that it must be a matter of great difficulty for the latter to decide which means to adopt, especially in the face of misleading advertisements. Mr Campbell had given a comparison with electricity showing that, at a penny per unit, it was nearly twice as costly as town gas at 2s. 6d. per thousand cubic feet; and when gas was sold at 1s. 9d. he did not think there was much field for the electric motor, because in that case the difference in cost would be still more in favour of town gas. Probably the field for the gas engine with town gas was from 5 to 50 H.P., and for electricity from 3 to 5 H.P., or perhaps to slightly larger powers if the load were intermittent. Similarly the town gas engine might be most economical for greater loads than 50 H.P. if intermittently used. Above 50 H.P. suction gas became a very formidable competitor, and probably the cheapest method of generating power if the load factor was of a constant nature. For all sizes it had a very large field of application where there was no town gas supply.

Mr William Alexander.

Mr William Alexander remarked that he had taken some interest in suction gas plants, and the engine he had had most experience with was an 80 B.H.P. National, which had been working at about $\frac{1}{8}$ of full load. Leaving out of account depreciation and similar general charges, it realised about 10 B.H.P. for 1d., including coal, attendance, oil and water, and 15 B.H.P. taking coal alone. This was taken over several months, and included the coal for standby losses. Assuming the constant load to be 54 B.H.P., the costs per hour were approximately as follows:—

Coal, ...	3·66d.
Attendance, ...	1·00d.
Oil, ...	·50d.
Water, &c., ...	·24d.
Total,	5·40d.

or, 10 B.H.P. per hour for a penny. Some of the previous speakers wanted to know if it was not possible to use up the waste heat from the exhaust gases, but he thought that in this case the game was hardly worth the candle, as the cost of apparatus would be more than the result was worth. One annoying feature of suction plants that had not been mentioned was the frequency of back firing, a name he had heard given to explosions which took place in the mixing chamber. This often occurred when the atmospheric pressure was low. On one occasion, while speaking to the manager of an engineering works in Edinburgh where there was a number of Crossley engines worked from a central producing plant, most of the engines were firing away like a battery of cannon. He asked what was wrong with the engines, and was told, nothing, that this always happened when the atmospheric pressure was lower than usual. A point had been marked on the barometer, and the foreman knew that when

Mr William Alexander.

the mercury fell below that mark and the engines were back firing there was no need to trouble about it. Formerly the engines were stopped and taken to pieces to try and find out what was the matter, but such a procedure proved rather expensive. The most serious thing for Scotch users of suction plants was the probable scarcity of anthracite. A great number of people had trouble with their gas engines because the coal they were using was not of a good quality. In the case he referred to, there were about two barrow loads of clinker at the end of a week, besides a little that was taken out every morning, but he had come across a case where there was much more than that after working only half the time. There were great varieties in the qualities of anthracite, and there were only one or two pits where reliable coal could be obtained. One of the best coals was that which came from the Coltness Pit called Hossack Rigg, but the price had been rising. In the spring it was 11s. 9d., delivered at Glasgow; it rose shortly afterwards to 12s. 9d.; and it now stood at 13s. 9d. per ton. Only a week ago a fault was discovered in the workings, and now people could hardly get that coal at any price. The coal owners were working through solid rock to try and pick up the seam again. He himself had considerable trouble at first with the engine stopping, but this was mainly through not being conversant with the working. A very important thing was to keep all the joints in connection with the sparking plug clean, because if this was not done sparking took place at the wrong time, which caused trouble, owing to the engine slowing down and sometimes stopping.

Mr Robert Royds, M.Sc. (Member), drew attention to the arrangement of the valves shown in Fig. 13, and said it would be noticed that there were two cam shafts—one inside and one outside; also, that the cylinder casting was an intricate one, and the arrangement involved a large amount of unnecessary cooling surface. He wished to ask Mr Campbell what decided advantage this arrangement had over one with all the valves

in the cylinder end or cover, and all operated from the top cam shaft. The latter would dispense with one cam shaft, would reduce the complications in the cylinder casting, and would reduce the cooling surface, thereby ensuring a more economical engine. There would be rather more trouble when the cylinder end had to be detached, but that should only occur occasionally. There was a point to which gas engineers did not seem to pay sufficient attention, and that was the temperature gradient which occurred in the cylinder liner or cylinder end. He had made some rough calculations regarding the average temperature gradient in the metal of gas engine cylinders, and had found the average to be much greater than the average temperature gradient in the case of boilers. If one side of a metal wall was at a higher temperature than the other, the relative expansions would induce some kind of internal stresses. This of itself was not a serious matter, but when allied with the other stresses to which the metal was subjected might account for the cracking of some cylinder liners and cylinder ends.

Mr GEORGE T. DUNCAN (Member) said he had been many years associated with Messrs Tangyes Ltd. who were extensive manufacturers of steam and gas engines and suction producers, and he could not allow the opportunity to pass without emphasising his conviction that the picture had been overdrawn by the ardent opponents of the suction producer, who evidently recognised its onslaught, and apparently pinned their faith to steam or town gas. He thought it would be within the knowledge of most members that, during the past three years, the progress of the gas engine, in conjunction with the suction producer, in sizes up to from 150 or 200 B.H.P., had been marvellous. There were hundreds of examples in Scotland, and he might safely assert that in the majority of instances the users of the suction gas plant were its most zealous advocates. It had been inferred that the coal and water consumptions were unreliable. There was, however, no

Mr George T. Duncan.
difficulty in getting any well known maker to guarantee a coal consumption of less than 1 lb. per B.H.P. per hour, at a suitable working load, and the figures given by Mr Campbell as to the water consumption were those generally borne out by experience. There was practically no dust and very little ash from a suction producer, using a suitable anthracite coal, which was procurable from quite a number of collieries in Scotland as well as Wales; and where gas coke was available, it could, by arrangement, be utilised as fuel. The space occupied by a suction producer was surprisingly small. It could be erected inside; it required practically no foundation, and no ponderous chimney; and, after starting, emitted no smoke to pollute the atmosphere. It was a mistake to suppose that gas engines and producers required to be erected in duplicate for ordinary work, and that skilled attendance was necessary. There was an example on record of a 100 B.H.P. installation working 140 hours per week for 12 months, and of similar power being adopted for extensions, after a saving of several pounds per week had been demonstrated, over a combination of steam, town gas, and electricity. It was true that a loss of power of about 15 per cent. was suffered when an old type "hit and miss" town gas engine was converted to "suction," but that was a matter capable of easy adjustment when a new installation was contemplated. With ordinary precautions, the risk of danger was, to a great extent, non-existent. Gas was only made when required by the engine. It was generated slightly below the surrounding atmospheric pressure, and there was, therefore, no fear of gas escaping. The working economy of the suction gas engine was thoroughly established, on the evidence of users during the past three years, and the cost of upkeep was certainly not more than that of an engine using town gas. The town gas connection might be characterised as a luxury rather than a necessity. In the majority of instances it had not been applied, and in some it was not available. A building

contractor who had town gas connected informed him that after nearly two years experience of a 44 B.H.P. suction gas engine, he had used only 2000 cubic feet of town gas, mainly for experimental purposes. The repairs during that period had cost about £2. His attendant, a machineman, was responsible for the requisite attention and cleaning, without any addition to his wage. A user of a 39 B.H.P. suction gas engine for driving wood working machinery, replaced a 12″ × 24″ steam engine and boiler, costing £3 per week of 51 hours, for coal, wages, etc. The cost of the suction gas engine, including coal, water, and oil, with 5s. extra to a man for attendance, etc., was about 13s. 6d. per week of 56 hours. The saving in space was over 50 per cent. A suction gas engine of 115 B.H.P. had been in operation 12 hours per day for two years, at about 15s. per week for fuel. A town gas engine of similar power cost from £3 10s. to £4 per week for gas. A 23 B.H.P. engine had been working daily for 2½ years, driving machine tools, and a dynamo for works lighting. The renewals had consisted of firebrick lining for generator, and coke for the scrubber. There had been no town gas connection, and the users affirmed that the suction plant had been the most profitable piece of machinery they had ever bought. In some instances, the water was drawn from a well or other source of supply, and driven by a pump, (worked from the engine) delivering into an overhead tank for supplying the generator and scrubber. With regard to the effluent from the coke scrubber, he might add that Messrs Tangyes Ltd. had recently designed a deodorizer, of which an illustration was given in Fig. 20. This arrangement completely deodorized the water after it left the scrubber, taking out the fumes which afterwards passed off through the exhaust pipe. It also cleansed the scrubber water, enabling it to be used over and over again, thereby effecting a considerable economy in the amount of water required for a suction gas producer. The water which passed through the scrubber for cleaning and cooling the gas

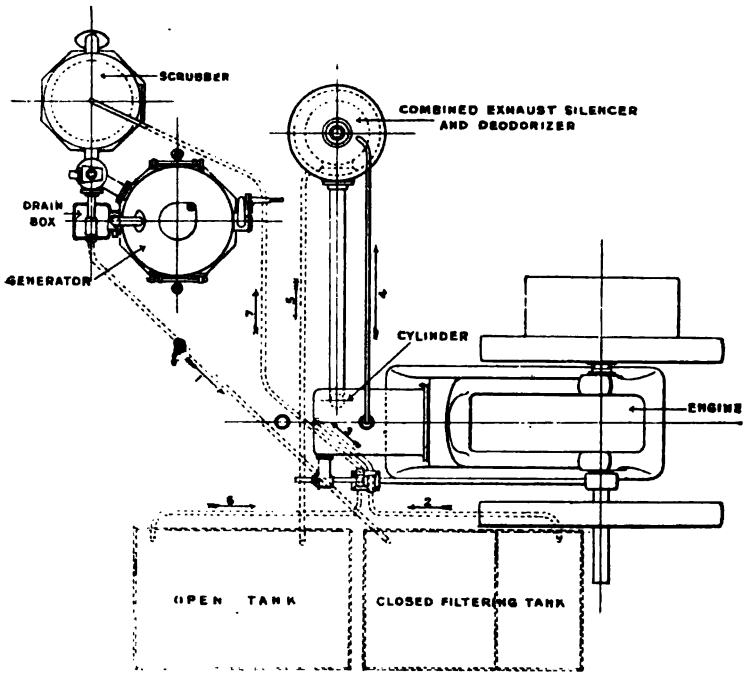

Fig 20.

had usually been carried into a drain box with a water seal, whence it passed to the drain as waste; but as would be seen from the following description, this waste of water was avoided, and it was only necessary to replace the small amount of water lost by evaporation. As shown in the Figure, two tanks were provided, one open and one closed. The water, after passing from the scrubber to the drain box, gravitated through pipe (1) to the closed tank, where it was filtered, so as to cleanse it from dust and any other solid matter it might contain; the filtered water was then taken through pipe (2) by a small pump, and forced along pipe (3) through the cooling jacket of the cylinder, after which it passed by pipe (4) to a combined exhaust chamber and deodorizer, in which the water

was freed from the objectionable fumes by the heat of the exhaust chamber, and the gases passed to the atmosphere with the exhaust of the engine cylinder. The purified water then passed through pipe (5) to the open tank, from which it was pumped through pipes (6) and (7) to the scrubber for cooling the gas as it was made in the generator, passing to the seal box to be afterwards purified, as previously described. The arrangement had proved successful; and, in localities where water was scarce, the slightly additional cost was soon repaid. The deodorizing apparatus might also be utilised with the ordinary arrangement of suction gas producer installations for disposing of the objectionable fumes before passing the scrubber water to the drain. It further disposed of the necessity for providing a special outlet or drain to take away the scrubber water.

Mr Thomas Turner (Member) observed that in looking over the discussion which took place at the last meeting, and after having read the paper, he saw that some mention had been made of the question of utilising the waste heat from the gas engine. One speaker said: "As to generating steam by the exhaust gas, that was very successfully done in the Beardmore-Capitaine Marine Gas Engine." He rather thought that that type of gas engine would raise steam by its exhaust to a greater extent than some of the others, because the quantity of heat expelled was somewhat greater. He was more particularly a steam engineer, and did not profess to know all the ins and outs of gas engines, but he knew something about steam and steam raising. Mr William Alexander said he thought that in utilising the exhaust heat "the game was hardly worth the candle" as the cost of apparatus would be more than the result was worth. He (Mr. Turner) happened, however, to be associated with a boiler specially designed to save the waste heat from the exhaust gases, and he thought that members of the Institution would not mind being told what results were achieved in this con-

Mr Thomas Turner.

nection. The boiler was known as a Wilson Patent Counter-flow boiler, and the advantage obtained by its special design lay in the fact that the exhaust gases were delivered from it at a temperature as near to that of the feed-water as possible. The feed was always very cold relatively and the gases had practically all the heat that it was possible to get taken out of them before leaving the boiler. The steam space did not extend the whole length of the boiler. Of course, there was no combustion of the gases as they entered the inlet chamber of the boiler, but there was the sensible heat of about 1000 degrees F. that was in the gases. To get the best results, the boiler must be set close up against the engine, and the pipes lined with firebrick of any thickness from 3 to 4 inches. The evaporation from the boiler varied from 2 to 2½ lbs. per B.H.P. per hour of the gas engine, depending upon the closeness of the boiler to the cylinder of the gas engine. With these boilers some of the large users had obtained the best results they had ever got. One firm had about 12 of them with a gas engine installation of 3000 horse power. The saving was 70 tons of coal per week, so that there was assuredly a very considerable advantage in utilising the exhaust. Taking the weekly saving as amounting to 3,500 tons of coal per annum, that, even at 5s. per ton, would be about £880, which sum would pay a good interest on a very large capital expenditure. These boilers were made even for engines of from 20 to 40 H.P., and upwards. Taking the water evaporation at 2½ lbs., it would, with a 500 B.H.P. engine, mean 1250 lbs. of water per hour, raised to steam at a pressure of 130 lbs. per square inch, and it might be pointed out that any pressure could be obtained. Now, 20 lbs. per I.H.P. per hour was required for a good condensing steam engine, so that 1250 lbs. represented, in this case, enough for 62½ I.H.P., or, say, a 50 B.H.P. steam installation from a 500 B.H.P. gas engine. The amount of power that he had indicated represented in a comparative way the amount of

heat that one could get out of the exhaust, and he believed that the exhaust heat, or, rather, the steam made from it, had even been applied to help the gas engine, in a direct way, but he had not heard if it had been a success. Perhaps Mr. Campbell would be kind enough to have something more to say regarding the utilisation of the exhaust heat; for he felt sure Mr Campbell would have had some experience in this connection. Quite a large number of the boilers already referred to had been supplied. There were a number of chemical and manufacturing processes worked continuously day and night by gas engines, and in these a very large saving of coal could be effected during the year by utilising the exhaust gases.

Mr CAMPBELL asked Mr Turner if steam could be obtained sufficiently dry by using one of these boilers, because he had heard that the steam was very wet and saturated, and he would like to know if Mr. Turner had had any experience regarding this matter.

Mr TURNER said he had not. He had not himself applied it to an engine to measure the moisture. His customers had secret processes, and he hardly knew what they used the boilers for; but they had communicated the above figures. He could not see why the steam should be any wetter in a boiler of that class than in any other boiler. There was ample evaporating area and ample steam space, and the steam should be as perfect as any other.

Mr R. T. NAPIER (Member) asked Mr Campbel if they were within sight of the time when the gas engine would be as easily reversible as a steam engine with link motion. He was aware that reversing arrangements, more or less complicated, were in use, but the ideal he had not yet seen.

Mr REGINALD J. N. WILLCOX (Member) considered that as the object aimed at in the paper was the discussion of the merits of the gas engine in conjunction with a suction gas producer, with special reference to the latter, it seemed to follow that attention must necessarily be restricted to the sizes of engine associated

Mr Reginald J. N. Willcox.

with this type of producer and, therefore, a reference to very large engines working with plenum producers or blast furnace gas was hardly an omission on the Author's part. He had been struck by the intimate knowledge of this latter type of gas engine displayed by Mr Rowan when opening the discussion, and felt sure that a paper from him on this subject would be of great value to the Institution, more especially if it dealt with the severely practical side of the question. Personally he regarded the suction producer from the standpoint of the user of small or moderate size gas engines, say up to 22-inch cylinders, in shipyards and engineering works, and of one who had spent a few very interesting years as a repairer of gas engines of all sorts and sizes. The statements of the various makers as to what they could do and what the other fellow could not do were bewildering. For instance, many had told him that a coke scrubber of very small dimensions was all sufficient; another said he strongly advised a sawdust scrubber in addition; and to-day he was assured that he must have con- and contra-flow scrubbers plus centrifugal drier and cleaner (as in blast furnace work) as well as a centrifugal or whirl chamber, and a miniature gasometer. Indeed, he was almost expecting the man with a small boiler and steam jet to turn up. The amount of available information on suction producers was very limited and, inasmuch as Mr Campbell's facts had already been well criticised, he had resorted to the published particulars of the Derby trials for further material. An analysis of these particulars showed some instructing facts. It would be found that the ratio of sectional area of producer to the grate area varied from 1·85 to 0·29. The ratios of volume to cross section were equally divergent, varying from 2·5 to 1·78. Although the average ratio was about 2, suction producers apparently varied in vertical section from something like a blast furnace to parallel, and the reverse of a blast furnace. Some were very tall, and others very squat. Now in driving shipyard machinery through the

intermediary of electric plant, the engine was subjected to frequent and large changes of load, often to very sudden and large increases after it had been running dead light for a long enough period to permit the fire getting dull. Since even a temporary stoppage could not be looked upon with equanimity, it was interesting to attempt to ascertain how the general proportions of the producer affected its reliability in so far as answering promptly to an unexpected and heavy load. He was naturally inclined to think that a small grate area would intensify the draught at light loads and so keep the fire in better condition than the large grate for meeting a sudden demand, but the trials of from light load to full load did not bear this out. In these trials the second best producer (in this respect) had a fairly small grate; but the smallest grate did no better than a large one, and two of the smallest grates stopped the engine. The largest grate of all was away in half-a-minute, and was easily the best. But discarding this idea and comparing the volume of the piston displacement per minute to that of the producer, it would be found that it varied from 83 to 21·6 and that the reliability of the plant for dealing with sudden large loads varied inversely and practically in proportion to this ratio. The height of the producer appeared to have little to do with this feature, which was in very truth almost the most important so far as shipbuilders and engineers were concerned. The regularity of the power house had much to do with the financial success of the works, and any economy of fuel gained at its expense was, to his mind, a very false one. (Gas engine makers please note). Other things being equal, reason seemed to point to a fairly small grate area relatively to cross section; not to volume, as in the Campbell producer. He attributed the success of the large roomy producer to the fact that it would act somewhat as a reservoir of good gas in various stages of production, and that instead of the supply of good gas being immediately depleted so that the engine stopped, as in the small producer, the quality was

Mr Reginald J. N. Willcox.

averaged to a certain extent, and was good enough to keep the engine at its work until the fire and producer generally had adapted themselves to the new state of affairs. He had recently been considering the question of new power plant for a small shipyard, and after leaving gas engine makers behind, but basing his ideas on what had been done with plenum producers in units of similar size, he had every confidence that the fuel consumption would not exceed 1·3 lbs. per H.P. per hour taking a 40 per cent. load factor. And after providing most liberally for a spare producer, depreciation, maintenance, interest and other charges, he did not think the cost would exceed 0·7d. per electrical unit of power at the motors with anthracite at 12s. per ton. He might say there already was an electrical equipment so that he was not reckoning charges on this plant in the 0·7d. And since practically one-half of this power would be directly transmitted to the line shaft by one of the engines, the dynamo engine belt and line transmission losses to that extent were saved. Nevertheless it was evident to those having experience that while fuel was a very serious item, it was not the predominant factor that gas engine makers and enthusiasts would have one believe; and with all deference to them he preferred an outside supply of electricity at ·75d. per unit for a shipyard load to all the gas, oil, or steam plants in the world. Shipyard folk, again with all deference, were hard masters to the most simple steam engine, and to an erring gas engine they were intolerant; and, therefore, experience told him that the great convenience of having nothing to worry about but a switch which turned on the motors as simply as a lamp was a considerable commercial asset. But it did not run to ·25d. per unit more, and worry was a thing which never appeared in the balance sheet. Speaking of coal consumption and economy, it seemed at first extraordinary, but it could be proved that it was sometimes cheaper, to run an existing steam plant which took from 5 to 6 lbs. of coal per I.H.P. per hour at 6s. 6d. per ton, than to replace it with a gas plant, assuming,

of course, that the steam plant would still run for a few years with ordinary maintenance. In his opinion, fuel consumption was a secondary consideration, since any one good gas engine was practically equal to another. The primary feature was reliability; a fact that could not be too strongly impressed on gas engine makers. From Table XIII. of the Derby trials' result, it would be seen that the compression of the charge in one engine reached 200 lbs., and in many others was not far behind this figure, with the result that the initial pressure reached as high as 510 lbs. per square inch. With producer gas engines the charge was fired with the crank well below the centre; he believed, in some cases, as much as 30° below, and it should be remembered that in practice it was quite possible to get a very rich gas into the cylinder shortly after a heavy load had been removed. The cylinder was then free of inert exhaust gases and contained nothing but pure air and gas, perhaps almost as rich as town gas. The shock from the resultant explosion, or, rather, detonation and subsequent further compression by the momentum of the moving parts, would be tremendous and, probably, destructive to a fair-sized engine—one having a cylinder of 15″ diameter or upwards. Eight years ago he made an engine with a 10″ cylinder to work with town gas and 120 lbs. compression, but finding that risky, it was reduced to 113 lbs., with the result that actually more power was given at the fly-wheel. In a proposed engine before him the longitudinal tensile stress on the cast iron cylinder barrel was over 2000 pounds per square inch, assuming only 400 lbs. initial pressure, but without any allowance for the thrust of the connecting rod, vibration, casting strains, or temperature effects, and last, but not least, the shock of explosion. How great was the effect of these subsidiary stresses might be seen by the working of the cylinder on most engines of any size doing a fair share of work. In some very recent engines with a cylinder of about 20″ diameter and 120 lbs. compression, the whole cylinder and liner was on the move, pulsating backward

Mr Reginald J. N. Willcox.

and forward and up and down continuously. He had been reassured that this was a proof of the beautiful and scientifically elastic system of compensating the effects of high temperature. From observation it was known that cast iron was really a fairly elastic metal, but when one saw that feature exhibited in a working machine it was surely time to reduce stresses or think of steel. For the above reasons he could not help regarding the engines at the Derby trials as little more than freaks—of great academical interest, but entirely and culpably misleading from a practical point of view. If further fuel economy must be obtained, he thought it would be acquired by the use of liquid or solid fuel under proper conditions, as in the Diesel engine, for instance. The direction at present was only imperilling the somewhat soiled reputation of the gas engine. If not entirely irrelevant to the subject of the paper, he should like to discuss shortly the application of the gas engine and suction producer to marine and other engineering works. Except for driving very heavy or isolated machines (which were exceptional) it was generally agreed that a multiplicity of electric motors was not justifiable, but rather that the line shaft should be subdivided so that a small number of duplicate motors of fair size—40 H.P. or upwards—might be used. Now the small gas engine, say of from 40 to 80 B.H.P. was, as everyone knew, practically as economical of fuel as the largest of units. It could almost be demonstrated on paper that it was not worth stopping a small engine during meal times; and in practice it was generally kept running. In a large new engineering works adopting 80 H.P. units, he believed it would be found that the capital outlay on a gas driven plant with gas generated and supplied from a central plenum producer would certainly not exceed that of a first class steam plant including boiler, chimney, pumps, dynamo, wiring and motors, etc. Its manipulation would cost less, and since the gas engine was very economical to begin with, and delivered its power without the intervening losses

in belt, dynamo, line, and motors, it would, he believed, be found that electricity at ·75d. per unit was much too dear for these factories. It was doubtful whether any small works plant could touch as low as ·75d. with steam. In smaller works where the consumption of energy was not large enough to ensure an electrical supply of power at under ·75d. per unit, the gas producer engine was unquestionably a cheaper source of power. In a large factory employing several units, the space occupied by a number of separate suction producer plants and their coal bins, with the necessary arrangements for supplying the latter with fuel, would be prohibitive, quite apart from capital charges; but where two or three engines only were at work the system appeared to be ideal. He had a pretty intimate knowledge of a very large number of works of all kinds and sizes driven by gas engines, where many had been most successfully driven; many also had been distinct failures. But throughout scores of unsatisfactory gas engines that had come under his notice, he knew of only one principal cause of their troubles. As all knew a steam engine could be constructed to give out its maximum power for an indefinite period. The gas engine would not do this under practical everyday conditions. If a steam engine were overloaded it would slow down—a gas engine must stop. If a gas engine ran for many days at about full power it rapidly lost its efficiency through the effects of overheating and, as a consequence, became overloaded and stopped. If the cooling water contained easily precipitated matter, this trouble, too, was aggravated. Liner joints leaked, valves gave trouble, barrel ends cracked, pistons got hot, (he had seen two red-hot and at work), lubrication failed, piston and liners became worn, and leakage took place, with the result that the power of the engine was further diminished and starting was made difficult. Of quite a number of shipyards and engine works where gas engines were adopted, some as far back as fifteen years ago, many had given them up in disgust, but in each

Mr Reginald J. N. Willcox.
instance it was undoubtedly due to the owners expecting their engines to do what their makers claimed for them, — and, perhaps, a little more. They had, of course, been accustomed to the elastic steam engine. In one very large yard a clean sweep was made in favour of electricity from a central steam plant, and this had again been discarded after two years' work for a municipal supply. He took one of the 80 H.P. engines and, after rebuilding it entirely, but without the renewal of a single part, it ran for five years at about 50 H.P. with the most satisfactory results. Yet it had a dreadful reputation at the shipyard and eventually was sold at scrap iron prices. As the bright side of the medal, it was pleasant to instance a large engineering works which began about sixteen years ago with a Clerk cycle engine to help out the steam plant. This engine consumed 27 cubic feet of town gas per I.H.P. per hour, was most erratic in behaviour, and would occasionally cast a cylinder end through the side of the engine house. As a last resource, and to compel it to start, gangways were erected alongside the belts so that a large squad of men could quickly assemble and pull it around until something happened. There were now, he believed, about 18 engines of all makers, but on the Otto cycle, driving the shafting and generating electricity, but great care was taken that each engine should have a fair reserve of power. Many were little the worse after ten years' service, but they were well looked after. It was a strange fact that some of the worst managed and ill-kept gas engines he knew of were in two of the largest marine engine works in the kingdom, where gas engines were the principal and almost the sole source of power. When it was remembered that a new piston and liner practically renewed a gas engine, and that one built, say, seven years ago, was not far short in economy of one of the most recent design, it would be admitted that the rate of depreciation in a well-built and well-cared for engine was almost nominal On the other hand, if ill-cared for, depreciation was extremely rapid.

He had the utmost faith that the gas engine worked by producer or low-power gas would ultimately be the principal power producer on land, and that it would eventually oust the steam engine and turbine even in the largest generating station. He had it on very good authority that the cost to the town's folk of supplying a unit of electricity generated in some of the largest and most powerful units in the kingdom was ·961d.; and in a smaller town where the outlay on mains was not so disproportionate to other charges, it was ·926d. per unit. In both instances power was supplied for ·75d. per unit, although additional plant had had to be provided for this very purpose. It was difficult to see how this rate could be lowered—although it was done—or how it could even remain as low as it was in face of the rapid obsolescence of large generating plants, so that the day of the gas engine might be nearer than any could dream of.

Mr JOHN BARR (Member) said he had sent the Secretary a short communication on gas pumping plant, which had been erected in the South of England, and the results given there were so extraordinarily good that he communicated with the engineer, and asked him to be kind enough to send detailed figures, which he had done. In looking over these, he found that what the engineer called pump horse power was really brake horse power. The result was that the 0·64 lbs. of fuel was really per B.H.P. per hour; while the consumption per pump H.P. was 0·84 lbs.; but even at that the economy was extraordinarily good, and worked out to something like 264 million foot lbs. per cwt. of fuel used.

Mr CAMPBELL—Does that include any standby loss of the plant?

Mr BARR said he could not tell; the figures were as published.

Correspondence.

Mr JOHN BARR (Member) referring to the results of the test of a suction gas plant and horizontal treble ram pump at

Mr John Barr.
Combe Down Water Works, Bath, observed that the actual power in water lifted, or pump horse power as it was called, was, in this case, nearly 49, and the coal consumption per pump horse power per hour, calculated from the figures given in Table VI., worked out at 1·11 lbs. per pump horse power per hour. While this was a fairly good result for a small pumping plant, he would like to draw attention to a test of a suction gas pumping plant carried out by the Sutton District Water Co. at Woodmansterne Pumping Station, Surrey, as published in the transactions of the Junior Institution of Engineers, London, the test given being an appendix to the presidential address on "Water Supply" by Mr. W. B. Bryan. There were two gas engines in this case, one driving a set of low level pumps, the other a set of high level pumps, the pump horse power in the former was 56·17, and in the latter 82·3, the average cost of raising 1000 gallons 100 feet was given at ·066 of a penny; the coal used per pump horse power per hour was 0·64 lbs., the cost of coal used per pump horse power per hour being ·097 of a penny, with anthracite at 26s. 8d. per ton. The results were so exceedingly economical that he thought members of the Institution would like to have a note of them. The test was a continuous one for 18 hours, and was carried out under the supervision of Mr. W. Vaux Graham, consulting engineer to the Sutton District Water Co. Mr Campbell's paper was an exceedingly interesting and instructive one and he deserved the thanks of the Institution for bringing the subject of Suction Gas Engines and Suction Gas Plant so clearly, and in such a practical fashion before the members.

Mr CAMPBELL, in reply, said that the discussion seemed to him somewhat remarkable for the want of knowledge displayed by some of the speakers. There seemed to be three classes of critics—(1) Those who had criticised in an academic manner and who had only what might be termed a paper knowledge of the subject; (2) Those who from the position

they occupied were biassed in their views and displayed prejudice and want of knowledge in their criticisms; and (3) Those who were seekers after information and were not evidently afraid to ask many questions about details of construction of the engine and gas plants described, and the why and wherefore of them. He did not suppose that he would be able to satisfy all three classes in his reply, although he would do his best to do so. Before commencing a formal reply, he wished to say that the discussion had shown once more the conservative spirit of British engineers. Out of the whole of the speakers in the discussion, only one of them had referred to suction gas in an appreciative manner; the remainder were denunciatory, and the reasons given for the denunciation seemed to him to be reasons which would apply quite equally to any other engineering subject as well as to suction gas plant. Gas engine makers in the past had had nothing to thank other engineers for. As a matter of fact, they had been the strongest opponents of gas engines ever since their inception, and it was not till the year 1900 that gas engineering began to be recognised as a branch of engineering, or that the gas engine was considered worthy of study in a serious manner. There were exceptions, of course, to this rule by several eminent men, but the attitude of the engineering profession in general had been, and was, what he had described. Since 1900 things had changed, but still the non-progressive spirit was being constantly displayed by engineers who, of all persons in the world, ought to be ready to accept and welcome anything which tended to progress in engineering matters. Mr Rowan in his remarks complained somewhat of the limitation of his paper, and said that he had only presented a few types of both gas engines and gas plants, whereas, there were many others which could equally well have been described. This criticism was quite correct, but in writing the paper he had to consider whether it was wise for him to attempt to cover too much ground as that

Mr Campbell.
inevitably meant by being more discursive, and treating on many matters only in a general way and dealing with nothing in particular and in detail. In consequence of this he purposely left a great many things out of the paper, as it was impossible in the time at his disposal in one evening to write a paper which covered the whole of the subject. He might say that after the paper was written, copies of it were handed to several of his assistants, and the unanimous verdict of these gentlemen was that, if read as written the audience should be told in advance that they must bring their suppers with them. After this decision he had no option but to cut out a great deal of the matter he had prepared. Mr Rowan must excuse him for going into the theoretical description of the suction gas plant as set forth by Professor Dalby, as the question required to be dealt with in a much fuller manner than had been put forward by the Professor. A great deal was said by Mr Rowan and other speakers about a so-called "weak point" of the suction plant, viz., its inability to take varying loads; or, to put it another way, its supposed inability to take a heavy load suddenly, after having run for a long period at light load. This point was one about which a great deal had been written, and especially by those who had had no practical knowledge of the suction plant. It was quite true that the temperature of the fire did become reduced when running at light load for a long time, and there was a little difficulty in at once taking full load from no load after the plant had been running on no load for a considerable length of time; but in making such a statement, he wished it to be understood that the running at no load must be for some lengthened period and that the change made must be between no load and full load. Table VII. of the Judges' Report of the Royal Agricultural Society's Trials, which took place in June last at Derby, gave details of the performance of twelve engines with variable load. One of the trials was running the engines for two hours without load, after which they were

called upon to suddenly develop full load. Twelve engines were so tested under these abnormal circumstances, and the average time taken by these engines to enable them to recover their full speed and carry full load was 6¾ minutes. The time for taking the full load varied from half-a-minute to fifteen minutes. It should be noticed in the same Table that, in the other variable load trials, viz., in the change from light load to one-third load no change in the speed of the engines took place, and from half-load to full-load the same satisfactory running was observed. Mr Rowan and others spoke of the difficulty in maintaining an even temperature in the fire with light loads so as to enable this so-called "weak point" to be overcome. References were made by Mr Rowan to certain arrangements for carrying the quantity of air and steam in the suction plant. He should like to say that in the gas plant illustrated in Figs. 1 and 2, means were shown for varying the amount of steam and air taken into the gas producer. As a matter of fact, in the suction plant illustrated, the steam could be entirely cut off and air of an unlimited quantity could be drawn through the generator fire, but although the whole of the suction plants as made by his firm were fitted with such a device, he questioned whether in any single one of them had any use been made of it, for the simple reason, that in practical everyday working no trouble whatever was experienced with suction gas engines running on light or variable load. Power users did not buy engines to be run on light loads for lengthened periods. The practice was for power users to shut their engines down when they saw that they would have nothing for them to do for half-an-hour or an hour and start them up again. As he had said, this so-called "weak point" of the gas plant did not occur in practice. He had a fairly good knowledge of the practical circumstances of everyday working occurring in a great many different branches of trade, and he had never found a suction gas plant properly worked which had failed to take any

Mr Campbell.
varying load which it was or could be called upon to take. He supposed that most engineers would agree that driving wood sawing and cutting machinery was about the most varying load one could have, and his experience of this work proved that the suction plant could satisfactorily do its duty in maintaining regularity of speed and developing full power when called upon to do so. Mr Rowan asked him whether he was a believer in the stratified theory of gases in a gas engine cylinder and, in reply, he might say that he was not and never had been a believer in such, as all theories ought to be based upon practical knowledge. A little had been done in the matter of utilising the waste heat of exhaust gases in gas engines, and he was sure that more would be heard on this point in the future. Mr Rowan was to be congratulated on the list of papers which he had published. He now came to Mr Wilson's criticism. Mr Wilson boldly announced himself as one who felt that the suction plant was a competitor, and, therefore, his remarks had to be read in that light. He did not know that he could give much comfort to Mr Wilson about the extensive use of town gas for motive power purposes, because its price could not be reduced to such a figure as would enable it to compete with a suction plant. To enable this to be done, the price of town gas would require to be reduced to 9d. per 1000 cubic feet. Mr Wilson made play of "many failures" of suction plants. Such statements were not understood by him, and he thought he would be in order if he asked Mr Wilson to give details of them so that members of the Institution might judge for themselves of the so-called failures. He was pleased to say that Mr Wilson could not record any failures of "Campbell" suction plants in the city of Glasgow or elsewhere. He would like to take this opportunity of pointing out the anomalous position which a gas engine user occupied when using town gas, and that could be best illustrated by a statement of fact. Some years ago, in the city of Glasgow, a master printer sued

Mr Campbell.

the Glasgow Corporation for damages, owing to their failure to supply him with sufficient gas to run his engine during ordinary business hours. The master printer lost his case, for as the Sheriff said, the Corporation could only be compelled to supply gas for lighting purposes, and that if they supplied the master printer with gas for motive power it was only of their own good will and pleasure. The story of Mr Wilson about the standby town gas connection used in conjunction with suction plants was a favourite one with gas managers. In a recent number of the "Gas World," one gas manager gave points to his *confrères* as to how to meet the competition with suction gas, and one was to frighten the poor user of the suction plant with stories about the absolute necessity of having a town gas connection, and it would only be by the good pleasure of the Gas Committee or Corporation or Council that he could get such if he wanted it. But if such connections were really necessary, a great number of suction gas installations would never be made, because at least fifty per cent. were fixed where no town gas was available. His own opinion was that a town gas connection was a source of weakness to the user, for if any little hitch occurred through negligence or ignorance the town gas was put on to the engine, whereas, if the attendant knew he had only the one kind to use he would take care to pay attention to matters requiring consideration in their proper order. Mr May was one of the speakers who sought after information, and he desired to know something about the marine gas engine illustrated in the paper. He only mentioned the marine engine at the end of the paper for the purpose of indicating to engineers in general one trend or direction that the gas engine was taking, and he had no idea he should be called upon to answer questions of detail of working and construction in connection with it, for the reason that no one either in this country or abroad was yet able to give a definite opinion regarding the best arrangement of details in a marine gas

Mr Campbell.

engine. He had found in his experience that there was no royal road to success, and to those making marine gas engines experience was the best and surest guide. Mr May stated it was hardly necessary to have a duplicate gas generator for continuous working, and he cited the run of the Thornycroft canal barge which, he said, worked continuously for forty days and travelled 500 miles in a canal. In reply, he did not consider such a statement to be evidence, for, speaking plainly, he did not believe that the Thornycroft barge ran continuously for forty days of 24 hours each without stopping a moment during the whole of that time. There was no gas generator made at present which was capable of performing such a duty without a stop for cleaning, and his belief was that there would be no advantage in it if one were made. Further, if one considered what 500 miles of canal meant he would see at once that a non-stop run of forty days was impossible in this country. What with stoppages in locks, and in consequence of bridges, etc., a non-stop run of the character mentioned was impossible. Again, he believed the Thornycroft barge lost, if not all its propeller blades, at least the greater portion of them in the 500 miles run in the canal, and he thought on that account the non-stop run of forty days and nights was not possible. His experience proved that while a single gas generator might be made to run even for seven days of 24 hours without a stop for clinkering, yet for runs beyond that period a duplicate generator was absolutely necessary, and even if he were asked to guarantee an installation where the plant had to work continuously for seven days he would advocate most strongly that duplicate generators should be supplied. Mr May asked, among other things, what was the usual allowance of grate area per B.H.P. He knew of no usual allowance; it was a matter of trial and error, and had to be found out by experience. The Judges' Report of the R.A.S. Trials, Table XII., gave some information on that point. Mr Robert Watson spoke about his statement that the increased

number of ignitions in the two cycle engine had a detrimental effect on the life of the piston and cylinder to such an extent that, even after six months' work, the cylinder required to be rebored and the piston renewed. In reply to that he might say that there was no doubt about the fact of the renewal of the piston and reboring of the liner after six months' work. That point admitted of no dispute whatever. The cause, too, of the trouble admitted of no dispute, viz., the high temperatures common to the two cycle type of engine. Erosion of the cylinder did take place as Mr Watson mentioned, similar to that occurring in a gun barrel, but, of course, in a lesser degree. He was unable to follow Mr Watson in his description of the Nurnberg engine, illustrated in Fig. 6, for while he said it was constructed on the Otto cycle, yet it had an explosion every revolution like the Clerk cycle engine. Mr Watson either forgot or did not know that the explosions occurred on each side of the piston of the Nurnberg engine every second revolution and, consequently, the beneficial cooling effect of the Otto cycle was obtained. Another remarkable statement made by Mr Watson he was unable to understand, viz., "Gas engine valves worked much better when vertical, for horizontal valves had a tendency to droop, and there was so little weight in the gas that the back rush was not able to bring the valves home true to their seats." He had made, and was now making, many engines with both horizontal and vertical valves, and he had never found one to have the slightest advantage in working over the other, but the unique part of Mr Watson's description was that "there was so little weight in the gas that the back rush was not able to bring the valves home true to their seats." He never knew there was any back rush of gas about any kind of gas engine valve, and the designer who depended upon it or anything like it to bring his valves home true to their seats, no matter whether the valves were horizontal or vertical, would find himself in trouble at once. Mr McLaren criticised the

Mr Campbell.
statement of "20 B.H.P. for a penny," but he made no attempt whatever to deal with the figure set forth in Table III. of the paper where 20 B.H.P. was obtained for one penny at the Broxburn Electricity Works. It would have been more pertinent had Mr McLaren dealt with facts such as recorded in the Table instead of making such biassed statements as he had done. The fact remained true that in many instances 20 B.H.P. could be obtained with suction gas for a penny. Opponents of the system did not openly attack the economy of the suction gas plant; they knew they could not do that as facts were strongly against them, hence they had the tirade of failures, of town gas connections, of the cost of duplicate plants, of the danger of poisoning by the gas, and so forth, as arguments against the adoption of suction gas. Such arguments would be as valid as one, which he could easily employ if he thought it proper to do so, viz., that steam boilers occasionally exploded, and when they did they were frequently destructive to life and property, that steam pipes, valves, and fittings, occasionally burst and caused damage to life and property, and that the heat evolved from boilers and steam pipes sometimes caused fires which led to the destruction of property. He could go on with points of that kind if he so pleased, but it was a poor kind of argument and one he thought unworthy. On that account Mr McLaren and others who had adopted that style must excuse him from replying. With reference to Mr McLaren's remarks about Table I. of the paper and his complaint that no capital costs were given, he referred on page 84 to the capital costs, and had Mr MacLaren been anxious to know them he should have been very pleased to have sent him a copy of his previous paper wherein they were recorded. He might here say that the capital costs of the steam driven and gas driven stations at Guernsey were equal in amount. The point of Mr McLaren's criticism of the Guernsey plants would be taken away if he said that two separate stations existed at Guernsey, one being entirely

steam driven and the other gas driven. They were situated over a mile apart from one another. The steam driven station took the lighting, and the gas driven station the power load. Both were comparatively new stations and each did its own work independently of the other, so that they afforded a fair comparison of the respective merits of steam and gas driving, and although the load factor was higher in the gas driven than in the steam driven station, it could only affect the consumption of fuel which many of his critics, and particularly Mr McLaren, said was not of so much importance. The steam plant was made by one of the best firms in the kingdom, but it was not his duty to give the maker's name. From this description Mr McLaren's criticism regarding the comparative results was done away with. He might say that there was a reason for the somewhat high repair bill in the steam driven station, but it was not due to the breakdown of accumulators as ingeniously hinted at by Mr McLaren, but by a breakdown in the steam plant itself. Mr McLaren made some statements concerning Tables III., IV., and V. that required some explanation on his part. Unable to say anything wrong of Table III., which showed that 20 B.H.P. was secured for a penny, he turned to Table IV. and said "when the same engine was running a little later, it cost 1·6d. for the 20 B.H.P. By using the words, "the same engine running a little later" implied that it was running under the same conditions as in Table III., whereas the footnote clearly showed that it was not. Mr McLaren, not satisfied with this amount of criticism, turned to Table V. and said, "with another engine the cost had gone up to 2·9d. for 20 B.H.P." That also was incorrect, for the Table showed that the working cost was for *three engines*. He thought he might add that Mr McLaren's criticism on these points, to say the very least, was unfair. As to water consumption, upon which Mr McLaren made comments without knowledge, he begged to refer him to the Judges' Report of the R.A.S.E. trials, page

Mr Campbell.
41, where the Judges stated that the water consumption using anthracite was one gallon per B.H.P. per hour, and using coke 1½ gallons per B.H.P. per hour, so that the statement in his paper of 1½ to 2 gallons per B.H.P. was an overestimate instead, as Mr McLaren stated, an underestimate. Mr Lowe observed that although he had said he did not altogether agree with the 20 B.H.P. per penny statement, yet he attempted to justify it. He did not attempt, but proved it in Table III. Again the statement was made that fuel economy was unimportant, which could only be taken for what it was worth, and in his (Mr Lowe's) opinion was not worth much. If the suction plant had not been economical those critics would have been the very first to seize upon the fact, but as it was economical they were compelled to seek some other point of criticism. Mr Lowe said a town gas engine needed cleaning only once in six months, whereas a suction gas engine required cleaning once every month. This statement could easily be left for users to reply to. Mr William Alexander had evidently been puzzled about the cause of back firing, but he had never heard of such an original statement or an excuse or reason for the frequency of back firing as that given by Mr Alexander. In his criticism Mr Alexander said, "One annoying feature of suction plants that had not been mentioned was the frequency of back firing, a name he had heard given to explosions which took place in the mixing chamber. This often occurred when the atmospheric pressure was low. On one occasion while speaking to the manager of an engineering works in Edinburgh where there was a number of Crossley engines worked from a central producing plant, most of the engines were firing away like a battery of cannon. He asked what was wrong with the engines, and was told, nothing, that this always happened when the atmospheric pressure was lower than usual." That was the most original cause he had ever heard of. He would recommend Mr Alexander to call in the makers of the machine, and he felt sure that if they

Mr Campbell.

had a free hand they would soon cure the back firing. Mr Alexander evidently had no opinion about the utilisation of the waste heat from the exhaust gases. He must say that he had a great deal of faith in the future of this source of economy. Mr Turner, whose firm were the makers of the Wilson boiler, was working on the right lines in introducing boilers to utilise the waste heat. The only criticism he had heard upon it was that the steam seemed wet and could not be utilised in driving a steam engine, but even if that fact were true there were a great many processes which required steam that could be used in the process of making gas, and there were many chemical works that required steam which did not require to be particularly dry. The criticism of Mr Royds dealt with the construction of the vertical engine. He might say that gas engine makers did not consider the vertical cylinder with valve chambers to be an intricate casting. They were accustomed to more intricate castings than perhaps steam engine makers were, and with the experience they had gained they were able to make, perhaps, more complicated castings in a satisfactory manner than those who were not accustomed to gas engine making. Mr Royds made some remarks as to why the valves should not be placed on the cylinder end, and he had brought an illustration with him to show the older type of vertical engine which had the valves in the cylinder end. Mr Duncan was a friend of his, and he did not know that he had anything to say regarding his remarks except that he appreciated them, and he was pleased to see that Mr Duncan had stood up in favour of suction gas. Mr Barr referred to the very satisfactory results which had been obtained at the pumping installation in Surrey, and he thought his (Mr Barr's) firm deserved to be congratulated on the results obtained there. The figures which he had given in Table VI. for the Combe Down pumping plant included standby losses, as well as the starting of the plant to work. Mr Napier had asked if there was any hope of the gas engine

Mr Campbell.
being made reversible. Some engineers had been trying to realise that, and he had no doubt it would come sometime or other, but not at present. When a steam engine was reversed, the boiler was behind it, whereas, with a gas engine there was no such source of power behind it. The gas engine had to make its power as it went along, whereas the steam engine had the boiler to give it. It was absolutely necessary, he believed, that a reversible gas engine should be made before marine gas engines would be successful. There was no difficulty about arranging the reversing gear; the question was the power for reversing, and he thought that would have to come from an ample reserve of compressed air to draw upon. With regard to Mr Willcox's remarks, he had to confess that there were a great many of his statements that he did not follow. He was afraid that Mr Willcox had contradicted himself several times. He had said in one part of his remarks that he preferred to have the electricity from a Corporation, and in another part he had said that electricity from a central supply at ¾d. per unit was too dear.

Mr Willcox—It was too dear for an engineering works.

Mr Campbell observed that he must take strong objection to Mr Willcox's remarks about the trials at Derby. He happened to have two gas engines running at Derby, and they were not freaks at all. They were engines similar to those in use before the trials by various customers of his, and there had been a great many made and sent to other customers since; there had not been a single nut altered in them, and they certainly were not freaks. Another remark which Mr Willcox had made, and which he wished to contradict, was that the ignition occurred before the crank got over the centre. Mr Willcox said that he believed it took place at an angle of 30 degrees below the centre, but that was not correct. No gas engine could possibly work under such conditions, and the picture which he drew on the basis of that assumption about broken shafts and vibration was not correct. The gas

engines were made to ignite at the dead centre. Possibly what Mr Willcox was thinking of was that the ignition gear was tripped before the crank reached the centre. That was necessary, but it did not follow that the ignition took place before that. The current might be set in motion, but the actual ignition took place on the centre.

Mr WILLCOX asked if the contact was broken in the cylinder.

Mr CAMPBELL said it was not, and that the tripping took place before that. There must be a certain interval between the tripping and the actual removal of the contact breaker, and it was anything from 20 to 30 degrees of the crank stroke. He supposed that when one said that some of the engines were freaks that was because one had a compression of 200 and a maximum pressure of from 500 to 600 lbs. Personally, he thought that was too high for ordinary working purposes. His own engines which were run at Derby had a compression of 155 lbs., and there was no difficulty whatever in running an engine with producer gas with a compression of 150 or 160 lbs. per square inch. If one had a rich gas, like town gas, having a calorific value of 600 B.Th.U.'s, one had to reduce the compression, but with a low calorific value gas, one could use the higher compression without any anticipation of free ignition. He must confess that there was a great deal of variety in suction plant. That was necessary with a new industry, and he was afraid that some of the makers were actually finding their way out the best way they could. He was a believer in making the generator and scrubber as large as possible. During the last six or seven years, during which he had been making suction plant, he had found that greater satisfaction was given with a larger grate area and a higher generator than with a similar grate area and a short squat scrubber. Mr Willcox mentioned an engine running with an overload, and said that all it could do would be to slow down, whereas, with a gas engine it would stop, but he was afraid that there was a great deal of wrong-

Mr Campbell.
thinking about this question of overload. It was a common thing to get specifications sent by electrical engineers asking for a quotation for an engine of 200 H.P., but it had to generate an overload of 50 per cent., and one had to provide an engine of 300 H.P., whereas, with the steam engine, people had not been accustomed to sell their engines at so much B.H.P., and he was afraid that many steam engineers did not know what B.H.P. was developed in their engines. They were accustomed to I.H.P. and making their engines larger than was necessary, but gas engine makers had been accustomed from the very beginning to adopt B.H.P. in testing their engines. So that if a person who had been accustomed to the use of steam engines came to a gas engine and expected a similar overload, he met with disappointment, unless he stipulated at the beginning that he wanted such an overload, but it had to be remembered that he was getting a larger engine than what the ordinary load would imply.

The PRESIDENT said the members of the Institution were very much indebted to Mr Campbell for his most interesting paper. Gas-producing plant was now well to the front, and he thought it had come to stay. Personally, he knew very little about the subject; but he was always learning, and from the manner in which the subject had been taken up, and the very kindly and careful way in which Mr Campbell had replied to the discussion, he thought it was evident that Mr Campbell was talking about a subject with which he was thoroughly familiar. He heard a member of the Institution narrate some years ago that he was called upon to give evidence in the Court of Session, and one of the opposing Council told him very rudely that he failed to understand what he meant, and their colleague of the Institution replied—"I am not at all astonished at that, as I am talking about a subject with which I am quite familiar: whereas, you are speaking of a matter of which you know nothing." He was afraid that some members of the Institution did not

The President.

know anything about Mr Campbell's subject, but, be that as it may, they were all much obliged to Mr Campbell for his most interesting paper, and also for what he had said in the discussion, which would form a very excellent supplement to the paper. He asked those present to accord Mr Campbell a very hearty vote of thanks.

The vote of thanks was carried by acclamation.

In returning thanks Mr CAMPBELL said it had been a very great pleasure to him to return to Glasgow where he had learned all the engineering that he knew. He sincerely hoped that none would feel aggrieved at the manner in which he had replied to the statements made in the discussion on his paper.

THE STABILITY OF SUBMARINES.

By Mr J. G. JOHNSTONE, B.Sc. (Associate Member).

SEE PLATES IX., X., AND XI.

Read 22nd January, 1907.

THE history of the development of the navigable submarine vessel may be said to date from the invention of that deadly arm of naval warfare, the torpedo. The torpedo itself is a small submarine, but, having only a very limited range of action, it has to be fired from a larger vessel which can come within torpedo range undetected by the enemy. That the submarine of to-day can fulfil this function is demonstrated by the numbers already added to the fleets of the larger naval powers, and by the rate at which larger and faster vessels are being built and projected.

The essential conditions to be fulfilled by a submarine have regard, in the first place, to the safety of the crew, and to the safety with which the vessel can be navigated along any desired course, either under, or on, the surface. In the recent and larger classes, the habitability conditions seem to be all that can be desired, this being one important advantage in having vessels of such a size as are now being built.

The problem of navigation involves the question of the means of propulsion and the question of stability. The former may be considered solved, as nearly all the existing types of submarines are driven when submerged by electrical power, which is stored in batteries within the vessel. The latter question is dependent upon the design of the vessel, and it is therefore a question requiring the most important consideration.

Regarding the stability of the vessels that have been built and tried, it cannot be denied that more than ordinary skill

and care are required in manœuvring any vessel, and in changing its condition or trim, which has frequently to be done. Accidents have happened to several, and in some cases the question of their stability was raised. The unfortunate disaster to the British submarine, No. A8, and the mishap to No. A4, may be cited as instances. These vessels were of the type known as the diving submarine, and the accidents which occurred to them naturally caused a good deal of discussion regarding the stability of vessels of that special type.

All the submarines of the British Navy are of this type. The original five first ordered were of the Holland design, the succeeding vessels being of a similar type, but of a much larger displacement and greater speed. It is the diving type that offers the most interesting study regarding the question of stability, and it is only to this type that reference will be made throughout the paper.

The close secrecy that has been maintained regarding the designs of the later vessels has probably prevented any particular solution of the problem of stability being made public; but a few articles have appeared in the technical journals, in which some general investigations into statical stability have been made. The more important question of the stability of motion has received comparatively little notice, and it is principally with a view to the consideration of this part of the subject that this paper has been prepared.

It has been thought necessary to give a short description of the chief features of a vessel of the diving type, and also to give some results of investigations into the statical stability and the stability of motion of a special case.

Fig. 1 shows the profile of an arrangement suitable for a diving submarine about 128 feet in length, and of 310 tons displacement. The main portion of the hull is cigar-shaped, and the sections are circular. In order to withstand the severe crushing stresses which would be caused by the head of water if the vessel by any mischance dived to a great depth below

the surface, the shell and framing are made strong enough to resist the pressure due to a head of water of about 150 feet. The plating in a vesel of this size is usually about ½ inch thick; but the main strength to resist crushing is afforded by an efficient system of transverse framing and longitudinal girders. All the existing vessels in the British Navy have single screws astern, but it is proposed to adopt twin screws in the projected vessels. The main driving engines are of the multiple-cylinder-gasoline-motor type, and can only be used when the vessel is awash and the hatch is open. The liability of this type of engine to break down, has probably been one of the reasons that have led to the proposed adoption of twin screws for the projected vessels in which the power is much larger. In some of the smaller vessels the main engines are vertical, but a better arrangement, as far as disposition of weight is concerned, is obtained by placing the cylinders horizontally or slightly diagonally. When the vessel is submerged the screw is driven by an electrical motor which is supplied with current from a storage battery situated in the amidship portion of the hull. The B.H.P. of the main engines is about 2½ times that of the motor, and the speeds obtained in the most recent vessels are 12 knots and 8 knots in the awash and submerged conditions respectively. In the awash condition the motor is intended to be used as a dynamo for charging the storage cells.

In order to bring the vessel from the awash condition to the diving condition, water ballast is admitted into tanks under the storage battery. The capacity of the tanks is therefore approximately equal to the amount of reserve buoyancy in the awash condition. For the more delicate operation of bringing the vessel into the proper diving trim, small tanks are fitted at the extreme ends. It is sometimes necessary to make a small adjustment in the buoyancy, and this can be done by filling or emptying a small tank usually placed between the sets of storage cells amidships.

Vessels of the diving type are made to dive by the action

of the horizontal rudders while they have a small reserve of buoyancy which varies in amount from 2 to 3 lbs. per ton of displacement. The fuel tanks have to be arranged so as to trim the vessel the least amount when the fuel is consumed. If the fuel is partly consumed before diving, it is necessary to compensate for the loss in weight by admitting a volume of water, equal to the weight of the consumed fuel, into empty compartments of the fuel tanks, or into separate compensating or adjusting tanks.

The vessel is provided with an air compressing installation, and has reservoirs to store a large reserve air supply at a high pressure. The main use of the compressed air is to eject the torpedoes, but there is plenty of reserve to renew the air in the hold and to empty the ballast and trimming tanks.

The torpedo tube is situated at the bow, and in recent vessels two such tubes are fitted, and these are generally loaded before the vessel dives. Two reserve torpedoes are usually carried in the hold. After the first torpedo in each tube is fired, the volume of water which has entered the empty tube is run into tanks near the tubes; and after the last torpedo is fired the water can be allowed to remain in each tube. In this way the loss in weight is compensated, and no change in the conditions or in the trim of the vessel occurs.

An armoured steel conning tower covers the entrance hatch. Besides having a water-tight scuttle at the top, it is necessary to have a water-tight sliding door at the bottom of the conning tower. This provision is necessary to prevent water from flowing into the hold, in the event of damage to the conning tower. It will be remembered that the foundering of the British submarine No. A1, after collision, could have been prevented had there been a water-tight hatch at the base of the conning tower.

The light steel superstructure which is fitted on the top of the hull, as shown in Fig. 2, is an important feature. It

affords a good platform for the crew while the vessel is being driven in the awash condition, and it adds considerably to the amount of reserve buoyancy. The openings in it can be shut and made water-tight. When the vessel submerges, the water is allowed to flood the superstructure, and when it rises the water is allowed to flow out, and the openings can then be closed to make the structure water-tight.

In Fig. 1 it will be seen that the superstructure is almost entirely out of the water in the awash condition. Some of the earlier vessels had superstructures which were much larger in proportion to their displacement than that shown in the figure, and it was necessary to pump some of the water out of the superstructure in order to empty it.

Fig. 1 also shows a system of fitting the rudders, which are usually placed abaft the screw. The horizontal rudders can make the vessel dive, and can maintain her at any desired depth under the surface while she is moving. The vertical rudders control the motion of the vessel in a horizontal plane. Pressure gauges are fitted for recording the depth reached by the vessel below the surface, clinometers for recording the inclination or trim, and instruments for measuring the reserve of buoyancy.

In the diving condition the vessel has a small amount of reserve buoyancy, and when it is at rest only a small part of the conning tower is visible above the water line. It is possible to steer the vessel in the diving condition with a small part of the conning tower above the surface, so that observations on the points of the course can be made through the conning tower. The periscope and optical tube arrangement enable the course to be made out without any necessity for the vessel coming to the surface.

Having thus briefly described the important features in a submarine of the diving type, the stability can now be considered. It will be necessary, in the first place, to distinguish between the statical stability and the stability of motion.

The term statical stability is used to denote the tendency that a floating body has to return to the original position after it has been inclined by some external force. This tendency is the righting moment or the displacement multiplied by the righting arm G Z. For an ordinary sea-going vessel, it is usual to calculate the value of G Z at definite angles of transverse heel throughout a sufficient range. The results of such a calculation are plotted in a well-known form, giving what is called the statical stability curve for a particular condition. A sea-going vessel requires to have a certain percentage of reserve buoyancy, and a sufficient margin of statical stability in order to resist the forces tending to capsize her, such as those due to wind or waves; but a vessel, when wholly submerged, cannot meet these capsizing forces. A submerged vessel, when being propelled through the water, is under the action of the forces or moments produced by the resistance of the water to the motion. One of the dangers that may cause disaster to a submarine, is that of being deflected to too great an angle from the course to which she is being steered, and this may arise from instability of the aforementioned forces and moments. Therefore the forces and moments of the resistance of the water, as well as those due to the buoyancy of the water, have to be included in the consideration of the stability of motion.

The statical forces and righting moments of stability will be considered first.

STATICAL STABILITY.

The vessel for which the lines are shown in Fig. 2 is about 128 feet long and 13 feet 6 inches in diameter amidships. Fig. 3 gives the following curves that have been calculated for the main hull portion of this vessel:—

Areas of waterplanes.

Displacement.

Height, above lowest part of hull, of the centre of buoyancy.

Height of the transverse metacentre.

Longitudinal metacentric height.

These curves are all plotted in terms of draught. Since the hull is symmetrical about a longitudinal axis and the waterplanes are taken parallel to this axis, the areas of waterplanes curve is symmetrical about a line at the height of the axis. This also gives a character of symmetry to the displacement curve. Referring to the lowest part of the hull as K, the vertical height of the centre of buoyancy is K B, and K B will be equal to the height of the axis when the hull is totally submerged. K M represents the height of the metacentre. The position of the transverse metacentre M for any displacement is constant, since the hull is symmetrical about its axis, and the curve of K M's is therefore a straight line as shown in Fig. 3.

It will be seen that the area of waterplanes curve varies rapidly between the awash and the submerged conditions. This causes a rapid variation in I, the longitudinal moment of inertia of the waterplane, and consequently the longitudinal metacentric height B M varies rapidly between the above conditions. This curve of longitudinal B M's has been plotted in Fig. 3. When the hull is totally submerged the area of the waterplane is zero, and hence B M is zero for any direction of inclination. The transverse and longitudinal metacentre therefore both coincide with B, and the metacentric height G M is G B in the submerged condition. The " moment to trim one degree" in the submerged condition is therefore given by $\frac{W \times BG}{57 \cdot 3^\circ}$ where W is the weight of the vessel. Assuming B G to be only one foot in a vessel of 310 tons displacement, which is the same as that of the vessel in Fig. 2, the moment to trim one degree is $\frac{310}{57 \cdot 3^\circ} = 5 \cdot 4$ foot tons.

This moment is equivalent to that caused by shifting a weight, say 1/13th of a ton (the average weight of a man)

through a distance of about 70 feet. It will thus be seen in this case that small movements of any member of the crew have practically no effect on the trim. The most serious matter likely to affect the trim would be an inflow of even a small amount of water into the hold. The presence of loose water in the hold of a vessel, as is well known, lessens the metacentric height by an amount $\frac{i}{V}$ where i is the moment of inertia of the free surface of the loose water, and V the volume of displacement of the vessel. If the surface were 12 feet broad and 22 feet long, the value of $\frac{i}{V}$ for a vessel of the size under consideration would be 1 foot, so that this area of free surface would be sufficient to make the metacentric height B G dangerously small. This points to the necessity for some provision to be made against the danger of having a large surface of loose water. It is impracticable to subdivide a submarine extensively by complete water-tight bulkheads, but it should be possible to have partial bulkheads at sufficient intervals and carried to a height of two or three feet above the bottom of the hold. Of course this provision would be practically useless in the event of the rush of a large volume of water into the hold; but the probability of the occurrence of minor accidents such as leaks, flow of water through the hatches, etc., is much greater, and the partial subdivision suggested would be sufficient to greatly minimise the danger of excessive change of trim which, as already pointed out, could easily be caused by a small inflow of water. For this same reason the ballast tanks and the fuel tanks are subdivided into separate water-tight compartments.

The awash condition may be defined as the condition of the vessel when all the ballast tanks are empty, but with all the fuel and stores on board. The reserve of buoyancy of the hull portion, including the conning tower, is approximately equal to the volume of the ballast tanks. A superstructure, therefore,

adds to the buoyancy in the awash condition. The superstructure of the vessel shown in Fig. 2 has a capacity of 11 tons, and the main ballast tanks have a capacity of 26 tons, so that in the awash condition the vessel has a total reserve buoyancy of about 37 tons, which is about 12 per cent. of the "totally submerged" displacement, or 14·6 per cent. of the displacement in the awash condition.

In the diving condition the vessel has only a comparatively small amount of reserve buoyancy, which has to be adjusted carefully by the small buoyancy adjusting tank. In bringing the vessel to her proper diving trim water is admitted into the forward or into the after trimming tank, according to the direction of trim required, and at the same time the buoyancy has to be adjusted in the midships tank.

It has been calculated that this vessel's centre of gravity is about 1·2 feet below the centre of buoyancy in the diving condition. The effect of emptying the ballast tanks is to raise G a distance of ·22 feet, and to lower B a distance of ·48 feet, thus reducing the distance B to G from 1·2 feet in the diving condition to ·5 feet in the awash condition. In this condition the water line is W L in Fig. 2, and the vessel is trimmed approximately 1 degree by the stern, as it is advisable to have this amount of trim by the stern when the vessel is being propelled in the above condition.

The values of G M, transversely, and longitudinally, corresponding to any given condition of the vessel can be found from the curves in Fig. 3. For the awash condition the transverse G M is ·97 feet, and the longitudinal G M is 31·3 feet. Thus the moment to trim one degree in the awash condition is $\frac{284 \times 31{\cdot}3}{57{\cdot}3} = 156$ foot tons.

It may be of interest to consider the following different conditions:—

1. Awash.
2. Awash, but with the forward fuel tank empty.

3. Awash, but with the after fuel tank empty.
4. Awash, but with all the fuel tanks empty.

The water-lines corresponding to these four conditions are drawn in Fig. 2, and are W L, $W_1 L_1$, $W_2 L_2$, and $W_3 L_3$ respectively.

The following table gives the results of the trim calculations for each condition:—

Condition.	Water-line.	Displacement.	Moment to Trim 1°	Height of G (KG).	Height of B G.	Transverse G M.	Longitudinal. G M.
		Tons.	Ft. Tons.	Feet.	Feet.	Feet.	Feet.
1	W L	284	156	5·78	·5	·97	31·3
2	$W_1 L_1$	276	206	5·87	·26	·88	42·9
3	$W_2 L_2$	277	204	5·84	·31	·91	42·3
4	$W_3 L_3$	269	260	5·91	·09	·84	55·1
Submerged		310	6·5	5·55	1·21	1·21	1·21

The forward trimming tank and the after trimming tank each have a capacity of 1 ton. If one of the tanks be completely filled, the change of trim that would be caused in the diving condition would be about 9 degrees.

With regard to statical stability, it will be seen that for the main portion of the hull the curve of G Z's is a curve of sines, since the position of the transverse metacentre is constant for all inclinations. The equation to the curve of G Z's is G M Sin θ.

The statical stability curves have been drawn for the submerged condition, and for the conditions Nos. 1 and 3, and are given in Fig. 4.

Curve 1 is for the vessel entirely submerged.
,, 2 is for the vessel in the awash condition.
,, 3 is for the vessel awash, but with the fuel tanks empty.

It will be noticed that there is not much difference between these curves. For the two conditions when the vessel is awash, the effects of the buoyant superstructure and the conning tower have been calculated in each case.

The increase in G Z, which begins to take place at the angle when the superstructure begins to submerge, is shown by the dotted curve. The maximum increase is, at the angle of inclination, 90 degrees.

STABILITY OF MOTION.

From the preceding remarks it will be seen that it is necessary, in the consideration of the stability of motion, to take into account the forces and the moments produced by the resistance of the water to the motion of the body.

The principle that determines the stability of motion may be stated as follows:—

If a body moving through a resisting medium, such as air or water, receives a small disturbance causing it to turn about its centre of gravity, the motion will be stable or unstable, according to the direction of the resultant moment of the resisting forces. If the resultant moment tends to bring the body back to its original direction of motion, then the motion is stable.

As an example of a body which has great stability of motion, the case of an arrow might be cited. The flight of an arrow is stable or steady when it is moving with its head first and its shaft in the line of motion. In order to illustrate this principle, consider, for the sake of simplicity, a vessel symmetrical about the axis of its motion, being propelled through water at a uniform speed. Suppose this vessel to receive a

small angular displacement θ from its line of motion. There will then be a normal reaction r which will depend upon the speed of the vessel or upon its momentum.

Fig. 5 represents this vessel and the forces acting on it after it has been deflected to an angle θ from the original line of motion. The centre of buoyancy B will lie on the axis. Let G be coincident with B, so that there is no statical righting couple, and let the weight of the vessel be equal to its displacement. The total resultant of the resistance of the water will act in some line inclined to the axis. Let r and R be the components of this resultant, perpendicular and parallel to the axis of the vessel respectively. The normal reaction r will act at some point m in the axis, and R will act along the axis. R may be considered to balance the thrust T, so that the vessel is under the action of a force r acting at its C G perpendicular to the axis, and a couple $r.Bm$. The direction of this couple will depend upon the axial position of m relatively to B. The direction may be called positive if the couple tends to turn the vessel back to its original direction of motion; and this will be so if m is aft of B. Therefore the motion will be stable or unstable, according as m is abaft or forward of B. If m coincides with B, there will be no turning effect. It will be seen that m is a point somewhat analogous to the metacentre M, the vertical position of which in relation to G determines the initial statical stability of a floating body.

The features in the construction of an arrow give that body great stability of motion during flight. The centre of gravity G is near the head, which is the heaviest part, and the point m is near the tail, which is made light, and feathered so as to offer a resistance at that end should the shaft be deflected slightly from the path of motion. The longer the shaft is made, the greater is the stability of motion.

In the question of stability of motion of submarines, the horizontal rudders need only be considered. The danger from instability of motion may result in the vessel diving too deep,

and this can only be prevented by the horizontal rudders. The effect of the rudders will be considered later, but in connection with the case under consideration if the motion of the vessel is stable no steering would be necessary, except to counteract the moments due to a possible variation in the external conditions from causes such as tidal currents, etc. If the motion is unstable, the rudders would have to be constantly steering to counteract the tendency of the moment $r.Bm$. As may be imagined, this latter condition would be undesirable in a submarine; at any instant the rudder might not have the full amount of counteracting effect necessary to check the tendency of the moment turning her away from the course. The vessel's path in such a case would be undulating in character; the steersman would have to be constantly on the alert, and in this respect he would resemble a juggler in the performance of a balancing feat.

When G is below B, as shown in Fig. 5, and the vessel is inclined to a small angle θ from the original line of motion, there is a statical righting couple W.B G Sin θ where W is the weight of the vessel, or of the total displacement. The forces acting on the vessel are:—T, the thrust of the screw (which in this case is axial); R, the axial component of the resistance of the water; r, the normal reaction of the water; W, the weight of the vessel acting downwards at G; and W, the resultant buoyancy acting upwards at B. As shown in the figure, the moments of these forces about G are T.B G, R.B G, $r.Bm$, O and W.B G Sin θ respectively. The motion will be stable if the algebraic sum of these moments is positive, *i.e.*, if the resultant moment tends to turn the vessel so that θ becomes less.

The condition may therefore be expressed

$$\text{W.B G Sin } \theta + r.Bm \text{ must be } > 0,$$

$$\text{or } Bm \text{ must be } > -\frac{\text{W.B G Sin } \theta}{r}.$$

Therefore the motion will be stable or unstable, according as

$$Bm \text{ is } > \text{ or } < -\frac{W.B\,G \text{ Sin } \theta}{r}.$$

In the limit as θ is taken smaller and smaller both W.B G. Sin θ and r become zero, so that the limit to the expression $\frac{W.\,B\,G \text{ Sin } \theta}{r}$ is indefinite. If we assume r to vary as Sin θ and some power of the speed the limit to the above expression when $\theta = 0$ is $\frac{W.B\,G}{kv^n}$ where k is some constant, and n the power of the speed v, according to which r varies.

For a fixed speed, therefore, the motion will be stable if m is abaft the point given by $B\,m = -W.B\,G \times$ (constant). This constant depends upon the speed, so that if the position of m is considered to be fixed and is forward of B, the motion will be unstable if the speed be above that given by equating the above expression to B m.

$$-Bm = -\frac{W.B\,G}{kv^n}.$$

$$\therefore v = \left(\frac{W.B\,G}{k\,Bm}\right)^{\frac{1}{n}}$$

From the figures of a later example in the paper, the value of k is $\frac{1}{18}$, on the assumption that $n = 2$.

Therefore, if m is 4 feet forward of B, the limiting speed for a vessel of 310 tons displacement having a value of $B\,G = 1$ foot is given by

$$V = \sqrt{\frac{310 \times 18}{4}} = 37{\cdot}3 \text{ feet/sec.}$$

$$= 22 \text{ knots.}$$

It has been already mentioned that a submarine of the diving type is made to dive by the action of the horizontal rudders while she has a small percentage of reserve buoyancy.

Let Δ be the total submerged displacement, so that $\Delta - W$ represents the amount of reserve buoyancy. The effect of this force $(\Delta - W)$ tends to bring the vessel to the surface, and in order to maintain a horizontal course the vessel has to be propelled forward at a slight declination by the head. Suppose the vessel to be moving steadily along a horizontal course at an angle of declination θ, and that the rudders are set downwards to an angle α, measured from the axial plane. As before, let R and r be the components of the resistance of the water, Fig. 6.

Let F be the reaction of the water on the rudders, and let d be the distance of the centre of reaction H from the centre of gravity G. The forces and moments are balanced. Therefore the following equations must be true:—

$$\Delta.BG.\ \text{Sin}\ \theta + R.BG - T.BG + r.BM - F.d\ \text{Cos}\ \alpha = 0 \quad \text{- (i.)}$$
$$T - R - (\Delta - W)\ \text{Sin}\ \theta - F\ \text{Sin}\ \alpha = 0 \quad \text{- (ii.)}$$
$$(\Delta - W)\ \text{Cos}\ \theta + F\ \text{Cos}\ \alpha - r = 0 \quad \text{- (iii.)}$$

From these three equations may be found the conditions that have to be satisfied in order that steady motion along the horizontal course might obtain.

Treating B m, R, and r as unknown quantities, then—

$$Bm = \frac{F.d.\ \text{Cos}\ \alpha + BG\ (F\ \text{Sin}\ \alpha - W\ \text{Sin}\ \theta)}{(\Delta - W)\ \text{Cos}\ \theta + F\ \text{Cos}\ \alpha}$$
$$R = T - (\Delta - W)\ \text{Sin}\ \theta - F\ \text{Sin}\ \alpha$$
$$r = (\Delta - W)\ \text{Cos}\ \theta + F\ \text{Cos}\ \alpha$$

When the rudder is set downwards to an angle equal to θ, F becomes zero, and, if the vessel moves steadily with the rudders at this angle, the above equations become—

$$\Delta.BG\ \text{Sin}\ \theta + R.BG - T.BG + r.Bm = 0$$
$$T - R - (\Delta - W)\ \text{Sin}\ \theta = 0$$
$$(\Delta - W)\ \text{Cos}\ \theta - r = 0$$

Eliminating R and r, then

$$Bm = -\frac{W.BG \sin \theta}{(\Delta - W) \cos \theta}$$

which is practically the same condition as the previous one, since $(\Delta - W) \cos \theta = r$.

Therefore the motion of the vessel is stable or unstable, according as m is abaft or forward of the point given by the above expression.

If m be abaft this point, there will be a positive turning moment on the vessel equal to $r.x$ where x is the distance of m from the point, $-\frac{W.BG \sin \theta}{(\Delta - W) \cos \theta}$. This moment $r.x$ has to be counterbalanced by the rudder, which must be turned through an angle α greater than θ.

If the moment $r.x$ be negative, *i.e.*, if m is forward a distance x from the point given by $-\frac{W.B\,G \sin \theta}{(\Delta - W) \cos \theta}$, then $r.x$ may be counterbalanced by setting the rudder to some angle upwards from its position at the angle θ. When the rudder is deflected it is necessary to take into account the reaction F, as well as the turning moment produced by this reaction. It may quite easily happen that the moments are balanced, say, when the vessel is inclined θ, and when the rudder is deflected to an angle α, and that at the same time the vertical components of the forces are not balanced. In this case the vessel will tend to follow a course which will be inclined to the horizontal, and this case the equations (i.), (ii.), and (iii.), must be altered by taking account of the angle of inclination of the path of the vessel to the horizontal.

When it is desired to proceed along a horizontal course, and the moments and forces cannot be simultaneously balanced, the rudder has to be deflected so as to produce the two effects alternately. If the vessel tends to rise, the rudders can be deflected downwards, which will have the effect of turning the

vessel downwards. The inclination must be greater than the angle θ that would balance the moments, before the vessel will move downwards. This inclination will gradually increase if the rudders are deflected far enough from the centre line to cause a negative resultant turning moment, and when the vessel has dived to the required depth, the angle of the rudder can then be decreased, and she will gradually rise as before. This state of affairs is likely to happen when the reserve buoyancy is too great in comparison with the other forces. It will be obvious that in order to have steady motion along a horizontal course, there must be some suitable relation between the area of the rudder, the reserve buoyancy, and the angle of inclination of the vessel. In order to show how this question can be investigated, the following particular case has been chosen:—

Suppose a submarine vessel of 310 tons displacement, symmetrical about its axis to move steadily forward at a speed of 8 knots along a horizontal course while it is declined to an angle of 3 degrees. The horizontal rudders have an area of 20 square feet, and are set downwards to an angle of 12 degrees. The distance of the centre of reaction of the rudders from G is 75 feet. The B G of this vessel is 1·2 feet, and the thrust of the screw is 3 tons. The amount of reserve buoyancy is ·25 tons. The problem is to find the forces r and R, and the position of the point m.

Assuming the formula to be true for the normal reaction of the water on the rudders, viz.—

$$F = 1{\cdot}12 \times A v^2 \sin(\alpha - \theta),$$

then

$$F = (1{\cdot}12 \times 20 \times 180 \times {\cdot}1564) \text{ lbs.} = {\cdot}282 \text{ tons},$$

$$\therefore Bm = \frac{{\cdot}282 \times 75 \times {\cdot}978 + 1{\cdot}2\ ({\cdot}282 \times {\cdot}208 - 310 \times {\cdot}0523)}{{\cdot}25 \times {\cdot}998 + {\cdot}282 \times {\cdot}978.}$$

$$= 2{\cdot}1 \text{ feet, and } m \text{ is aft of B.}$$

Also R = 2·93 tons.

and r = ·526 tons (from equations i., ii., and iii.)

If m be at any other point in the axis, then, in order to maintain the conditions for steadiness of motion, keeping the same angle of inclination of 3 degrees, the rudder must be set to a new angle, and the buoyancy must be adjusted to balance the change in the vertical component of F.

It would require m to be 37·8 feet forward of B in order that the rudder should not be steering, and, further, the reserve buoyancy would have to be ·525 tons approximately. On the supposition that the position of m can be made to vary, the values of a and $(\Delta - W)$ that would fulfil the conditions as expressed in equations (i.), (ii.), and (iii.) can be obtained.

Curves showing how these values vary are given in Fig. 7. The abscissae measure the distances Bm. If the vessel be trimmed in the diving condition so as to bring the longitudinal position of G forward of B the statical righting moment will then be W.B G Sin $(\theta - \delta)$ where δ is the angle of inclination of the axis when the vessel is at rest, and θ the angle of inclination when the vessel is in motion. The admission of about ·32 tons of water into the forward trimming tank would cause the vessel to trim about 3 degrees by the head from a horizontal position, and in this case θ would be equal to δ. If the vessel moves steadily along a horizontal course at this angle, equation (i.) becomes $R.BG - T.BG + r.Bm - F.d \text{ Cos } a = 0$, and therefore

$$Bm = \frac{F.d \text{ Cos } a + BG (F \text{ Sin } a + \overline{\Delta - W} \text{ Sin } \theta)}{(\Delta - W) \text{ Cos } \theta + F \text{ Cos } a}$$

It is possible from this equation to determine a suitable value for θ that would give the conditions of steadiness of motion, but in order to do so the values of r and R and the position of m would require to be known for any angle of inclination of the vessel to the horizontal. There is obviously a great range of variation in the choice of area of rudder, reserve of buoyancy, and angle of inclination. The position of m is dependent upon the shape of the exterior of the vessel, but its position

could be altered considerably by fitting horizontal planes or fins on the vessel. The effect of fitting planes similar to those shown near the horizontal rudders in Fig. 1 would be to bring the point m aft, and the stability of motion would therefore be increased.

It is suggested that the question of the best compromise that should be made between all these variables, is one that can be determined by experiments with models in a tank. An experimental investigation would give a knowledge of the forces r and R, and the turning moment $r.Bm$, and these would have to be determined for different angles of inclination of the vessel. The other forces and moments affecting the stability of motion could then be considered in the manner indicated. The investigation of these points may be extended to the consideration of the vessel while being propelled in the awash condition. The disaster to No. A8 happened while that vessel was in the awash condition and in the process of trimming. It is obvious that such features in the design as the conning tower and the superstructure, influence the position of m, and in this connection the height of the conning tower would be a more important factor than its diameter.

As it is desirable for other reasons to have a high conning tower, this should be a feature of some importance in the design. The point m will also be further aft in vessels which are flat and broad aft in comparison with vessels which are opposite to this in shape aft. The projected vessels which are to have twin screws must of necessity have a flat shape of hull aft, and are therefore likely to have greater stability of motion than vessels fitted with a single screw. Many other questions affect the design of a submarine, but it will be recognised that the first conditions to be fulfilled are those relating to the stability.

The safety of a submarine, like the safety of an ordinary sea-going vessel, can be expressed by the margin of stability that she possesses in her worst condition. The question of what

margin should be allowed is one that can only be determined by experience, and hence the great necessity exists for close investigation into the stability of existing vessels. The investigation of cases in which mishaps arising from causes due to instability have occurred should lead to a determination of the proper safe margin. The behaviour of any submarine can only be properly noted by the navigators, and it is to them that designers must look for the experience that enables the features of safety to be carried out in new designs. As the speed of future types is to be made greater, the more important becomes the necessity for proper investigation into the question of stability, and it is urged by the writer that tank experiments would be of great value, as it would be otherwise impossible to completely investigate beforehand the stability of any projected type in which some important change desirable in other respects than that of the stability is intended to be made.

Discussion.

Mr PERCY A. HILLHOUSE, B.Sc. (Member), said that if he might be allowed to bring an Irish bull into a meeting of Scotch engineers and shipbuilders, he would say that in the interesting under-water excursion to which Mr Johnstone had treated them, he had taken care to tread upon very safe ground, and had not raised many points of a controversial nature. He had set before them very clearly the conditions attending the safety, both static and kinetic, of submarine vessels, and it was interesting to be reminded that, although these vessels were undoubtedly subject to many special dangers, there were also some from which they alone were free, namely, dangers arising from the actions of wind and waves. Mr Johnstone had shown that the stability of motion of a submerged vessel would be quite satisfactory up to a speed of 22 knots; all that now remained, therefore for the designers of submarines was the task of evolving a vessel capable of attaining such an under-water speed, though it did not seem likely that this would be

Mr Percy A. Hillhouse. B.Sc.
done for some time to come. In speaking of the liability of the gasoline motor to break down, Mr Johnstone said that that was one of the reasons which had led to the proposed adoption of two sets of such engines and twin screws, but he would have thought that the liability of any type of engine to break down would have been good reason for having fewer engines of that type instead of more, and would have indicated the advisability of adopting some other kind of engine if possible. Mr Johnstone had also stated the speeds awash and submerged to be 12 and 8 knots respectively. Taking the horse power as being proportional to the cubes of those speeds, then th power, when awash, should be about $3\frac{1}{2}$ times the power when submerged, and it was surprising to find that it was only $2\frac{1}{2}$ times as great, as the vessel when awash had to encounter considerable wave-making resistance which the submerged vessel would avoid. He would like to ask Mr Johnstone if there was any surface disturbance visible over a moving submarine, and also if the power developed by the main engine in the awash condition was used partly for propulsion and partly to drive the dynamos for charging the storage cells. Mr Johnstone had mentioned instruments for measuring the reserve of buoyancy, and as it seemed to him to be a very difficult thing to measure, he would be glad if Mr Johnstone would explain the principle upon which such an instrument worked. If it were merely a gauge to show the amount of empty space remaining in the ballast tanks, the zero mark would have to be adjustable to suit the variation of the weights on board other than water ballast. He was not satisfied that Mr Johnstone had adopted the best method of treating the problem of the effect of loose water upon the stability of a submerged vessel. In comparing the problem of the effect of loose water in a merchant vessel, with that of loose water in a submarine, there was one difference that was apt to be overlooked, namely, that while free water could be added to the load of a merchant vessel by sinking her a little deeper, this could not be done in the case of a vessel

already completely submerged. In the merchant vessel the reduction in the height of the metacentre was proportional to the moment of inertia of the surface of the loose water, but one had also to take into account the alteration in the height of the common centre of gravity. But in the case of a submarine the displacement could not be increased, so that if loose water were added anywhere some other weight would have to be removed. The problem might therefore be regarded as that of removing a fixed weight from one part of the vessel, and replacing it by an equal weight of loose water in some other position, the position of the metacentre remaining unaltered. The effect upon the stability depended entirely upon the relative heights of the original and final positions of the shifted weight. If the loose water were supposed to be in contact with the circular-sectioned interior surface of the vessel, the virtual point of application of its weight would be at its metacentre, that was, at the axis of the vessel. If, then, for example, the weight removed were that of a torpedo discharged from some position above the axis, and the loss of weight were compensated for by loose water in the vessel's bottom, an increase of metacentric height would result. This was only one way in which the problem of the effect of loose water might arise, but in the case of a wholly submerged vessel it appeared to be better to attend to the G end and not to the M end of the metacentric interval. Lastly, in treating of the effect of the conning tower upon the stability of motion of the submarine, Mr Johnstone stated that the conning tower increased the stability of motion by raising the centre of resistance, and hence bringing the point of intersection of the line of action of the resistance with the axis further aft. If the axis were inclined downwards, he agreed with Mr Johnstone that the conning tower would tend to stability, but if the vessel were rising, and the axis inclined upward, the conning tower, by raising the line of action of the water would draw the point of intersection forward, and so tend to instability of motion.

Lieut. M. Heggstad.

Lieut. M. HEGGSTAD (Royal Norwegian Navy) thought he was unable to find any point in Mr Johnstone's paper that could be further enlightened by him as far as theory was concerned. The comparison with a flying arrow was quite illustrative, but, unfortunately, the diving boat was not an arrow, which was proved by many of the terrible accidents which had happened to vessels of this type. The submerged diving boat was subjected to many variable forces and couples, some of which were now known to them after having read Mr Johnstone's paper, but those were not all. It could easily be shown by the stream-line theory, that the boats of the diving type under certain conditions must be subjected to forces—not mentioned in Mr Johnstone's paper—which tried to capsize the boat. It could also be shown that these forces were greatest when the boat was near the surface or near the bottom, and least when the boat was half-way between the surface and the bottom. The heavy "bow wave," sometimes called "statical wave," seemed to prove this theory. To keep the diving boat steady, the couples due to the thrust of the propeller, the weight of the boat, the buoyancy, the resistance, and the stream-line motion must be nullified by the rudder; and all the variations in depth, in speed, in angle of inclination, in change of weights—including liquid motion in the tanks due to wave disturbances—and he might also mention change in speed of a passing current, and change in the density of water, must be met with at *once* by the helmsman. If not, the couples in a few seconds might accumulate to a dangerous amount (compare submarines A4 and A8), so much so, that if the human being at the wheel was not quick enough to put the right "sign" on the rudder, an accident might occur before there was time to think. To study these matters was very interesting indeed, from a scientific point of view. To balance a diving boat—he preferred to use the word "balance" instead of "to steer" in this case—there must be a clever man at the

wheel, who must feel what the boat in the next moment was going to do, or in other words, catch her by means of the rudder aft before the tendency to rise or dip with her bow had become too great. In times of war, brain excitement would probably add to the difficulties of keeping the boat steady, and if the balancing forces then brought her to the surface, hostile destroyers might try to capture her, or the guns of the enemy be directed against her. If the minus couples predominated, there was the danger of sticking at the bottom, or reaching such a depth that the hull could not stand the water pressure. This unfortunate position might shortly be described as being "between the devil and the deep sea,"—a position that was commonly not very interesting. His opinion was that the best way to get a *safe* and *efficient* submarine boat was to introduce symmetry in her motion through the water. Water did not like unsymmetrical things; it did not like a body moving at an angle to its stream-lines. In that case water always tried to do what they would not have it do. That was, he thought, the experience of every sailor. Why not, then, let the submarine sink and run submerged on an even keel? Then a great many troubles would be swept away, and many interesting parts on board, too. This method of submerging was first adopted by Simon Lake, of the United States, in his submarine boats, and also later in the long submersibles of the French Navy. Instead of using one horizontal rudder aft, he used horizontal side-rudders or "hydroplanes." His system was very simple, and probably many were quite familiar with it. The four "hydroplanes" were placed symmetrically about the upward force of reserve buoyancy, two planes on each side, and were so connected that they could be operated from the same wheel within the conning tower. By turning this wheel all the planes had the same motion, and therefore the same inclination to the stream lines when the boat was under way. If the downward forces on these planes were greater than the reserve buoyancy, then the vessel would sink until she had reached the depth

wanted. To keep her steady in that position had proved to be so simple, that everybody familiar with a common ship rudder could do it the very first time. To rise to the surface, rudders had only to be turned for "up" and the forces on the rudders, now acting upwards, together with the reserve buoyancy brought her quickly to the surface. All these motions took place on an even keel, without affecting the longitudinal stability. The advantages gained by this method of submerging, both in a safer navigation and in greater efficiency, were so striking, that he did not think he need mention them. The form of diving boats was more or less fish-shaped, with circular sections and small erections. Circular sections were undoubtedly the strongest, but the submarine could be built strong enough to stand a water pressure at a depth of, say, 150 feet, by using elliptical sections too, and the advantages would be many. A good and safe statical stability was more easily obtained, and that, in connection with a greater reserve buoyancy than that commonly used in the diving boat, was, in his opinion, the best way to get rid of such nerve-shocking submarine disasters as had happened. The storage batteries and the ballast tanks could be properly placed low down in the boat, and by using erections forming a flush deck from stem to stern the C B could easily be raised, and at the same time a much safer B M in the awash conditions obtained, the moment of inertia of the waterplane being nearly constant. Some naval architects said that the side rudders would materially affect the speed; that might be—he had not made any experiments on that point—but he should think not. To run submerged, maintaining a small amount of reserve buoyancy, the upward tendency had to be counteracted by a force which always must be taken from the propelling machinery. Whether the downward force was obtained by inclining the *boat* in relation to her course or from the water acting upon "hydroplanes" would be practically the same. A calculation would approximately prove that. If there were any difference it

would be very small, and the loss in speed, if any, by the use of "hydroplanes" would mean a tenfold gain in safety and efficiency. He thanked Mr Johnstone for his able paper, and hoped that it might be followed by others. If the submarine boat was to be considered as a vessel of the future with high speed, he thought Mr Johnstone would easily find out and prove the impossibility of the diving type.

Mr J. R. JACK (Member) said he felt much interested in Mr Johnstone's paper, having had occasion some time ago to go into the question of submarine designs. Judging from the particulars the Author had given of existing vessels, it was not to be wondered at that they were not altogether satisfactory. The use of the single screw for propelling must produce a transverse inclination of the hull owing to the reaction of the propelling machinery, and he had no doubt that transverse inclination would be accompanied by disturbances in other planes of motion. The adoption of twin screws would correct that, and if the outboard shafting were carried in built out bosses, as was now almost universal in twin screw turbine vessels, the effect of such bosses would be to bring the point of application of the vertical component of the water's resistance considerably further aft, thus greatly improving the stability of motion of the vessel. The only point on which he would differ from Mr Johnstone was in his accusation of liability to break down of the petrol motor. He admitted that the electric ignition had not in the past been all that might have been desired, but mechanically considered the petrol engine was one of the most reliable constructions in existence, and with the recent improvements in ignition apparatus, he considered it quite as trustworthy as the steam engine. The horizontal disposition of the cylinders proposed was a distinct improvement, and if that was not practicable from the breadth of the vessel, a diagonal engine might be used with all the cylinders on one side of the shaft. The V type of engine was not to be recommended, as it frequently gave

Mr J. R. Jack.
trouble from excessive lubrication of the cylinders on one side of the shaft and defective lubrication on the other. As submarines could not have too much stability, every effort should be made to get the centre of gravity as low as possible. As the storage battery was of enormous weight, it should be placed right in the bottom of the vessel, and he would prefer water ballast admitted to tanks, say, in the wings of the vessel, rather than under the storage battery. He was certainly surprised to note that the loss of weight due to consumption of fuel was compensated for by admitting an equal weight of water into an empty compartment of the fuel tanks. If that were really done in practice, it at once explained any difficulty with the engines that might have occurred. A single drop of water getting admission to the carburetter would sink through the petrol and find its way to the seat of the needle-valve where it would remain, effectively checking the flow of petrol and acting as a highly efficient stop valve. That sometimes occurred in motor launches, where there was always a considerable amount of water about, and on land motors it might easily happen through injudicious use of the hose in washing down, and anyone who had once had experience of the annoyance caused by water in the petrol would be extremely careful to avoid it in the future. The circular section adopted for submarine vessels did not seem to be the best possible, while it undoubtedly gave the maximum strength, the thickness of plating mentioned in the paper, viz., $\frac{1}{2}$ an inch, would be quite capable of supporting the pressure due to a head of water of about 150 feet, even if the plate were perfectly flat, provided the frames were not spaced more than 21 inches apart, which was sufficient to enable the cells to be stowed between the floors. The best form for static stability would involve a section similar to that adopted for the bulb fin type of racing yacht, as the centre of buoyancy would then be high, and the batteries concentrated in the keel would give a low centre of gravity and great stability. That section, however, was impracticable,

as the fore and aft component of the resistance which the water offered to the advance of the vessel would be in a position which could not be pre-determined, and which would probably vary with the speed of the vessel. A compromise might be arrived at, and he thought that the elliptical section with the major axis vertical would give the best all-round results. He had gone carefully over Mr Johnstone's investigations, and while he had to make certain assumptions in order to get solutions of his equations, he thought his assumptions had been made with great discretion, and the values taken seemed in all cases very reasonable. The results showed very clearly that there was considerable latitude in the areas of the rudders and the corresponding angles at which they would have to be set. It appeared to him, however, that even if the motion were generally stable the vessel would tend to oscillate vertically about a mean position of equilibrium, just as an ordinary vessel rolled from side to side till her motion was extinguished by resistance of the water. In the design he had considered, horizontal rudders were fitted forward and aft at the sides of the vessel, these being partially but not completely balanced. They had to be maintained in a horizontal plane by electric motors controlled by gyrostats. By switching off the current these rudders would be free to take up a position parallel to the stream lines, so that they would not interfere with any desired evolutions either of diving or rising, but when the desired depth had been obtained, the current being switched on, the rudders would become horizontal and would offer resistance to any departure from a horizontal course. The scheme looked well on paper, but whether it would have worked in practice, or would be one of those ideas which when tried demonstrated that the true theory of the problem had not been correctly grasped, he did not know. The conclusion of Mr Johnstone's paper, viz., that the results wanted were best determined by experiments on models in a tank was one in which he heartily concurred; but

that tank must be one free from trammels of commercial considerations, as neither the Admiralty nor private owners of tanks had time to devote to the investigation of first principles, and the submarine was only one of many interesting and important problems awaiting experimental solution.

Correspondence.

Commander FRANK BRANDT, R.N., stated that there were one or two errors of fact in Mr Johnstone's paper. The confidential nature of the work he was engaged in debarred him from saying very much, but he thought he was at liberty to state that the boats were not so tricky as figures would lead one to expect. This he attributed to the fact that their movements were sluggish, and could generally be pretty easily checked before the movement or swing had risen to any dangerous extent; of course it required careful watching. Mr. Johnstone might very well go into the curious effects of what submarine navigators called "pumping," that was, the sudden dropping of a boat to a considerable depth while stationary and with positive buoyancy, of course one knew it was merely the momentum downwards due to rising on the crest of a wave, and then the crest going away from under the boat. The results were occasionally rather surprising.

Mr JOHNSTONE, in reply, said that he had hoped for more criticism on his paper from some of those who had had experience in the navigation of submarines. It was probable that those who had experience of this sort, felt that they were bound to maintain a silence which barred them from indulging in any effective criticism. At the present time a policy of secrecy seemed to be followed regarding the building of Government vessels, and it therefore could hardly be expected that navigators would give away the fruits of their experience with submarines, however interesting and instructive such might have been to members of the Institution. Those who had criticised the paper, however, had given con-

sideration to some of the practical as well as the theoretical aspects of the points raised in the paper. Mr Hillhouse, in his remarks, drew attention to the statement that probably one of the reasons which led to the adoption of twin screws, instead of single screws, was the liability of this type of engine—the gasoline type—to break down. He went on to say that this was more a reason for discarding the above type of engine. Apart from other reasons which were also desirable, the adoption of twin screws simply meant putting half the number of cylinders of the same size for a single screw installation, on each shaft, and, therefore, it was perfectly plain that in the event of an accident to one cylinder only one screw would be stopped. The estimate that Mr Hillhouse made of the ratio of the driving power at 12 knots for the awash condition, to the driving power at 8 knots in the submerged condition, was $3\frac{1}{2}$. In making this estimate, it was necessary to include the added resistance of the conning tower in the submerged condition, and this accounted for the ratio of $2\frac{1}{2}$ stated in the paper, and was nearly correct. Regarding the question of surface disturbance he (Mr Johnstone) could not give much information, but from reports that he had read on the behaviour of these vessels, it seemed that it all depended upon the condition of the sea at the time. He imagined that if the surface was calm and glassy the motion of the submarine could be detected easily in daylight. The amount of reserve buoyancy which the vessel had at any instant could be seen by the level of water in the small buoyancy tank, and as Mr Hillhouse pointed out, if the conditions or weight of the vessel were altered, the indication as given by the level in the buoyancy tanks would be altered. Regarding the question of the loss of stability due to flooding—that was an important point. In the calculation made in the paper, it was assumed that a small amount of water flooded the vessel at its worst part, viz., in the hold where it would lodge on the central deck and flow either to the forward or to the after end. The

Mr Johnstone.

water could not be considered to flood the space underneath the deck, as this was minutely subdivided. In the former case there would, therefore, be practically no alteration in the position of G, and the calculation had to be made merely to determine the value of $\frac{i}{V}$ which gave the reduction in metacentric height caused by the free water. The figures in the calculation were, therefore, correct. Mr Hillhouse would also see that the position of the torpedo compensating tanks was such that, practically no alteration in the position of G was caused by the ejection of the torpedo and the admission of an equal weight of water into the tanks. It could, therefore, be assumed that the condition of the vessel could be kept practically the same. Mr Hillhouse also referred to the effect of the conning tower on the stability. The remarks he made in this connection were only true if the submarine were rising rapidly to the surface under the action of a large buoyancy force, but as the motion towards the surface was controlled by the horizontal rudders this state of affairs did not take place. The tendency of the conning tower was to turn the nose of the vessel towards the surface whether the vessel were moving with the axis downwards or upwards. Lieut. Heggstad touched upon a controversial point, viz., the fitting of hydroplanes to the side of the vessel. In his paper, he made no reference to this point as he devoted consideration entirely to the diving type of submarine. Nevertheless the question was one which could be raised in the consideration of the stability of submarines in general. The action of hydroplanes was probably understood. If they were fitted near amidships they had practically no control over the swing of the vessel, and their action was merely one of raising or lowering the vessel bodily. The horizontal rudders at the stern were necessary to control the swing of the vessel. It appeared to him that the introduction of hydroplanes only complicated the service of the vessel. There were two things

to be watched, the swing of the vessel, and the upward or downward motion. In the diving type these were under one control, viz., the horizontal rudders aft. In other types of submarines where hydroplanes were used, small horizontal rudders were necessary. The only advantage that could be claimed for hydroplanes was that the vessel could be maintained with the axis horizontal in the submerged condition, but, to his mind, this did not seem of very great importance. If it was an important point to have the vessel horizontal, then she could be designed so that the deck would be horizontal when the inclination by the head was sufficient to give steady motion. At all events this inclination was very small, and so long as the control of the horizontal rudders was reliable, the diving type was to be preferred without hydroplanes. In some cases, as, for instance, when navigating submerged in shallow water, hydroplanes were necessary. Commander Brandt, who was an experienced navigator, referred to the peculiar action in these vessels—termed pumping—when the vessel was submerged and in a ground swell. That action could be easily explained, and anyone with a knowledge of the theory of sea waves would find it an interesting one to examine. On the basis of the trochoidal theory, (which was so ably propounded by a revered President of this Institution, the late Professor Macquorn Rankine), a calculation could easily be made to determine the extent of the up and down motion of the submarine in a given series of waves. He thought it would be of interest to have some confirmation of such a calculation, if the navigators could by any means determine it practically. Mr Jack discussed the effect on the stability if twin screws were adopted. He suggested placing the storage batteries at the lowest part of the vessel, but he (Mr Johnstone) thought that the necessity of accessibility to the batteries rendered this impossible. The circular section was the best for strength, and it did not matter much what shape the section was, in the question of speed, so long as the curve

Mr Johnstone.

of sectional areas remained the same. In representing the forces acting on the vessel, only one was considered—the resultant. Whatever system acted on the vessel, it could be reduced to a *single force and a couple*. These were clearly shown on the diagram. This resultant could be resolved into two components, R along the axis, and r perpendicular to the axis. The important thing to determine was where r acted. This was the point m, and it did not appear to be a difficult question to find the position of this point by tank experiments. It was a question that could only be solved by tank experiments or by experience in navigating these vessels, but it was necessary to know the above forces and the point m in order to determine the stability. He concluded by thanking those gentlemen who had kindly contributed to the discussion on his paper.

On the motion of the PRESIDENT, Mr Johnstone was accorded a vote of thanks for his paper.

THE MECHANISM OF POWER TRANSMISSION FROM ELECTRIC MOTORS.

By Mr WILFRID L. SPENCE (Member).

Read 19th February, 1907.

INTRODUCTORY.

VERY shortly after having been asked to contribute a paper, the Author had an experience which determined his assent and the subject at the same time.

An endless rope haulage gear was required to be driven by a rather high speed electric motor, the particular arrangement involving a geared speed reduction exceeding 100 to 1. After mature consideration it was seen that a worm wheel drive combined with a single reduction spur gear offered advantages over other alternatives, and as the cost was estimated at a reasonable figure, specifications completely detailed as regards the gearing, and, therefore, relieving tenderers of all responsibility other than for workmanship and material, were issued. The offers received made it clear that few colliery plant makers had any knowledge of efficient worm gear; and one of them, a first class engineer in his own line, regarded its use for the purpose then in view as absurd, indeed, he went the length of asking for an invitation to see the fireworks when the plant was started up.

That the subject of mechanical power transmission, and of gearing in particular, is not really so well understood as is generally supposed, was brought out recently in conversation with an engineering friend (non-electrical) who indicated his conviction that the use of worm gearing was universal for the motor drive on electric tramcars. Even mechanical authorities are sometimes weak on gearing. In C. M. Percy's generally

reliable book "The Mechanical Equipment of Collieries," 1905 edition, p. 199, it is stated of worm gear:—

> "The latter, for small hauling arrangements, has been used with considerable success, the efficiency of a well-designed worm gear, running in an oil bath, being well over 90 per cent. It has the advantages of smooth and noiseless running, *and it is quite impossible for the load to overpower the motor and run back should the current supply, from any cause, fail.*"

This is, of course, sheer nonsense.

These facts are the Author's apology for introducing a subject in which he certainly takes a keen interest, while only following afar off the original workers therein.

At the outset, while it may be necessary to admit that the mechanism of power transmission from electric motors is merely mechanism of power transmission, yet the Author hopes to show that this in certain phases has an interest in association with electric motors differing from its general aspect.

The object of the paper is, first, to bring or keep before engineers possible alternatives to the commoner methods of power transmission from electric motors, so that these latter shall not become stereotyped to the exclusion, by sheer forgetfulness, of those means which, although not of universal application, still offer decided advantages in certain cases. The plan adopted is to show illustrations of actual transmissions—mostly selected as examples of good practice, while a few are shown as embodying features in combination to be avoided. More of the latter would have been interesting, but the natural modesty of engineers with reference to their failures or qualified successes precluded a hearty response to the Author's appeal for photographs of this class.

The object of the paper is, secondly, to show, also by illus-

trations from actual practice, what are considered typical applications of each system, and to deduce therefrom general conclusions regarding the choice of gear.

A little, but not very much, will be said about relative costs of different styles of gears. This subject offers great difficulties, partly from the difference in material and workmanship put into similar gears by different firms, but more because of proprietary considerations.

Belt Drives.

Everyone knows all about belt driving, and Figs. 1, 2 and 3

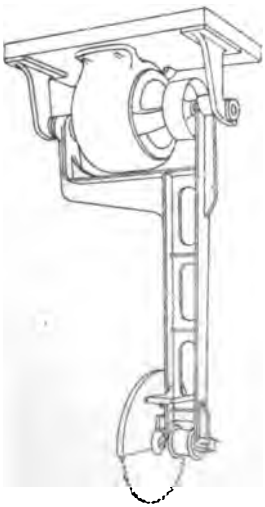

Fig. 1.

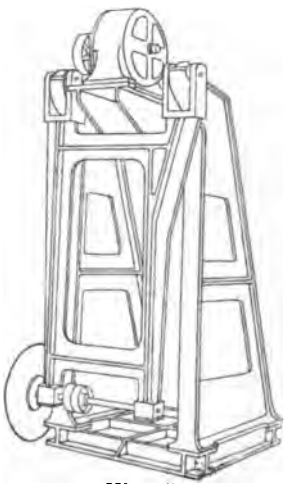

Fig. 2.

show the radically different methods adopted by three prominent firms to accomplish the same end; the connection of a motor overhead to a swing saw below. In the first case (Robinson) the motor is fixed and the saw swings about the axis of the same, so that the belt tension is constant. In the second (United Engineering Company) the motor is similarly mounted, but the saw swings about an axis below the motor

Fig. 3.

—the belt tension being increased as the saw is brought up to its work and relieved when not cutting. It will be observed that this method lends itself to tightening the belt at any predetermined position of the saw, and, by a small adjustment of the motor base, the wear of the saw can be compensated so far as this detail of the belt drive is concerned. In the third (Clifton & Waddell) the motor and saw are mounted at opposite ends of the same pendulum and swing in unison with constant belt tension. This latter is an interesting example of translatory motion of the motor, but it does not appear to have any particular advantage other than that of balancing to some extent the weight of the saw frame.

The application of belts for driving swing saws is considered a typically good one as no other method appears to offer equal advantages. (The use of a silent chain is out of the question, on account of the extremely high belt speeds, running, in certain cases, up to 7,200 feet per minute.)

The modern tendency in machine tool equipment is to have a positive connection between the motor and its work, and in

principle this is unquestionably right as tending to definite speeds. But just as in the old days when single phase electric distribution for lighting purposes inevitably led to all descriptions of poor steam engineering, so the indiscriminate use of three phase motors (and equally of direct current motors inappropriately wound) involves at the present day, the retention of methods which permit of slip between the driving and driven members. In so far as slip means not only absolutely wasted energy, but also loss of capacity, as well as wear and tear, it is to be strenuously avoided wherever possible.

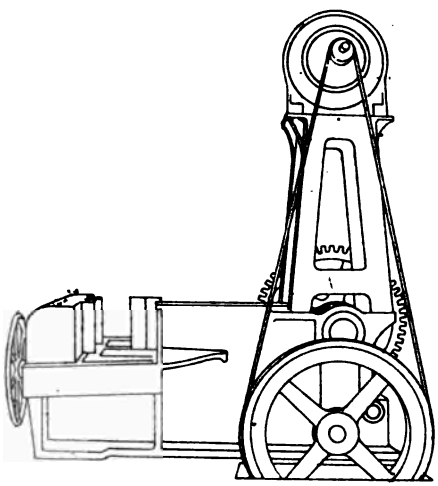

Fig. 4.

Fig. 4 (Craig & Donald) is for present purposes to be taken as representing a typical shipyard tool driven by a fly-wheel kept spinning by the motor—that is how all heavily fly-wheeled machines are to be regarded as operating. A fly-wheel to be of efficient service must alternately accumulate and deliver up its stored energy, and it cannot possibly do so without alternately rising and falling in speed of rotation, not necessarily

in average revolutions per minute, but certainly in angular velocity.

The most efficient motor, therefore, from this, the principal point of view, is the one whose speed varies inversely as the load. Practical considerations set upper and lower limits, but within these the speed should bear a straight line relation to the output. The speed of a shunt wound direct current motor, and of polyphase motors generally, tends to be constant, the variation between no load and full load of a good 20 H.P. machine of either class is of the order of 3½ per cent.; and as, owing to frictional losses in the tool, the variation of external load is only, say, 50 per cent., the actual speed variation of such motors is about 2 per cent., increasing somewhat if remote from the electric supply centre. This 2 per cent. difference in speed is wholly inadequate to develop any useful effect from the fly-wheel, and, in consequence, the motor tends to take up almost the whole of the load fluctuations—usually with disastrous results. It is just here that relatively poor practice steps in and saves the situation. A belt drive with short centres, small arcs of contact and not too tight at that, is quite a good thing to use with shunt wound direct current and standard polyphase motors on punching and shearing or similar fly-wheel machines; for as the fly-wheel in giving up its energy begins to slow down, the motor tending to continue at normal speed and taking more than the corresponding current to produce it, would develop an enormous overload torque were it not for the belt slipping at such times. Reverting then to Fig. 4, it may be said that this drive is really quite appropriate with polyphase motors and with shunt wound direct current motors, the use of which latter, though by no means unknown on the Clyde, is altogether indefensible for the purpose.

Later on, when dealing with chain drives, appropriate means will be indicated for positively connecting invariable speed motors with variable speed fly-wheel machines.

Fig. 5 (Tangye) illustrates a drive, believed to have come originally from America, which the Author has applied to

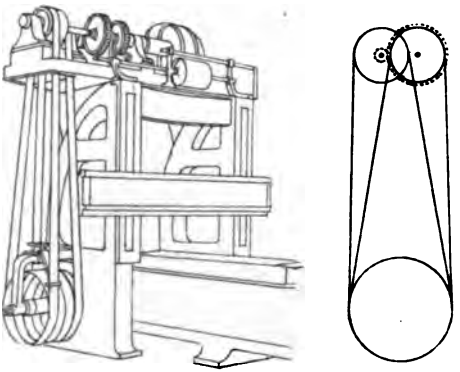

Fig. 5.

several machines; it is by no means a bad one for ordinary planers in which fly-wheel action plays a large part. The quick return stroke is worked from a pulley on the high speed motor shaft, and the cutting stroke from a pulley on a geared shaft which, running in the opposite direction and at a slower speed, obviates a crossed belt, and with large pulleys improves the driving power of the belt. In all such arrangements it is of vital importance to reduce to the limit the weight of reversing pulleys, which should be of the all-steel built type. The driving pulleys, but especially that on the motor shaft, should be as heavily rimmed as possible, while loose pulleys should be smaller in diameter than the fast ones. If direct current, the motor should be well over-compounded; if three phase, it should be of the slip ring type, and the maximum load at reversal will be greatly reduced, without seriously impairing the all-day efficiency, if a small amount of resistance be left permanently in circuit.

Fig. 6, a plate edge planer drive, is an example of how not to do it. The motor is a direct current machine and might

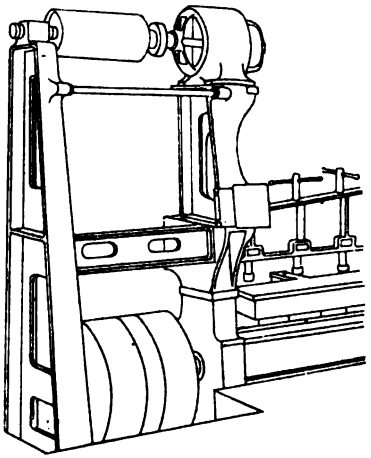

Fig. 6.

be over-compounded to obviate the slight overloads at reversal which, in these tools, are not serious. The features of the arrangement referred to in connection with Fig. 4, while unnecessary in this case, are still prominent. Except for the crossed belt, the arc of contact is deficient, and the belts are too wide to be satisfactorily shifted on the small motor pulley. Without altering the broad features of this particular transmission, the drive would have been improved if the motor had been geared, say, 3 to 1 on the top shaft, so that the pulley might have been correspondingly larger.

Fig. 7 (Sellers) is interesting as a very good example of belt driving; generous pulleys, a wide belt with adequate means for tightening, a low speed reduction, the motor accessible, out of the way and not occupying floor space—all in combination with pneumatic reversing friction clutches which are giving very good service in the United States.

Direct Coupled Drives.

The use of electric motors running at the same normal speed as that of the power consuming device, is rightly becoming

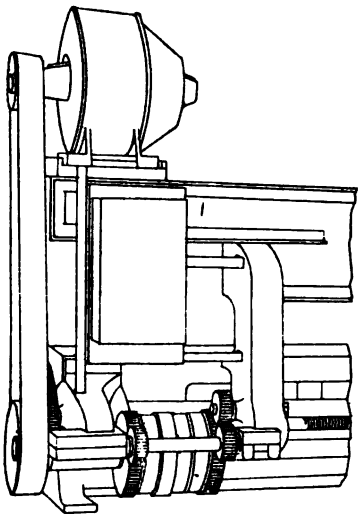

Fig. 7.

more common every year. Of almost every piece of mechanism, it may be said that the slower the speed of operation the greater is the ultimate satisfaction; and there can be no doubt but that relatively slow speed motors are more desirable tools than those running at very high speeds and necessitating much mechanism to reduce them.

Within the last three or four years there has been one very noticeable development in the opposite direction, namely, a call for motors running at higher speeds of rotation than could at first be obtained. Centrifugal pumps for high lifts very commonly have speeds of 1000 revolutions per minute or more, quite irrespective of the size of the pump and of the motor required to drive it; 1000 H.P. at 1200 R.P.M., for example, is not a limiting case. This demand, however, is special and does not affect the broad preference for generally slower speeds; indeed several users of these very high speed motor turbine pumps have expressed a determination to instal slower speed equipments for their future requirements.

The extreme beauty—in the mechanical sense of directness and simplicity—of a good coupled moderate speed drive, is admirably shown by the horizontal band log saw, Fig. 8

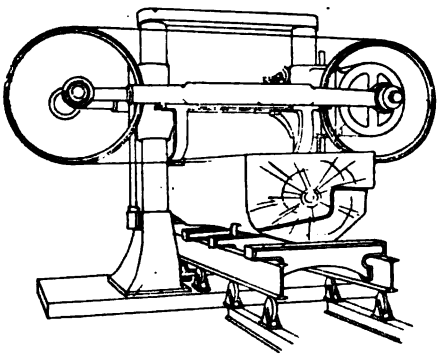

Fig. 8.

(Ransome). The motor in this case, as will be seen, is not merely attached to the band saw spindle, but is built round it. The wall diagram conveys the impression of the machine running, but the actual photographic print, which is on view, must be examined to realise the complete absence of vibration with the saw running at 7000 feet per minute. It will be noted that the elemental simplicity of this drive is attained by taking advantage of the portability of the motor—here limited to one direction of motion. Other things being equal, it is not good practice to build the motor homogeneously into the tool; but in this case the amount of special work is so small and the advantages are so great that the departure is amply justified.

Another good example of direct coupling is furnished by the radial drill, Fig. 9 (Kendall & Gent) in which the translatory motion of the motor is seen in a somewhat unusual form—swinging about a vertical axis in line with the motor shaft. The general arrangement is commendable in that any standard motor can be used.

As will be developed subsequently, the driving of centre lathes is not a simple problem, and silent chains have been much used for the purpose; but by far the neatest solution, for new machines at any rate, is probably that represented by Figs. 10 and 11 (Lodge and Shipley). The variable speed

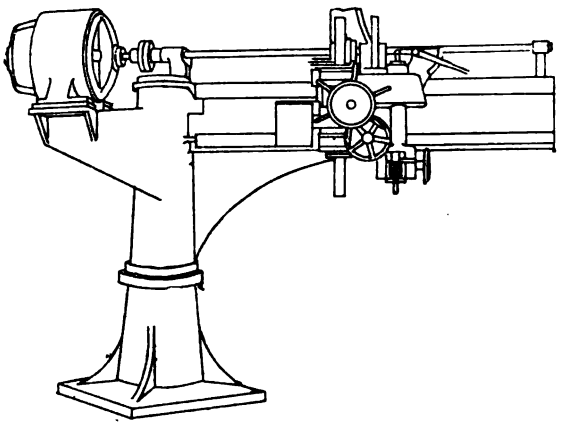

Fig. 9.

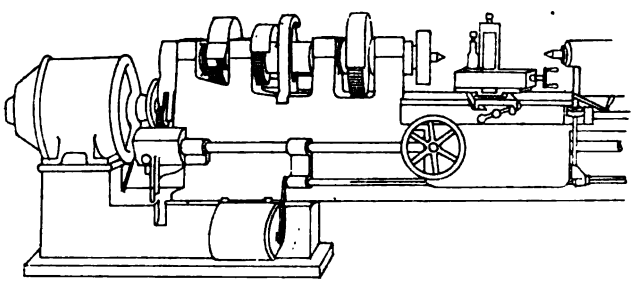

Fig. 10.

motor with a 2 to 1 range is carried well above the floor level on a stool, cast as an extension of the cabinet base, and is coupled to a special shaft with two or more alternative pinions, through which power is transmitted in the way more or less common to all geared headstocks. The outstanding feature is

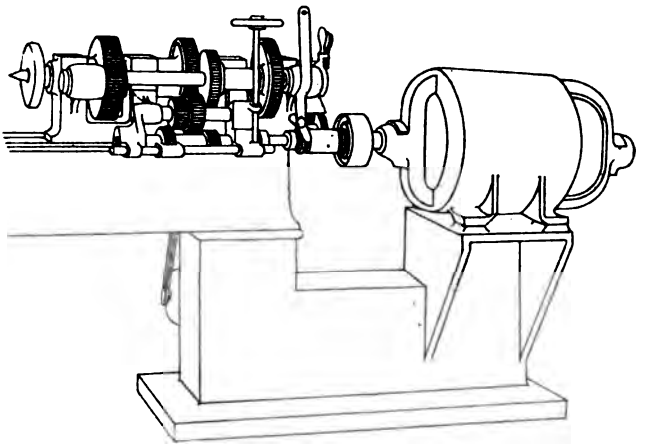

Fig. 11.

the disposition of the motor in line with the lathe bed, so that the occupied floor area is a regular floor-space-economising, as distinguished from an irregular floor-space-wasting, figure. The arrangement permits of the use of any standard motor. A good feature is the hand wheel on the motor shaft for facilitating small movements of the lathe, Fig. 10, or the clutch for the same purpose, Fig. 11. It will be observed that the motor is controlled from the saddle.

A different type of coupled drive, available only with continuous current multipolar motors, is well shown by Fig. 12

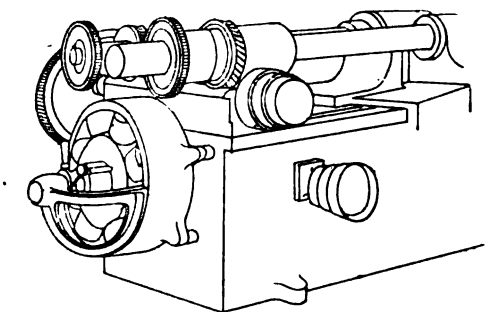

Fig. 12.

(Newton). The field magnet frame is bolted flat up against the machine tool headstock, and the armature is sleeved over an extension of the first motion shaft from which it is readily detachable. The arrangement is extremely compact, and the only disadvantage is that the motor field frame is slightly special. This drive has been largely used in the past on cranes for the crab motors, and was only abandoned for the reason indicated—the motors not being strictly standard.

The undoubted economy of steam power generation in textile mills has kept the electric motor out of all but a small minority of them. In this connection, Fig. 13 (British

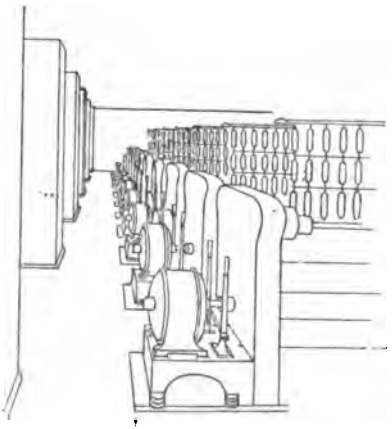

Fig. 13.

Thomson-Houston) showing a group of motors direct coupled to cotton ring spinning frames, while possessing no features which other than collectively are noteworthy, is of special interest as demonstrating the fact that a serious beginning has been made with the application of electric motors to individual machines in a very conservative, because highly developed, industry. The inclusion of this illustration, and it is only one of several which might be shown, will have been justified if it helps to bring home to general engineers the

probability that if one motor one machine is considered good enough in a cotton mill, it will pay even better almost anywhere else.

A type of coupling not commonly used, but of very great service in some cases, is shown by Fig. 14. This modified

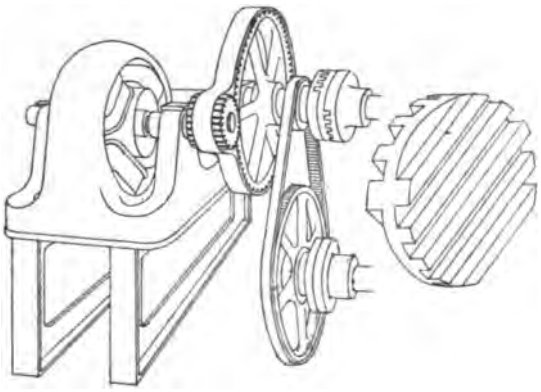

Fig. 15. Fig. 14.

Oldham coupling (Humpage, Jacques & Pedersen) could not with advantage be replaced by any other form in the application illustrated by Fig. 15 (the Author). This is a friction paper calender. The main drive is on the upper bowl, and the lower drive is an inverted one, that is, power is returned to the motor, the bowl being retarded by the gear. Owing to wear of bearings, and gradually lessening bowl diameters, the height of centre of neither one nor the other is fixed; but the transmission is well carried out with uniform angular velocity by this coupling. Where, as in this case, the shafts are liable to be considerably out of line, the middle member should be of brass.

Flexible Shaft Drives.

Fig. 16 (E.C.C.—Wicksteed) is an example of flexible shaft transmission. A detail of this shaft is shown on the drawing,

from which it will be seen that every joint is guided by a ball bearing, so that friction against the protecting case is reduced to a minimum.

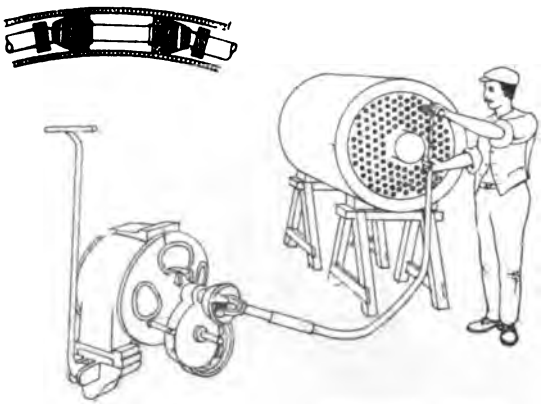

Fig. 16.

Direct Coupled Vertical Shaft Drives.

The normal direct coupled plant has a horizontal shaft, but, particularly since the introduction of first class ball bearings, the vertical shaft motor has found a considerable field of application, mainly for centrifugal pumps and centrifugal separators. An example of the latter is shown by Fig. 17 (Pott, Cassels & Williamson). The general arrangement and many of the details, as well as the mode of operation of these machines are highly interesting. The character of the load, too, is peculiar. Initially it consists almost entirely of acceleration; friction plays a very small part, and subsequently on the attainment of speed it consists almost entirely again of windage, thereafter the work of separation being soon completed, the power is cut off and braking is resorted to for prompt stopping.

As to the construction; the vertical armature of the motor is suspended from the upper end by a compound thrust and

journal ball bearing, the lower end is centred only in a plain ball bearing, both rigidly fixed. The separator basket is similarly suspended from the upper end of its spindle; the lower end is altogether free and in operation owing to the inevitable dissymmetrical loading, it vibrates considerably. The relative motion of the two shafts makes a rigid coupling

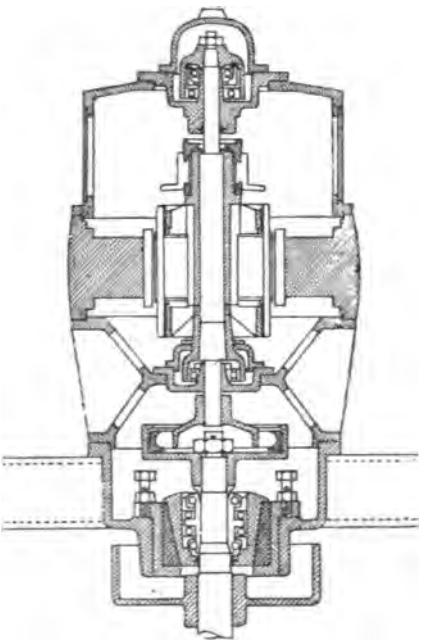

Fig. 17.

impossible; a flexible positive coupling would offer no difficulties, but the makers of these machines have done very much better by constructing the coupling as a full automatic friction clutch of the type introduced many years ago with single phase electric motors. The clutch is composed of three members—an inner spider fixed on the motor shaft, a drum surrounding it, and ponderable masses rotated by, but not

fixed to, the first member; in other words and appropriately, a pure centrifugal friction clutch. The beauty of this device, in this particular application, is seen in the resulting abolition of all starting and accelerating switch gear as ordinarily understood. Each motor is controlled from a single main switch only, fitting the machines for the least skilful attendance. Taking the case of a direct current motor: it is series wound either wholly or with an excessively small amount of shunt excitation, and when switched full on runs successfuly without sparking, because initially there is no external load; the friction weights are not thrown out until appreciably after the motor has started, and then they slip owing to insufficient centrifugal force. Even when the motor is up to speed, they still slip until the basket is fully accelerated; thus the load is applied with perfect graduation and yet the coupling drives practically solid in the end, for the necessary torque has then fallen to that of windage only. This windage load is, without adventitious aid, fortunately quite enough to keep the top speed of series motors within safe limits.

The other application of vertical spindle motors is well shown by Figs. 18 and 19 (Laurence, Scott). The general arrangement is very like that last described, except that the clutch is replaced with pin couplings—not bolted—the intention being to carry the weight of the motor, shaft, and pump impeller each on its own thrust bearings. This arrangement of submerged pump, working in the same power house with the more usual one of motor and pump above high water level (and provided with auxiliary vacuum pump for the suction pipe) is greatly preferred to the latter.

A test made of a 20 feet length of $2\frac{3}{4}$ inches vertical shaft suspended from the top and guided by two additional ball bearings, showed that to spin it continuously at 900 revolutions per minute only absorbed 0·133 B.H.P.

In this connection mention may be made of the fact that, although well known and occasionally seen, ball and roller

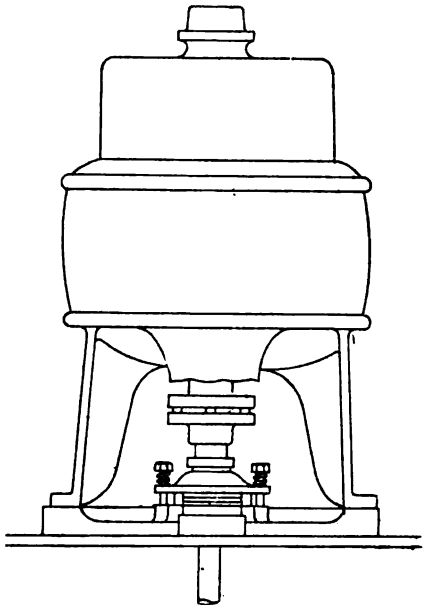

Fig. 18.

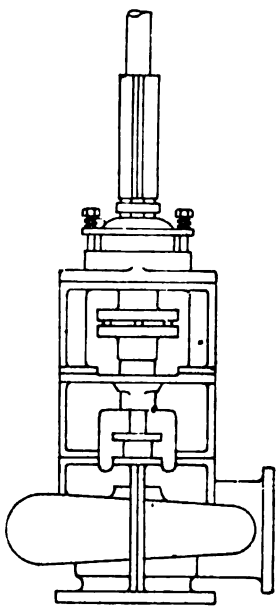

Fig. 19.

bearings are not nearly as often used as they should be in the transmission from electric motors. The Author is using roller bearings in the ordinary way, and also for the main bearings of an endless haulage gear, the speed of which, 7 revolutions per minute, was considered too low for satisfactory operation with self oiling brass bushed plummer blocks.

Before leaving the subject of direct coupling, attention is called to the large cross compound air compressor, Fig. 20,

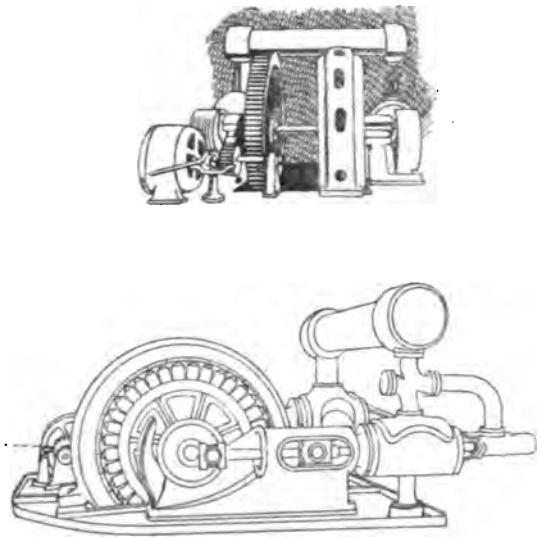

Fig. 20.

which has a peculiar interest as exemplifying on no small scale the very common misapprehension of fly-wheel action. The slow speed motor mounted direct on the crank shaft is of the synchronous type which, as is well known, revolves with an angular velocity corresponding exactly with that of the generator and, therefore, absolutely independent of the cyclic variations of crank shaft effort. The large figure is reproduced to bring out the fact of synchronism, and the small figure

shows that a fairly large and heavy fly-wheel has been added. Seeing that the angular velocity is, by hypothesis, invariable, it is inconceivable that the fly-wheel can either store up or give out a particle of energy. Had the motor been compound wound for continuous current, the case would have been entirely changed, and the fly-wheel would have performed efficient service.

Spur Wheel Drives.

Of all the numerous methods of positive transmission, spur gearing is certainly the most common. It is none the less not always well done.

Fig. 21 (Vaughan) is a good example of plain straightforward spur gear applied to a 25-ton crane crab. Attention is directed to what at first sight appears to be merely the large number of teeth; on a closer inspection, the large gear reduction; but finally and in essentials, the largeness of the *ratio* Width of wheel face to Pitch of teeth. This feature, a very desirable

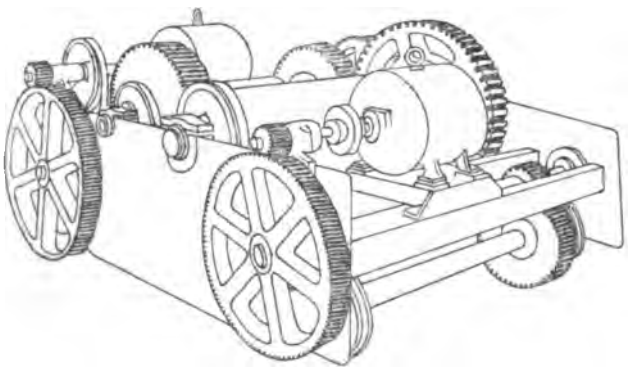

Fig. 21.

one in all electric motor gears, as tending to quietness and smooth running, is particularly so with direct current equipments where vibration is not conducive to the best commutator performance. Bearing in mind that crane motor speeds are

very low, it may be inferred that the gears shown run almost noiselessly, and, in fact, they do so operate even with steel pinions.

In general, the use of metal pinions for the first motion gear is not to be commended, the exceptions being where the motor speed is low, the pitch very small in relation to width of wheel face, or where the wheels are totaly enclosed in an oil tight gear case.

An excellent example of total enclosure is the standard traction motor of which Fig. 22 (Dick, Kerr) is typical. The

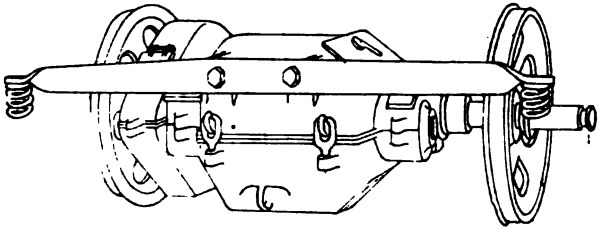

Fig. 22.

pinion is of forged steel, and the wheel of cast steel running with grease lubrication, the gear reduction being of the order of, but never exactly, 5 to 1. Some standard motors run at a slightly slower normal speed, and have reductions of about 4·78 to 1. The feature which originally made traction motors a success is the Sprague suspension. The motor is hinged on the car wheel axle on which half its weight is carried as a dead load, the other half of the motor weight is suspended through springs from the truck so that the motor has freedom of limited motion round the axle which can, therefore, rise and fall without disturbance of the gears. The Sprague suspension is sometimes used for stationary work, where it has the effect of an elastic coupling and relieves the controller, the motor, and gears, of some of the shocks of irregular load or of reversal. Fig. 23 (Lancashire Dynamo & Motor Company)

shows it applied for an analogous purpose—that of preventing vibration from the power hammer reaching the motor.

Reverting to the question of pinions, ordinarily a raw hide or paper pinion is much better than a metal one, and Fig 24 (from a recent American advertisement) shows how the pinion should not be constructed. Both materials named, apart from their surroundings, are utterly unmechanical; they depend absolutely on outside support to carry load, and whenever axial compression is relieved, the teeth bend over, lose their true form, become noisy, and rapidly deteriorate, unless the

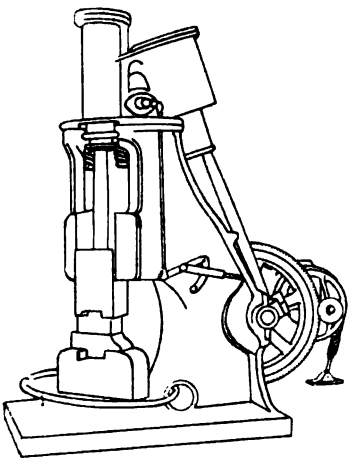

Fig. 23.

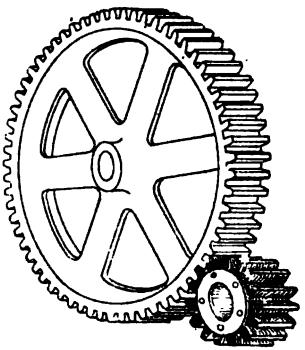

Fig. 24.

load is light out of all proportion to dimensions. The weak point of most built pinions is the shrouding—the side plates are not usually stout enough to hold the hide or paper up to its work.

The very few failures (all several years ago) out of an extremely large number of applications of which the Author has cognisance, were due to thin side plates necessarily accompanied by inadequate compression. This question is, of course, very much one of the point of view, for if, as indicated,

the general wheel dimensions are chosen so large that the tooth load is light, then correspondingly lighter side plates may answer, but unquestionably that is expensive design. The Author's practice, which has been quite successful in respect of smallness of wear, has commonly been to load the pinion as if it were of cast iron, and under such conditions the standard side plates are not adequate. Without being able to justify it theoretically, he has found that the empirical formula

$$t'' = 0{\cdot}5\ P'' + 0{\cdot}025\sqrt{D} + 0{\cdot}25''$$

where t = thickness of side plate,
P = circular pitch of teeth,
D = pitch diameter of pinion,

agrees closely with heavily loaded successful pinions designed in a wide range of sizes by eye—that is, to look right mechanically when drawn out full size.

In the design of any pair of motor gears, the determination of the ratio, Width of face to Pitch of teeth is of prime importance. For cheapness, the ratio must be small, for every other consideration it should be large. The old millwrighting proportion of 3 to 1 or thereabout, appropriate with cast wheels, is inadequate to meet present day requirements, and it is no uncommon thing to find the working width of wheels equal to or greater than six times the circular pitch. The problem is to find a mean between the cheap, but noisy, and the more expensive silent wheels. The determining factor is the peripheral velocity in ordinary wheels and the speed of meshing in complex forms. Starting with a minimum ratio of 3 to 1 for no velocity, ending with $6\frac{1}{2}$ to 1 for 2500 feet per minute, and aiming at between 5 and $5\frac{3}{4}$ to 1, which are known to be good proportions for the range of moderate speeds ordinarily met with, the Author sketched out some years ago a curve to systematise his work. This curve is now found to agree with

$$R = 3 + 0{\cdot}05\sqrt{V}$$

where R = ratio of wheel face to pitch of teeth,
V = peripheral velocity or speed of meshing in feet per minute.

This rule is again empirical and has no other justification than that it agrees with a lot of successful and economical examples and cannot in any case be very far from basic fact. In applying it, the limitation of available shaft length has to be kept in view, as also the possibility that with great overhang an outer bearing may be necessary.

Regarding the strength of, or permissible loads on spur wheel teeth, the writer has for very many years used with complete success the methods of Wilfrid Lewis, and would confidently recommend their adoption to those who, and their name is legion, in the design of gearing have hitherto relied on millwrighting data which take no account either of peripheral velocities or of the number of teeth as affecting the permissible tooth load.

The following examples serve to show the difference between Lewis and millwright tooth loads for a wheel of 1-inch circular pitch by 4½ inches width of face, of cast iron—

No. of teeth in wheel.	P.L. Velocity. Ft. p.m.	Lewis load lbs. 15° involute.	Millwright Load. $HP = \frac{P^2 BS}{1000}$	Millwright Load. $HP = \frac{D\nu bN}{1000}$
13	0	2550	149	565
,,	600	1270	149	565
,,	1200	820	149	565
21	0	3250	149	565
,,	600	1630	149	565
,,	1200	1080	149	565
,,	1800	810	149	565
Rack	150	3500	149	565

One method of fixing an unknown dimension is to "Make a guess, double it, and add 50 per cent.," and this Table goes

far to show that the chances are that it will as occasionally be right as are the generally accepted rules.

Among plain spur geared drives with raw hide pinions, Fig. 25 (De Bergue) is of interest in that it serves to bring out

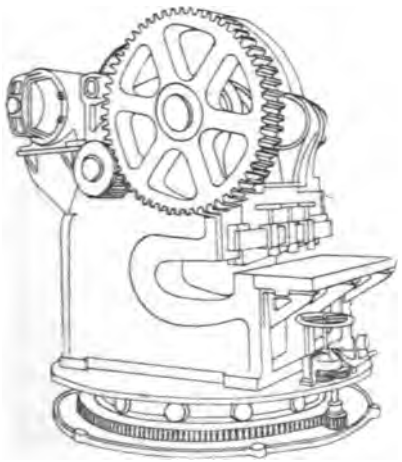

Fig. 25.

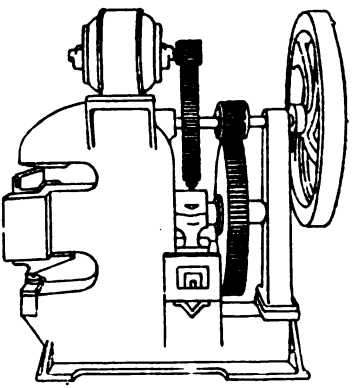

Fig. 26.

admirably the freedom from restrictions of the designer of motor driven special tools. This plate shearing machine is mounted on a roller-borne turntable and is thus enabled to meet half way at least unwieldy plates coming from every direction.

Fig. 26 is an illustration of a machine, entirely successful from the operator's point of view, and yet embodying features in combination to be avoided. The motor is of the squirrel cage polyphase type with, as already pointed out, a strong tendency to constant speed regardless of load, and here it is positively geared to a tool designed to work by fly-wheel action, that is essentially one regularly going through cyclic changes of angular velocity of the order of from 15 to 20 per cent., or more. The two things are incompatible and result both in the motor being considerably larger than it should be and in

its being subjected to very heavy overloads, while the fly-wheel is of no substantial service and might be removed without serious detriment. A good feature is the appreciable length of shaft between the fly-wheel and the nearest gear.

Idler Wheel Drives.

The interposition of an idler between motor pinion and driven wheel, to make up the distance between centres fixed by other considerations, is sometimes preferred to a chain drive. The system has not infrequently been used in this country, but is much more common in the United States. Figs. 27 (Betts), 28 (Bickford), and 29 (American Tool Works), are typical examples. The former shows the motor very well placed on the upright of a slotter on which, without special precautions, a chain transmission would be unsatisfactory; the same may be said of the last named, which is as fine an example of guarding as need be desired. The other is a standard drive with its designers, and is also well protected.

No user of the idler transmission from electric motors appears to have realised a very interesting feature arising out of it, namely, the practicability of a gear ratio much higher than the common 2, 3, 4, or 5 to 1. In any silent train of three wheels raw hide will, of course, only be used for the intermediate one; the motor pinion may, therefore, be of steel, and if of 13 teeth only, it will even then be much stronger than the idler which, as the weakest link in the chain, need alone be considered in taking out strengths. For example, Fig. 30 shows, to the same scale, two idler drives each computed to transmit 10 H.P. (with 15 per cent. overload) from a motor to a driven shaft running at 100 R.P.M. The ordinary five to one reduction necessitating a large slow speed, 500 R.P.M. motor is shown at A, and a nine to one reduction with a smaller, 900 R.P.M. motor is shown at B. In the former case the cast iron pinion is the weakest link, while in the latter it is the raw hide idler—each uniformly stressed to 5000

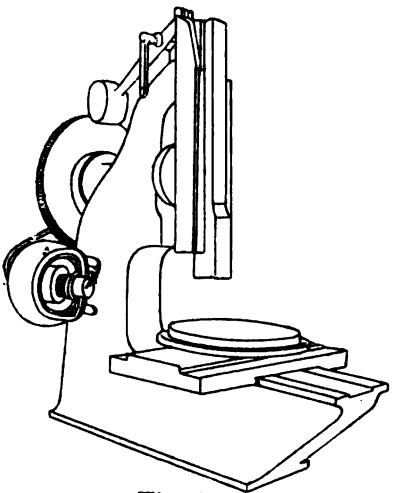

Fig. 27.

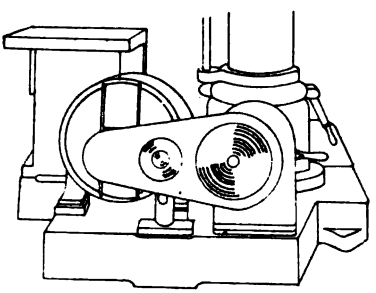

Fig. 28.

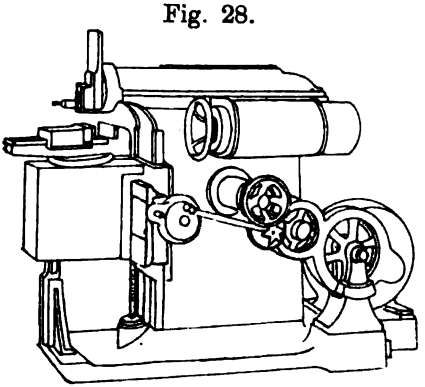

Fig. 29.

lbs. per square inch. The outstanding feature in this comparison is that, with the same centres, a gear reduction greater by 80 per cent. is obtained with the large wheel increased only 12 per cent. in diameter and $7\frac{1}{2}$ per cent. in weight. This possibility should be kept in view for reductions between 5 and 10 to 1.

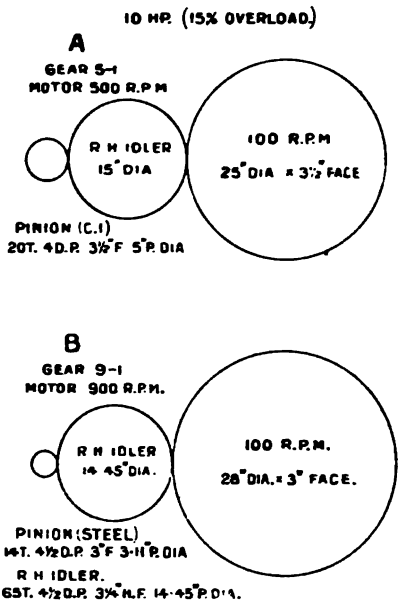

Fig. 30.

Where gears of any kind are exposed to much dust, they may with advantage be completely enclosed; under less severe conditions, and to prevent accidents in exposed positions, they should be substantially guarded. Cast iron guards are preferable in most cases, but are not justified commercially except on repetition jobs and on very high class work. Fig. 31, from the Author's practice, shows a double reduction spur-geared mine pump with sheet iron guards over wheels and crank shaft. Incidentally the pump is fitted with forced lubrication

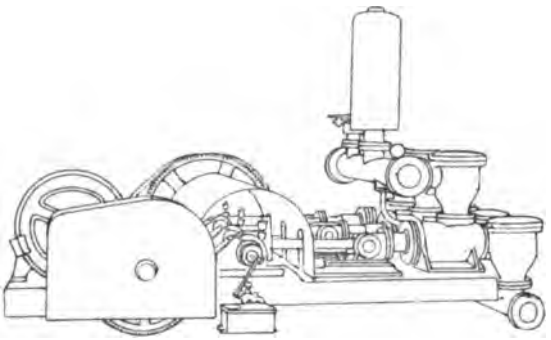

Fig. 31.

to main bearings, crank pins, and crossheads; and the crank shaft guard serves as a cover for the oil pan in which the lubricant is collected before returning to the filter and circulating pump.

Internal spur gears, of which Fig. 32 (Alley & MacLellan)

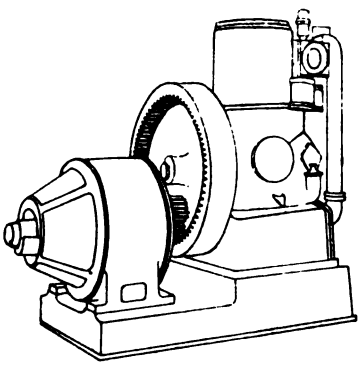

Fig. 32.

is a good example, require no special wheel guards. In general this gear is only applicable with the wheel overhung, but in such cases the arrangement is very compact, and a

reduction of 7 to 1 is quite easily attained without extravagant dimensions, as the wheel tooth form is naturally stronger and the load is better distributed than with external wheels.

It is not advisable to cut, and it is positively reprehensible to cast, teeth in the rim of any heavy fly-wheel, because the inevitable errors in pitch necessarily involve corresponding acceleration or retardation of the fly-wheel mass with abnormal and fracturing tooth loads.

Fig. 33 (the Author) is a hybrid internal gear-coupling

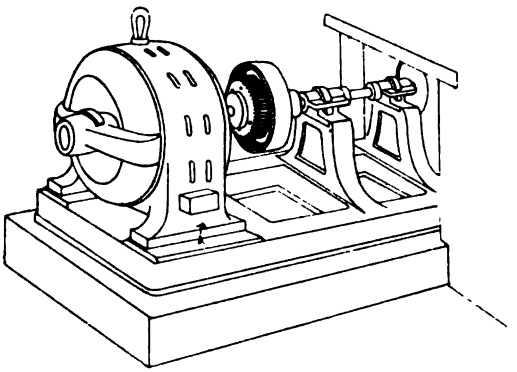

Fig. 33.

mechanism produced to meet as economically as possible (three phase current being purchased from a Power Company) the conditions of ventilating fan driving at a colliery, both during the first few years of development and permanently thereafter. The motor is of the short circuited rotor type, but has two stator windings, one for full speed full load, the other for half speed quarter load, both, of course, free from resistance regulation and immediately available. When direct coupled, the fan runs at either 575 or at 285 R.P.M., producing respectively $2\frac{1}{2}$ inches and $\frac{5}{8}$ of an inch water guage. By taking out the coupling bolts and shifting the motor some 2 inches sideways (steady pins locate exactly each position), the

raw hide pinion engages with the internal wheel surrounding and forming part of the fan half coupling; and the fan is then driven at 78 per cent. of the motor speed, say, 450 and 222 R.P.M. producing respectively $1\frac{1}{2}$ inches and $\frac{3}{8}$ of an inch water gauge, which are considered adequate for full and reduced ventilation during development, while the higher pressures will meet the same requirements when the mine is completely opened out, with the advantage that the drive is then direct.

Fig. 34 (the Author) is an electro-magnetic friction clutch

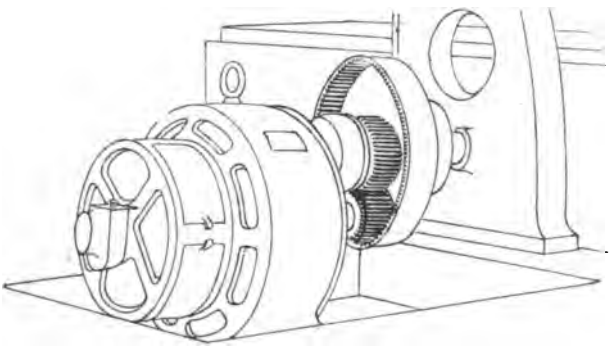

Fig. 34.

reversing gear for a planing machine. The motor pinion engages constantly with the internal, as well as with the external wheel; the former drives the slow speed cutting stroke, and the latter the higher speed return stroke. Both of the wheels normally run free, and the circuits of the electro-magnetic clutches are so arranged that only one can be engaged at a time. This gear is more compact than others for the same purpose, and does not share with the reversing motor equipment the defect of abnormal current consumption at the end of every stroke. The gear is not applicable with polyphase motors, but can be used with direct current motors for equal cutting speeds both ways, by enlarging the internal wheel somewhat and varying the speed of the motor to compensate for the difference in gear ratios.

For the individual drive from standard constant speed motors—either continuous or three phase—of machine tools requiring numerous speeds, there is probably nothing better than the "gear box" arrangement, of which Figs. 35 and 36

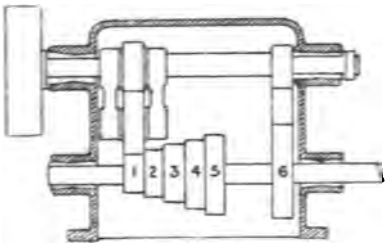

Fig. 35.

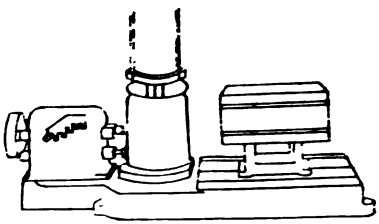

Fig. 36.

(Bickford) are typical. This gives six speeds in a geometric or any other desired range. The fixed pinion and idler are added to give the slowest speed—gear 6 contains a free wheel clutch, the effect of which is to keep the driven shaft always moving and so reduce shock when a higher speed gear is engaged.

Self Contained Reducing Gears.

There are on the market a number of gears to some extent special or proprietary in the sense that each type is identified with one particular maker. Several of these are of considerable merit, most of them can be purchased as complete units adaptable to any motor, and all have the advantage of being totally enclosed. Perhaps the simplest is the plain double reduction gear with double helical all-cut wheels, Fig. 37

(Power Plant Company), available for any ratio between, say, 8 and 35 to 1. The short independent high speed shaft runs in a self-oiling bearing on one side of the pinion, and on the other, in a bearing within the low speed enlarged shaft-end (both run in the same direction). The first motion large wheel is keyed to a bush elongated and cut to form the second motion pinion, the two running loose on a long fixed stud. The slow speed shaft is also independent and ordinarily runs

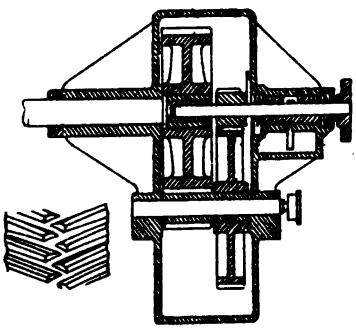

Fig. 37.

in a plain cast iron bearing with grease lubrication. The whole arrangement is very compact, and where quietness of operation is desired the use of double helical wheels is conducive to its attainment. An advantage and a disadvantage, according to circumstances, is that the high and low speed shafts are in line.

For purposes of comparison the cost of a 30 H.P. gear reducing 800 to 31 R.P.M., with all-cut double helical steel wheels is £71.

Planetary Gears.

Most of the other special self contained reducing gears are of the planetary type, and can be divided into two classes—simple for ratios up to 20 to 1, and compound for anything between, say, 16 to 1 and 400 to 1, or more.

Of simple planetary gears, the simplest is the Centrator,

Fig. 38 (Lahmeyer). It is a pure friction transmission, but a highly ingenious one, in that all thrusts are balanced and adequate means are provided for taking up wear. The external fixed ring, three planetary cylinders, and the motor pinion or drum are all perfectly plain, they have no teeth. The cylinders are centred on studs fixed in the planet ring which drives the slow speed shaft. All the details, including

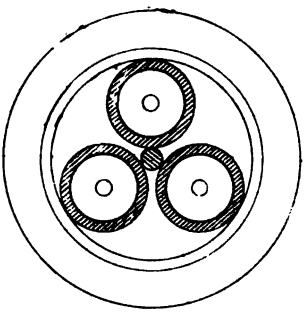

Fig. 38.

lubrication, appear to have been thoroughly well worked out. The gear is compact and takes the place of one bearing frame on the motor, the armature shaft at this end being centred by the pinion drum only, running as a three-roller bearing. At the other end it runs in a ball bearing. The gear, which is limited to motors of less than 7 H.P., is not on the market apart from the motor, but the cost of motor complete with Centrator gear for any reduction between 6 to 1 and 12 to 1 is only 5 per cent. higher than the cost of the same motor fitted with the ordinary 5 to 1 spur wheel reduction.

On the same principle, but with cut toothed wheels instead of friction surfaces, is the Humpage, Jacques & Pedersen gear, Fig. 39. This is, of course, not limited to small capacities, but being of the simple planetary type it is limited to reductions between about 5 and 20 to 1, within which range the efficiency is claimed to be very high, for example, 97·5

per cent. for the 25 H.P. size reducing 10 to 1. The gear ratio $R = \frac{S + A}{S}$ where S = diameter of sun pinion, and A = diameter of the annular fixed wheel.

The cost of this gear, 30 H.P., reducing from 800 to 40 R.P.M. (20 to 1 being the limit) is £60.

For very high ratios of reduction the Baker compound planetary gear, Fig. 40, standardised for reductions between

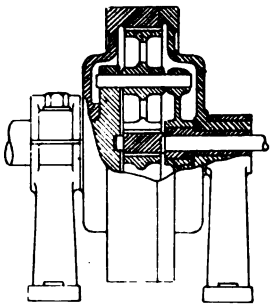

Fig. 39.

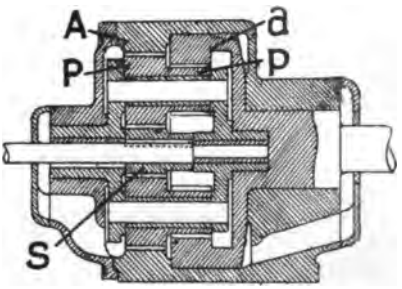

Fig. 40.

400 and 16 to 1 is useful. In this case the slow speed shaft is not driven from the planet ring, but from a second annular internal wheel meshing with auxiliary planets upon the same axes as, and rigidly attached to, the primary planets. The action, somewhat difficult to follow in detail, will be understood if considered in this way:—The first reduction is of the simple sun and planet order; the motor (sun) pinion S, engaging with the planets P, causes them to rotate about their own axes, and in doing so they roll around the fixed internal annular wheel A. For the next step, and to simplify it only, the primary and secondary planets P and *p* are to be regarded as alike, as also are the annular wheels A and *a*. Under these conditions it will be seen that although free to move the secondary wheel, *a*, has no tendency to rotate. Actually, however, the secondary planets, *p*, are smaller than the primary ones, and rotating at the same angular velocity,

they have a lower peripheral speed than that which, as has been seen, is necessary to leave the wheel A standing; hence wheel *a* is left something short of standing, in other words, it is brought along slowly in the same direction as the rotation of the planet ring. Conversely, if the secondary planets be larger than the primary ones the wheel *a* is left something more than standing, *i.e.*, it runs backwards. Broadly, the more nearly the primary and secondary wheels approximate in size the greater will be the reduction of speed, and, on the other hand, the greater the difference between the primary and secondary wheels the less will be the ratio of reduction. Actually it is—

$$R = \frac{S + A}{S} \times \frac{aP}{aP - Ap}$$

where S = diameter of sun pinion,
A = ,, of fixed annular wheel (primary),
a = ,, of rotating annular wheel (secondary),
P = ,, of primary planet,
p = ,, of secondary planet.

The cost of a 30 H.P. gear of this type reducing from 800 to 31 R.P.M. is £76.

The foregoing simple and compound planetary gears have at least two, and often three, sets of planets, so that they are balanced both as regards thrust on the high and low speed shaft bearings and in respect of distribution of weight. Moreover, the distribution of load over two or three sets of teeth has the advantage of keeping down the dimensions without resorting to unduly high speeds of meshing. (In a 2 H.P. gear reducing 21 to 1 from 1400 R.P.M., the actual speeds are 503 and 335 feet per minute). The compactness is well brought out in Figs. 41 and 42 (Baker).

The gear shown in section Fig. 43 and in application Fig. 44 (Ross) differs from both of the foregoing in that the drive is taken through a single pinion and is, therefore, unbalanced.

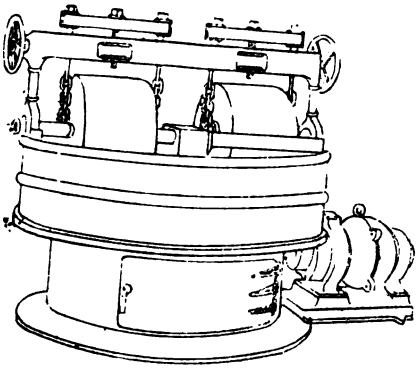

Fig. 41.

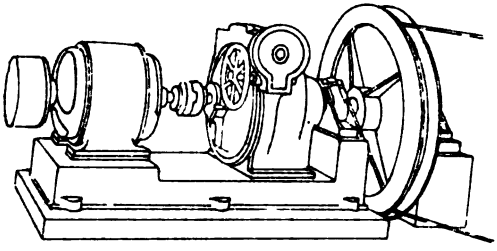

Fig. 42.

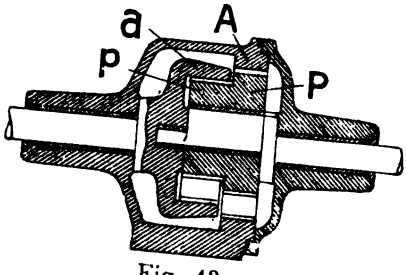

Fig. 43.

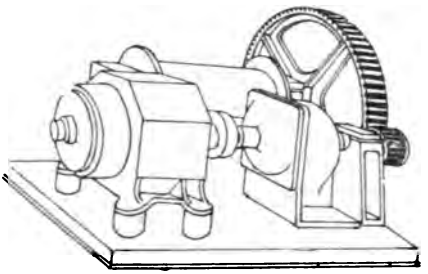

Fig. 44.

As will be seen the planets are carried upon a crank pin attached to a disc at the end of the high speed shaft, the larger planet P, gears with a fixed internal gear A, whilst the smaller planet p (attached to P), meshes with another internal gear a, fixed directly upon the slow speed shaft.

The dimensions of this gear are actually smaller than those of the three planet type, but the speed of meshing is very high, 2200 and 1760 feet per minute in the 2 H.P. size, reducing 25 to 1 from 1400 R.P.M.

The ratio of reduction is $R = \frac{aP}{aP - Ap}$

The cost of this gear for 30 H.P., reducing 800 to 31 R.P.M. is £58 10s. 0d.

As the action of all planetary gears depends upon one wheel being fixed, any of them may be used as a friction clutch for starting and stopping by allowing the fixed gear A, to slip under the control of a band brake. This in some cases is quite a valuable feature.

Chain Drives.

Among positive transmissions, chains probably rank second after spur wheels in number of applications. The silent chain drive is most appropriate under those conditions which exclude standard single reduction spur gear, only by reason of distance between centres, or of clearance; it is, therefore, largely in

competition with the idler spur wheel arrangement for reductions of 3, 4, or 5, but not exceeding 6 to 1. As indicated when treating of direct coupled drives, the ordinary lathe headstock is rather a difficult subject, and, as might be expected, seeing that they allow considerable latitude in the position of the motor, chains have been very commonly used for the purpose. This flexibility is, in a sense, a defect—the chain drive can be applied almost as an afterthought and, in consequence, it often is little better than a patch. Very rarely, indeed, are high speed chains adequately guarded, whereas they should properly run in an oil tight gear case and through a bath of oil.

Fig. 45 (Pond) is typical of average practice on heavy lathes, and Fig. 46 (Archdale) on light ones. It will be noted

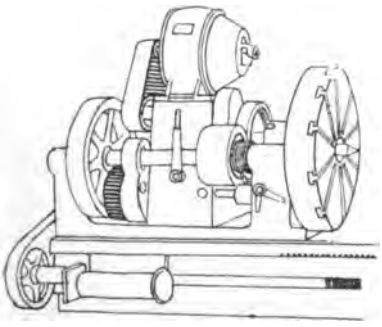

Fig. 45.

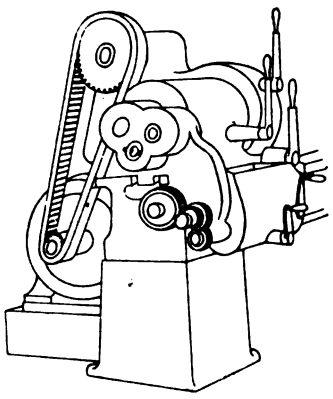

Fig. 46.

that in both cases single reduction spur gear would have met the case, but for the distance between centres. The same may be said of Fig. 47 (Bickford) a standard drive on that make of radial drill which is strictly comparable with the idler spur wheel drive, Fig. 28.

In a very different class is the portable saw bench, Fig. 48 (Ransome-Renold), than which it would be difficult to find a

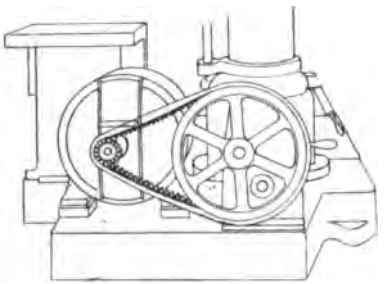

Fig. 47.

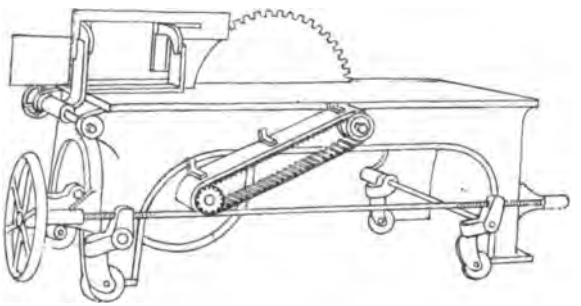

Fig. 48.

more appropriate application of the silent chain. Inspection will show that no other transmission would leave the bench so free of obstruction as to make it equally good for ripping and cross-cutting. In a portable tool all the excellencies cannot be expected, and the only objection—the somewhat inaccessible position of the motor—may, therefore, be overlooked.

Where the load is subject to repeated shock, chains do not ordinarily give good service, they "snatch" or whip. Fig. 49 is a case in point. The motor is fitted with the usual spur gear, and then there is a chain transmission on to a main shaft, from which a number of rivet making machines are belt driven. These machines are liable to work into synchronism at times, and then the chain "snatches" badly. The diffi-

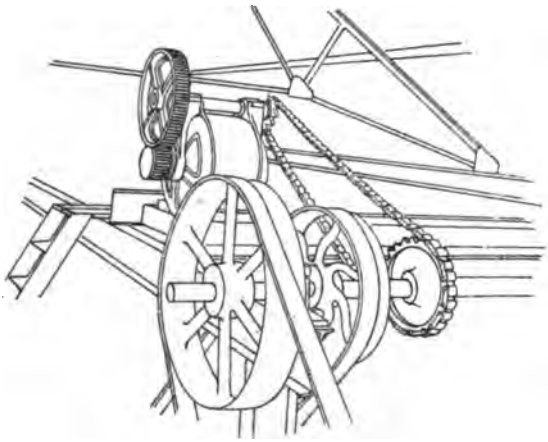

Fig. 49.

culty can be overcome by the use of the spring cushioned wheel, Fig. 50 (Link Belt) which should find a place in all

Fig. 50.

positive transmissions from constant speed motors to fly-wheel-driven variable speed machines. The absolute success of the wheel is demonstrated by Fig. 51 (Link Belt), a 90 H.P. transmission to a Root type blower. This illustration has another interest as bringing out the fact that a silent chain drive can be got into less space than the corresponding spur wheel arrangement. It would obviously be imposible to get an adequate raw hide pinion into anything like the compass of the steel chain pinion shown, and, consequently, the whole gear would take up correspondingly more room.

The Renold silent chain, which has held the field exclusively

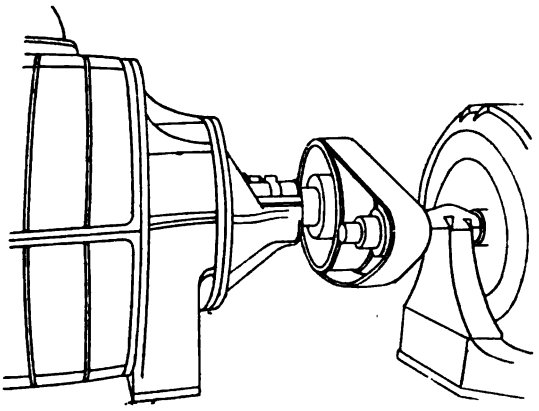

Fig. 51.

until recently, has now a competitor in the Morse rocker joint chain, whose action is shown by Fig. 52 (Westinghouse Brake

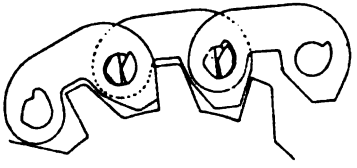

Fig. 52.

Company). It is claimed for this chain, and apparently with reason, that hinge friction is greatly reduced—the sliding of a bush and stud being replaced by the rolling of two rockers, out of which arises the possibility of running at speeds higher than that at which lubricating oil is thrown off by centrifugal action. The link form is such that the chain and wheel teeth, as in the Renold type, come together without sliding, and yet without impact, and are similarly released. Fig. 53, although not a motor gear, is shown as a fine example of heavy Morse chain transmission, 200 H.P., under limiting conditions of environment which render it peculiarly appropriate.

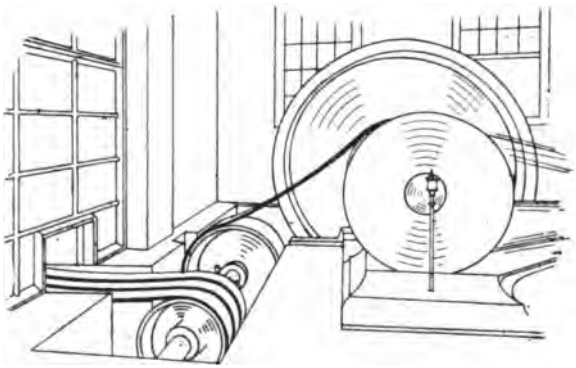

Fig. 53.

WORM GEAR DRIVES.

Much has been written about the geometry of worm gearing, but very little indeed that is helpful in determining actual dimensions for any given duty. In 1898, Mr Halsey, of "The American Machinist," and in that paper, published some highly interesting data, being a collection of dimensions and general results, but in the majority of cases without working loads. His deduction, broadly, was that all worms with a thread angle less than 9° failed, and those with an angle of 12° 30′ or more were successful, in the sense of continuing to work without cutting or excessive heating, as power transmitting gears.

From that time until last year when Mr R. A. Bruce read, before the Institution of Mechanical Engineers, his paper, "Worm Contact," which the present Author thinks is destined to become a classic, nothing of any outstanding value appears to have been published on the subject. Mr Bruce's treatment is geometrical and mathematical, but he reaches a very practical conclusion which is, that the pressure-sustaining area of contact, and, therefore, the permissible end thrust, varies directly as the diameter of the worm and as the effective breadth of wheel teeth, this is as might be expected; but also, and this is new, as the square root of the diameter of the worm

wheel, and is independent of other geometrical considerations as angle of thread.

Mr Bruce's systematic analysis should have very beneficial consequences in the standardising of worm gears, which in the past have often been most extravagantly designed. There is still, however, the widest scope for well considered experimental research on the rating of efficient worm gears and on the influence of material, (Mr Bruce's data being limited to soft steel worms), as well as on the question of parallel *versus* hollowed worms.

The so-called Hindley worm gear, Fig. 54, practically

Fig. 54.

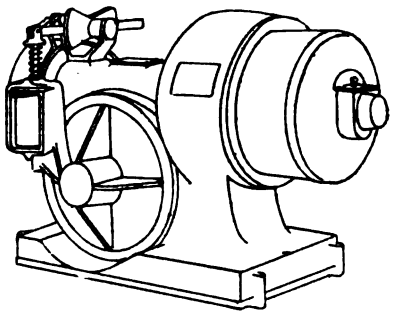

Fig. 55.

unknown in this country, is largely used in the United States. The substitution of a hollowed worm for a parallel one, without any other alteration, is definitely stated in certain cases to have converted failures into successes. If the contention that the hollow worm affords increased pressure-sustaining contact area can be maintained, and appearances are certainly in its favour, then the departure is justified, for the higher cost of the worm will be more than balanced by the higher rating of the whole gear.

Probably more worm gears are used for electric lifts and hoists than for any other single purpose, an application to which they are particularly well suited on account of compactness and noiseless operation; in many situations, too, the right angle transmission lends itself to a more favourable

general arrangement than either the straight line or parallel shaft one. Fig. 55 (Laurence, Scott) than which it would be almost impossible to conceive a more compact and purposeful disposition of motor and worm gear, or one more completely accessible, is an example of special motor construction which is justified only by a large output of duplicates, and by the saving of material over the corresponding arrangement with standard motor and standard worm gear.

Beyond considerations of space and silent running, however, the idea that worm gear is self-sustaining is at the root of its almost universal adoption for electric lifts. With this object it is, in most cases, made in a thoroughly inefficient form, a single thread worm of relatively large diameter meshing not infrequently with a cast iron wheel. When so made, and while new, it is self-sustaining, but so soon as the wheel has come to a good surface it loses this power and will quite generally run back. Depending on internal losses to facilitate stopping, the gear is accompanied by inadequate brakes and, as time goes on, it becomes increasingly difficult to stop exactly at the floor levels. All this, in the Author's opinion, is wrong. The gear should be regarded as a power transmitting mechanism, being made as efficient as possible for that purpose alone, and entirely independent brakes, adequate for their own purpose, with appropriate safety devices, should be the security for satisfactory performance and for the prevention of accidents.

Apart from electric lifts, about which there may be difference of opinion, all other worm gears should certainly be as efficient as possible. Contributing to high efficiency are—Multiple thread worm of high angle (small pitch diameter in relation to lead), steel worm hardened and ground, ball thrust bearing, phosphor bronze wheel rim running in an oil bath, and self-lubricating worm wheel shaft bearings. All these features are embodied in the gear shown by Fig. 56 (the Author) which is a combination of variable speed motor, worm

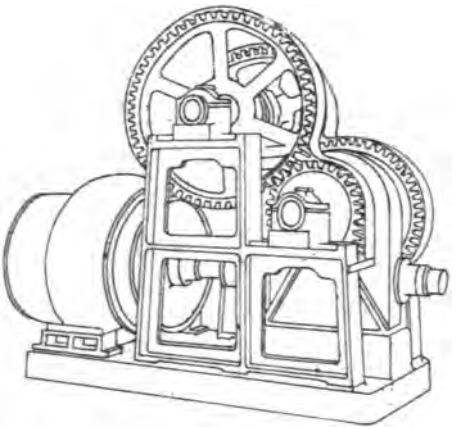

Fig. 56.

gear and alternative spur gears for a special purpose, of which 9 were installed originally and 6 subsequently, so they may be considered to have been successful. Seeing that specific data of worm gears in constant (*i.e.*, non-intermittent) use are not very plentiful, they are given for this mechanism as follows:—

Motor; 23 H.P. at 215 R.P.M. to 28 H.P. at 860 R.P.M.

Worm; triple thread, $1\frac{1}{4}$ inch pitch, $3\frac{3}{4}$ inches lead, $3\frac{3}{4}$ inches pitch diameter.

Wheel; phosphor bronze, 58 teeth, $1\frac{1}{4}$ inch pitch, $3\frac{1}{4}$ inches face, 23 inches pitch diameter.

Another constant service gear (in use for nearly ten years) of which the Author has data is:—

Motor; 14 H.P., 700 R.P.M.

Worm; double thread, $1\frac{1}{8}$ inch pitch, $2\frac{1}{4}$ inches lead, $2\frac{3}{4}$ inches pitch diameter.

Wheel; phosphor bronze, 78 teeth, $1\frac{1}{8}$ inch pitch, $2\frac{1}{2}$ inches face, 28 inches pitch diameter.

The designer of worm gears will find that in each of these successful examples the worm is of substantially smaller dimensions than are currently supposed to be necessary, the

actual end thrust being more than double the Bruce rating, even for 100° F. rise, with a soft steel worm.

The views of three prominent makers of worm gear, each quoting a 30 H.P. transmission, (10 per cent. occasional overload) reducing from 800 to 31 R.P.M. are shown below:—

	A.	B.	C.
Worm; double thread hardened and polished.	2″ pitch 4″ lead 4½″ pitch diameter.	1¾″ pitch 3½″ lead —	1¾″ pitch. 3½″ lead. —
Wheel; phosphor bronze rim, cast iron centre.	51 teeth 4½″ face 32¼″ pitch diameter.	50 teeth — 28″ pitch diameter.	49 teeth. — 27⅜″ pitch. diameter.
Price, complete -	£200.	£42.	£37.

The Author's specification for the same would be:—Worm; triple thread, 1⅝ inch pitch, 4⅛ inches lead, 4 inches pitch diameter. Wheel; phosphor bronze, 77 teeth, 1⅝ inch pitch, 3½ inches face, 33·7 inches pitch diameter: and a fair price would be, say, £55.

It will thus be seen that for a moderate reduction (25·8 to 1), good worm gear is less expensive than any of the planetary (or proprietary) gears for the same duty.

Variable Speed Drives.

In the great majority of cases, the requirements of variable speed can be satisfactorily met, without extravagant capital outlay, by a 3 to 1 speed range compensated direct current shunt motor, with or without additional change gearing. (There are other efficient electrical methods of obtaining variable speed with direct current motors, but these do not fall within the scope of the present paper). On a polyphase supply there is no efficient method of obtaining a continuous variation of motor speed, and all changes must be mechanically provided.

There is on the market, but not yet in extensive use, a very interesting, true variable speed gear. The interest arises from

two causes: it is, so far as the Author knows, the only positive variable speed gear in existence, and it is on exactly the lines that everyone first sketches out and then abandons as hopeless for the purpose.

The principle of the Newman gear is shown diagrammatically by Fig. 57 (Johnson & Phillips). On the end of the con-

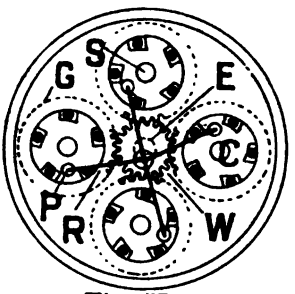

Fig. 57.

stant speed driving shaft a variable-throw eccentric of path E is fixed. This is not attached to, and is not in the same plane as, the driven wheel W. Connected to the variable eccentric E, are four arms or rods R, driving on to pins P, in the silent roller clutches C. Each of the four clutches oscillates on a stud S, fixed in the casing, and is surrounded by a gear wheel G. The four gears mesh with the common driven wheel W, fixed on the variable speed shaft. The action will be perfectly apparent, and it need only be mentioned that before one clutch has released, the next clutch has taken up the driving, and, therefore, the motion of the variable speed shaft is continuous. The ratio of reduction is from infinity downwards, *i.e.*, with constant speed on the primary shaft, the secondary one may be stopped altogether, or run at any speed up to the highest, which is usually about one-third or one-fourth of the constant speed.

This device has been running for a long time on the

Inventor's motor car, and for shorter periods on other applications, one being of 50 H.P. capacity. If it will stand constant use it should prove of very considerable service.

SUMMARY.

Motor Location.

The motor should be placed well above the floor level, so as to be inspected and cleaned easily, without crawling or lying down; it is a less serious fault to be too high than too low. On the other hand, the height above base should not be such as to induce vibration. All good motor armatures are symmetrically built except as regards keying details; most are in fair static balance, but no standard motors are dynamically balanced, hence only slow speed machines are safe high up. Generally, motors should not be placed on top of any machine or tool unless it is rooted, so to speak, to the ground (Figs. 12, 26, 27, and 45). If the machine stands on a stool or cabinet pedestal (Fig. 11), it is not a good subject for a motor so placed. The motor should not take up, or prevent from being otherwise used, more floor space than its own area. All standard motors may equally well be fixed to a horizontal, inclined or vertical surface, the inverted position (ceiling) is not a particularly good one.

Direct Coupled Drives.

Direct coupled drives are to be preferred to all others whenever practicable. They frequently involve a somewhat more costly motor, occasionally a less costly one; but, always economising in current consumption, their adoption becomes more advantageous as the period of operation is lengthened. Imperfection of alignment is not a bar to direct connection. There are flexible couplings admitting of slight deflection from the straight line, and others suitable for coupling non-intersecting shafts separated by a short and variable distance between centre lines.

Belt Drives.

Apart from their general application, which need not be discussed, belt drives are to be preferred to any form of strictly positive connection between constant speed motors and fly-wheel operated machinery. A belt drive should not be accepted, as the transmission from an electric motor, on any new tool of the heavy manufacturing (as distinguished from the jobbing) class.

Fly-wheel Drives.

A fly-wheel is quite useless with a constant speed motor positively connected to its load. Its utility can be partially restored by a flexible (spring-cushioned) coupling between the motor and the consuming device. Where the full advantage of a fly-wheel is desired, the motor should have the speed characteristics of an over-compounded direct current machine, the speed falling, say, 25 per cent. between no load and full load.

Single Reduction Spur Gear Drives.

Single reduction spur gear (raw hide pinion and cast iron wheel), admitting of the use of normal speed motors, and regularly purchasable with the motor, is to be regarded as the standard gear transmission for ratios up to 5 or 6, and, in extreme cases, with specially heavy wheel patterns, 7 to 1.

Idler Spur Gear Drives.

The idler gear (cast iron pinion, raw hide idler and cast iron wheel), is a substitute for plain S.R. gear when the distance between centres is too great for the latter. With a steel pinion it may be used for ratios up to 9 to 1. The idler spur transmission is to be preferred to a chain drive (unless with spring wheel), if the load is highly irregular.

Chain Drives.

Chain gear is ordinarily applicable under the same conditions

as the last named but only for ratios up to 5 or 6 to 1. In addition the silent chain is advantageously employed—(a) where the distance between centres is less than, or may be reduced below, that necessary for spur gear; and (b) where sufficiently large pulleys cannot be used for belt driving. The chain speed should not exceed 1200 feet per minute.

Double Reduction Spur Gear Drives.

For ratios up to about 30 to 1, and where space is not of much account, double reduction spur gear is applicable. Where space is limited the special straight line form (Fig. 37) is appropriate.

Treble Reduction Spur Gear Drives.

As treble reduction spur gear necessarily takes up much space, and is costly, it should never be decided upon without at least considering possible alternatives. It is applicable for reductions between, say, 40 and 150 to 1.

Planetary Gear Drives.

Where extreme compactness with total enclosure of the mechanism is desirable one or other of the planetary gears may be used; simple for reductions up to 20 to 1, and compound for very high reductions.

Worm Gear Drives.

Where silent running free from vibration is desired, where total enclosure is an advantage, and where a right angle transmission is permissible, there is nothing to equal worm gear. The efficiency for moderate reductions may be high and the cost lower than that of special gears. Worm gear should not ordinarily be employed for reductions less than 10 or 12 to 1. At 15 or 20 to 1 it shows to best advantage in respect of combined efficiency and dimensions or cost; above 25 or 30 to 1, either efficiency or cost must be sacrificed in comparison with other transmissions.

In conclusion the Author desires to acknowledge his indebtedness, not alone to those firms whose productions have been favourably commented on—they have their reward—but also to those who sent matter which either could not be used, or which being used as finger posts to point a warning, could not well be acknowledged. Also he acknowledges the painstaking care with which his assistant, Mr A. W. Jones, prepared the wall diagrams and worked out the general formulæ for speed reduction of compound planetary gears.

Discussion.

Mr Henry A. Mavor (Member) complimented the Author on the group of perspective diagrams illustrating his paper. He pointed out that the question of gearing transmissions from electric motors had not many new or special elements in it, but was the ordinary problem of mechanical transmission with the addition of practically one step of gear; the speeds of electric motors bearing such relation to the ordinary mechanical speeds formerly in use that, one pair of gear wheels was sufficient to bring the motor speed within the range of ordinary practice. He took exception to the Author's treatment of the question of fly-wheels and the arrangement of motors for intermittent work such as punching and shearing and beam bending machines, pointing out that the question was not to be settled by mere general statements, and required a much more exhaustive treatment than the casual treatment given to it in the paper. He had asked Mr Hird to prepare a set of curves illustrating the action of shunt and compound motors driving shipyard tools, and referred to him for an exposition of the curves. He disagreed with the Author as to the non-applicability of polyphase motors to shipyard tools. He considered that the experience on the East Coast of England completely justified the use of such motors. Experience also justified the prevalent use of shunt wound motors in preference to compound wound motors for the work

indicated. Instead of being disadvantageous they had points of distinct advantage for such purposes.

Mr. W. B. HIRD (Glasgow) observed that he would confine himself strictly to the description of the curves

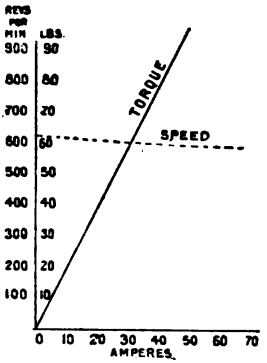

Fig. 58.—Characteristics of shunt wound motor.

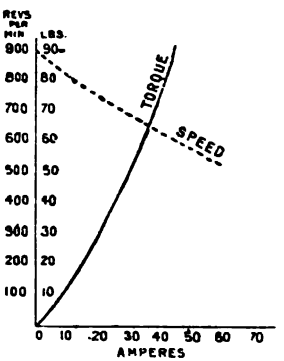

Fig. 59.—Characteristics of compound wound motor.

which Mr. Mavor had mentioned. On the blackboard would be seen two curves, Figs. 58 and 59, labelled shunt and compound respectively, and these were the characteristics of the two motors. Given a shunt motor or a compound motor, it was quite easy by experiment to find

Mr W. B. Hird.

what torque it gave, and at what speed it ran, with any number of amperes passing through it; alternatively these could be calculated with a fair amount of accuracy, and for the present purpose the speeds and torque characteristics of two motors were assumed to be as given in the figures. Given these characteristics, one could proceed by applying the method which was in frequent use in electric railway practice, a method for finding from the torque the speed and acceleration at any time, and from this could be found the time required to pass from any given velocity to any other given velocity, given the mass which had to be accelerated. He did not know that it was necessary to detail the process, but it came to this, that the time required for passing from one velocity v_1 to another v_2 was equal to $M\int_{v_2}^{v_1} \frac{1}{F}\,dv$ where M was the mass, and F the force acting on it. In this case all the forces were known; the torque of the motor could be taken from its characteristic curve, there was also the resistance due to friction of the machinery, and when the shear began there was, in addition, the resistance to shearing. From these two curves so drawn, he had plotted the curves given in Case 1, Fig. 60, and Case 2, Fig. 61. Case 1 was that of a machine which would have a fly-wheel effect, equivalent to a fly-wheel of about 1 ton running at 300 R.P.M. The blow had been taken in actual shearing and punching at 100 tons, and it was supposed to act for one second, the whole period of the stroke being three seconds. For two seconds it was rising for the next shear. Under these conditions, in Case 1 was plotted the speed of the shunt motor at any time, and also the speed of the compound motor, both shown dotted. From this speed curve it was easy to plot a curve of the current taken at any time by the motor. From the characteristic curve of the motor, and for any

speed, would be found the corresponding current. The shunt speed was practically constant. The compound speed curve dropped from 700 on the diagram down to about 650, and if the diagram had been carried far enough, the speed of the compound and of the shunt motor would have come down to the same mean speed. During the whole of the

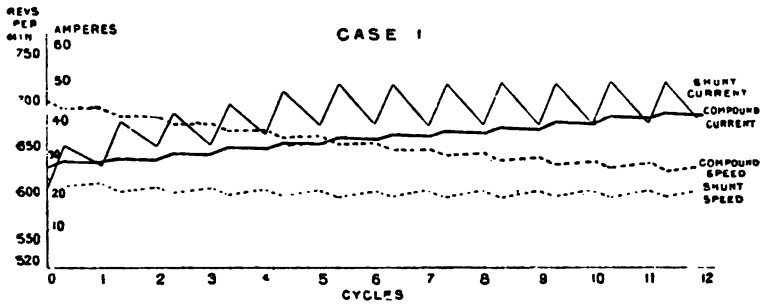

Fig. 60.

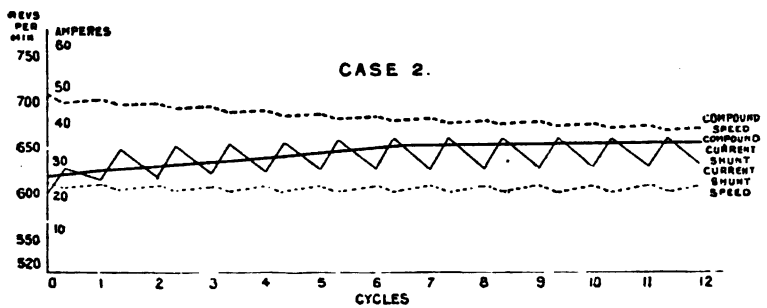

Fig. 61.

period shown in that diagram, it was the fly-wheel that was doing part of the work. Cases had occurred where the compound wound motor put in to do heavy work had run at such an excessive speed, when not actually shearing, as to make it difficult to handle the material and get it in between the shears in time for the next blow. The characteristics in Case 2 were very similar, although they were not so marked, and

Mr W. B. Hird.
that was a case in which the same two motors were supposed to drive a punching and shearing machine with a fly-wheel, which was such that the fly-wheel effect was only a quarter of that in Case 1, while the force required to shear was also reduced to one quarter of what it was in Case 1, but the characteristics were very similar. Whilst it was not contended but that in many cases the compound wound motor was the most suitable for driving tools with a heavy fly-wheel, nevertheless these curves showed that the variation in the current of a shunt motor was not so excessive as to make it absurd to use such a motor, as a matter of fact shunt wound motors could be designed perfectly well to meet such fluctuations of current. On the other hand, cases did arise when the variations of speed of the compound wound motor introduced difficulties in the working of the tool.

Mr R. A. Bruce (Leeds) said he must thank the Chairman for the great courtesy that had been extended to him in allowing him, although a perfect stranger, to offer a few remarks on the subject of the paper now before them. The Author had mentioned at some length the case of worm gearing, and he wished to devote his remarks mainly to that aspect of the paper, because it was with that part of the subject that he was, perhaps, most familiar, and it was a subject which he thought would have an increasing interest for all the members. The case in favour of worm gear had not yet been fully stated, and a great many prejudices existed in the minds of eminent practical engineers on this question which had yet to be dissipated, and shown to be prejudices rather than well-grounded opinions. The Author had said amongst his general conclusions that for silence, protection, efficiency and low prime cost, when the speed ratio lay between 25 to 1 and 10 to 1, worm gearing was unrivalled. He feared that a great many engineers of large experience would demur to that, and one could not, without good and sufficient warrant, afford to flout experience of that kind. The cause

of such misgivings required investigation. In the first place, it had only been within the last five or six years that the commercial production of worm wheels had been of that accurate order which was requisite for producing an effective pair of gears. A worm gear that was inaccurate was perfectly useless, because the success of such gearing depended upon perfect accuracy as to shape of worm and wheel, perfect accuracy of alignment or erection, and proper provision for taking the end thrust of the worm. Great attention must also be paid to the proper choice of the angle of the thread of the worm, and, lastly, there must be proper provision for securing sufficient wearing surface. The first of these conditions had only been met within the last five or six years in a commercial sense. It was now possible to produce a worm wheel for the same cost as it was to produce a spur wheel, bulk for bulk. If one took wheels having the same number of teeth and the same pitch, it was quite possible to produce a worm wheel as cheaply as a spur wheel, but he did not say it would be found that the same prices were charged, because in the case of worm wheels the demand was greater than the supply. With regard to accuracy of alignment, that was one of those matters of detail that had often escaped engineers, inasmuch as they thought that if they had something very beautifully cut it would run well no matter how it was erected. It was very necessary to pay great attention to the accuracy of alignment, since continuity of contact depended on it. With regard to proper provision for lubricating the surfaces which came into contact, there was a certain heating tendency always taking place, and it was not sufficient to provide a small stream of oil or grease, but it was necessary to supply a very large volume of liquid or solid lubricant so as to give it an opportunity of dissipating heat by imparting it to large metallic surfaces which would first absorb and then radiate the heat. Proper provision for taking the end thrust of the worm was adequately met by a ball bearing. The proper

Mr R. A. Bruce.
choice of the angle of thread was perhaps the most important of all the items that he had mentioned, as on that proper choice the efficiency altogether depended. Speaking generally, up to angles of 45 degrees, which were almost impracticable as the thread angles of worm gears, the theoretical efficiency increased as the angle increased, this increase being rapid as the angle increased from 10 degrees upwards, and then followed a curve somewhat similar to a sine curve but with a maximum at 45 degrees instead of 90 degrees as in the sine curve. The proper provision of sufficient wearing surface depended upon the choice of the proper diameters of the two gears. He might say that he had laid down these points in rather a didactic manner, but they had been arrived at from theoretical reasoning confirmed by observation. The firm with which he was connected, Messrs Joshua Buckton & Company, of Leeds, had perhaps supplied the largest example of a worm wheel drive in the world, in the case of a very large lathe for turning guns. The transmission had been from a 100 horse power motor, the motor driving through intermediate spur gearing directly to twin worms and wheels mounted on the spindle of the lathe. The material of the worm wheels was cast iron and a compensating arrangement had been applied. Under those conditions it had been possible to remove 1¼ tons of hard gun steel per hour. The rate of cutting was maintained for five hours. That was a very practical example of what could be done by worm driving. The diameter of the worm at the pitch line was about 10 inches, and when subject to the maximum cut, the load thrown on these worms was 25 tons, which was remarkable in view of the fact that, theoretically the surface in contact was only expanded into a physical area of contact by compression and by the sustaining force of the lubricant. The rating of these worms according to the values that he had enunciated in a paper read before the Mechanical Engineers last year, was three times that of a soft worm. It was quite a deliberate opinion

after the construction of a large number of worm gears that a gun metal wheel had no advantage at all. He thought there was nothing like cast iron wheels with hardened and ground steel worms meshing with them. He thought these were the two surfaces which gave the greatest possible sustaining powers. The nature of the surface ought, strictly speaking, to have nothing to do with the matter, which view would be a justifiable one except for the fact that there must occasionally or accidentally be metallic contact. He did not think there were any two surfaces better adapted to resist abrasion than hardened steel on cast iron, and that was the reason for choosing these two materials. No mention had been made in the paper of what might be called "spiral gearing," using that term not in the ordinary sense of two screws cut on cylinders with their axes at right angles, but that class of spiral gearing which consisted of a screw worm or pinion with a thread angle of from 30 degrees to 50 degrees engaging with a spur wheel or rack, the angle of inclination of the shafts or of the shaft to the travel of the rack being equal to the angle of thread of the spiral worm. That form of gearing was originally due to Messrs Sellars of Philadelphia. A very careful series of experiments was made by them to determine the efficiency of this class of gearing. He might say that it was possible to obtain an efficiency of from 97 to 98 per cent. The experiments were of the highest order. They were made by Messrs Sellars, who were celebrated for their testing machines and for their measuring appliances, and they spared no pains to make the experiments reliable. The spiral worm and pinion gave great advantages, and one of these was that it was very useful for transmissions, for rates of reduction of 6 or 8 to 1. A spiral drive might, therefore, be substituted instead of a spur gear drive, and the efficiency was slightly better than that of the best worm drive, whilst the advantage of silence and smoothness was obtained. Unfortunately, it was an exceedingly difficult gear to make. The design of the

Mr R. A. Bruce.
thread was a matter of extreme complexity. No text books contained any information on the subject, and even Rankine had perpetrated errors, which, although they were excusable at his time of writing were no longer tolerable now. The question had been solved, however, by the speaker's firm, and a gear of great efficiency had resulted. An application of special interest was the all spiral gear drive which had been so largely used by Messrs Joshua Buckton & Co., for the transmission gear of planing machines. Upon the driving shaft was mounted a spiral pinion engaging with a spur wheel keyed upon a shaft inclined at an angle to the former, carrying at its other extremity a second spiral pinion which engaged direct with the rack of the reciprocating table of the planing machine. This combination had lately been extended to drives in conjunction with a reversible motor, and it was especially suitable for this purpose on account of the fewness of the rotating parts, which had to be retarded and reaccelerated at each reversal of the stroke. As such motors were now made to give at will either a variable cutting speed with constant quick return, or, with equal speeds in both directions through the same range of speed, a very desirable combination was accomplished, namely, a planing machine which was equally suitable for double cutting or for cutting in a single direction with a quick idle return stroke. As an example of this kind of combination, it was possible to obtain a machine which could have equal cutting speeds in both directions at any speed determined by the position of the shunt regulator handle, varying between, say, 25 to 60 strokes per minute, or by throwing over a small switch the machine could be converted into a machine capable of the same variation of speed during the cutting stroke, but with a constant quick return speed of 100 strokes per minute. In conjunction with the double cutting toolholders designed and made by the speaker's firm, this was in some respects an ideal combination. In Fig. 5 an example had been given of a drive of a recipro-

cating tool, and some of the difficulties of applying the motor had been dwelt upon. It was a very difficult question, because there were natural difficulties which increased with the speed. In any form of reciprocating tools there was a large amount of kinetic energy which had to be absorbed and redeveloped. That had been a great source of difficulty with regard to the application of motors and the driving of reciprocating tools. The kick of the ammeter needle at the point of reversal of a planing machine was notorious. An attempt had been made to deal with the problem by a system of clutches and fly-wheels which had the effect of disguising or palliating the worst symptoms, but it might interest those present to learn that a real and radical attempt had been successfully made to cope with that difficulty. As in the case of all radical measures, the device adopted was a very simple one. The idea was to have a large spring capable of absorbing a large amount of energy, in fact, large enough to actually absorb the whole energy of the parts that moved and had to be reversed, and restore the energy (which would otherwise be wasted) during the moments of acceleration. The problem was not an easy one, because they had to accommodate a variation in the stroke of the machine, and great pains had to be taken to co-ordinate the moment of reversal of the motive power with the moment of absorption and restoration of the energy by the spring. These periods had to be timed very exactly, and in the case of a belt driven machine it was a very difficult problem to co-ordinate the exact moment of shifting the belt and the moment of compression of the spring. The problem had been solved successfully by the speaker's firm. That day he had been looking at a machine, made by his firm, which contained the features described, and which was installed in this district, and he hoped that in a short time there might be an opportunity for the members of the Institution seeing the machine in question. He hoped when they did see it that they would recognise that a very complete method of meeting this

Mr R. A. Bruce.
very difficult problem had been designed. He was afraid that he had troubled the meeting with a somewhat partial view of the paper, for which he could hardly express sufficient admiration and gratitude. He did not think it was essential that such a paper should be so rigidly correct throughout its length as to contain no errors, but it was important that it should provide opportunities for discussion and food for thought. If it contained a small modicum of error, it might be more useful than a paper of less suggestive character, but which was quite free from mistakes. The present paper was most suggestive, and he for one felt greatly indebted to its Author.

Mr R. A. McLaren (Member) remarked that he had intended to congratulate Mr Spence on the way in which he had dealt with the fly-wheel question, and it came as rather a shock to him when he heard such an authority as Mr Mavor uphold the use of a fly-wheel applied to a motor running at a constant speed.

Mr Mavor—No, no.

Mr McLaren—He had listened very carefully to what Mr Mavor and Mr Hird had said, and it seemed to him that their arguments boiled down to the fact that a fly-wheel was of no use. The only way in which one could get anything out of a fly-wheel was by its variations in speed. If the rim of a fly-wheel revolved at a certain velocity, and the periphery of the motor pulley was running at a different velocity, it seemed to him obvious that there must be a serious loss of energy, and, in addition to that, great wear on the belt, owing to the fact that it was slipping. He had no doubt that Mr Spence would reply to Mr Mavor better than he could do, but certainly he felt that he would like to express his views on that point. Apart, however, from cases where a fly-wheel was wanted, he did not think that the positive attachment of a motor to a machine tool was altogether desirable. In his practice he avoided it as far as possible. Take the case of the radial drill shown in Fig. 9. What was going to happen if the drill stuck

in the hole? That was not an unlikely thing or an uncommon thing to occur, and if it did, it seemed to him that there was nothing for it but a smash.

Mr SPENCE—The fuse would go.

Mr MCLAREN—The fuse might be expected to go, but one could not stop the armature instantly, and its momentum would cause the weakest part of the mechanism to fail. The same thing applied to any tool that was positively connected to its motor. He thought it was better to group tools and to drive them with a counter shaft and belts. Then, in the case of an accident, the belt slipped and there was an end of the matter. Mr Spence gave a formula for the ratio of the width of face in spur gears, but he thought the ratio recommended erred on the side of liberality. He did not say that it was a bad thing, but he said that it was an unnecessarily costly thing. The old millwrights, to whom Mr Spence referred, worked with moulded teeth, and if a ratio of 3 to 1 was sufficient in their day, surely a less ratio, if anything, should be sufficient now with machine cut teeth. As a matter of fact a ratio of 3 or 3½ to 1 with properly cut wheels would give a drive silent enough for all practical purposes. The wider gear cost much more, because the cost of cutting the gear varied almost directly with the width of the face. While on the question of cost, he would like to refer to the internal gear that Mr Spence showed on page 225. These gears were very compact, but they had the defect that the cost of cutting them was at least four times that of cutting outside gears, for the reason that they could not be cut on a modern hobbing machine, but only with a single cutter.

Mr BRUCE—Yes, they can.

Mr MCLAREN—I should be very glad to know how to do it.

Mr BRUCE—I will show you.

Mr MCLAREN referred to the three designs of belt driven saws on page 199. The design illustrated by Fig. 1 had a weak point, inasmuch as the saw and its frame was suspended from

Mr R. A. McLaren.
a shaft which was constantly rotating—the motor shaft—the bearings consequently had to be well lubricated and even then were difficult to keep cool. Regarding the design Fig. 2, Mr Spence said that the belt tension was increased as the saw was brought up to its work and relieved when not cutting, but he could not understand this. It appeared to him that, as the axis of the saw frame was below that of the motor, the saw pulley would be brought nearer to the motor pulley as the saw frame was swung forward, and, consequently, the belt tension would be relieved instead of being increased as the saw was brought up to its work. Even if this were not so, the design was not a good one, as it was not reasonable to expect the operator to place the hot material to be sawn at exactly the right distance away from the saw, to ensure the correct tension at the beginning of the cut. Even if this were done, when the cut was a wide one, the belt would be too tight by the time the cut was completed, and would cause excessive friction and loss of energy. The design, Fig. 3, was free from the defects he had alluded to in the other two, and in his opinion had many advantages other than that of balancing the weight of the saw frame.

Mr John Barr (Member) asked if Mr Spence had any worm gear applied to pumps, and if so would he make any special allowance for shocks that came upon the worm gear when driving pumps—also what was the most powerful worm gear that he had constructed, and what did he consider the best ratio of speed? Mr Spence stated at the end of the paper that a suitable ratio was anything from 30 to about 10, and perhaps 20 would be about the best: But what was the largest power that he had tried for these worm gears? Further, he would like to ask whether, in Mr Spence's experience, it was better to have the pinion on the end of the motor shaft overhung without any outer bearing. It would almost seem to one that a motor giving out about 50 horse-power and running about 700 revolutions per minute would be the better of a bearing

Mr John Barr.

outside the pinion. He observed none were shown in the paper with an outer bearing, and he would like the Author's opinion on the matter, and, also, whether he had any extended experience of raw hide pinions doing such work as driving pumps, and whether they lasted well with the shocks that came upon the pumping machinery, and whether, under such circumstances, they were considered satisfactory.

Mr A. H. KELSALL said that he had no intention of criticising the paper, because as an outsider he was in a different position from a member, but in view of the possibility that the diagrams shown by Mr Mavor might not be available again, he would like to get additional elucidation from him. The point which particularly puzzled him was that although the current curve of the shunt wound motor was wholly above that of the compound wound motor, so that its ampere-seconds area was visibly greater, it attained exactly the same result. One could not follow the connection between them. The punch was shown in each case making one stroke every three seconds, and it was not explained where all the surplus power in the case of the shunt wound motor went to. It seemed to be represented by quite a large area. Moreover, the compound motor seemed to make no attempt to regain its speed after it dropped in speed; each stroke of the tool was represented on the compound motor's speed curve by a dropping portion followed by a flat portion. The total effect, although absorbing 30 amperes, was that it was steadily dropping in speed, and it looked as if the motor was quite inadequate for the work. It had taken some ten strokes, and steadily dropped in speed throughout the whole of them. It did not seem a typical case, and his impression was that if it were offered to any of the shipyard managers he knew, the motor would have a very rough time of it, because ten strokes would certainly not satisfy them. They expected some thirty or forty. He thought the solution of the matter was that the shunt wound motor's current curve was not shown fluctuating

Mr A. H. Kelsall.

as much as it would in practice, and Mr Mavor had admitted that he had not been able to get a satisfactory recorder diagram. Possibly Mr Mavor or Mr Hird would give further information regarding the matter.

Mr R. T. NAPIER (Member) remarked that he also had looked for some reference in the paper to friction gear drives. Some years ago Robertson's friction gear was thought a good deal of, and as the inventor was, in his day, a well-known member of the Institution, it would be interesting to know if this gear was still in use. Regarding chain gearing, he had noticed that in some motor cycles the chain ran at something like half the speed of the cycle, say, 2000 feet per minute for the chain. He would like to hear what the Author had to say regarding the limiting speed at which chains could be run.

Mr ANDREW SPROUL (Member) said that on page 198 the Author quoted from Mr C. M. Percy's book, "The Mechanical Equipment of Collieries," and emphasised his remarks by saying, "This is, of course, sheer nonsense." He would like Mr Spence to point out where the nonsense was in the quotation. He was not speaking for himself, but for the younger members who would have greater difficulty than he had in seeing what was awanting; and Mr Spence would do a duty to himself after having made that remark if he would explain what he meant by calling it sheer nonsense. He would be glad if Mr Spence would explain the Table on page 220 more fully. It was given in such a blank sort of way that one could not make head or tail of it and he thought the expression at the top of the two last columns really referred to the horse power. If that was the intention, then, dealing with column 4—

Let P = pitch in inches,
B = breadth of face of wheel in inches,
S = the speed of pitch line in feet per minute.

$$\text{H.P.} = \frac{1 + 1 + 4{\cdot}5'' + 0}{1000} = \begin{cases} \cdot 0035, \text{ not } 149, \text{ as given all down} \\ \text{the column.} \end{cases}$$

Then in Column 5:—

$$\text{H.P.} = \frac{D + p + b + N}{1000}.$$

D, being diameter of pitch line in inches, - - - $= 4\frac{1}{8}''$
p, one inch of pitch, - - - - - - - $= 1''$
b, breadth of face in inches, - - - - - - $= 4\frac{1}{2}''$
N, number of revolutions in inches, - - - - $= 0$

$$\therefore \frac{4{\cdot}125 + 1 + 4{\cdot}5}{1000} = \begin{cases} {\cdot}01856, \text{ not } 565, \text{ as given all down} \\ \text{he column.} \end{cases}$$

Neither case gave Mr Spence's result in line one at no velocity, and, further, there was no change of power for higher velocities. And, to use a steelmaker's phrase, this was "double sheer nonsense," and a blemish on the pages of their transactions. The figures conveyed practically nothing, and if meant as a fling at the old millwrights' way of doing things compared with the Author's method, then let them have that of the old millwrights. All were indebted to such old millwrights as Fairbairn, Nasmyth, and others, and he hoped Mr Spence would make his meaning clear to the members. A previous speaker had made some remarks about Mr Spence's liberal width of faces for wheels, six times the circular pitch, and he was quite at one with that speaker. With a pitch of 2 inches Mr Spence would advise a face of 12 inches, when the half of it was ample. A difficulty arose in making very broad wheels, even with the refined wheel-cutting arrangements of to-day. Alignment was more difficult to obtain, and it sometimes happened with broad faces not in perfect line, the contact being at one end, that corners were broken off. People who had had experience with gearing often found the pinion well worn, and ground away to one-fourth of its original thickness, yet doing its work, the contact being perfect as the result of wear. Assuming a gear of 4 to 1, the wheel in such a case would wear out 4 pinions and still be capable of performing its work. He thought Mr Spence conveyed the idea some-

Mr Andrew Sproul.
where in his paper that by making wheels very large and meshing them together they would have more teeth in contact. With large wheels and short teeth there would be a good many teeth in apparent contact, but he questioned very much if the very best pair of wheels had ever more than two teeth in contact at one time. In the Table already referred to, Mr. Spence made mention of pinions with 13 teeth for good work. Thirteen was too few; not less than 14 should be used. The rolling circle usually adopted of about 2¼ pitches in diameter on an inch pitch would be equal to the radius of a pinion of 14 teeth. The flanks would then be radial lines, only the part of the tooth above the pitch line being curved, and consequently weak, necessitating the teeth of the pinions to be shrouded to maintain their strength. The Hollick motor drive, illustrated by Mr Lackie, was thought one of the finest applications for the purpose. He had seen it in use for cranes, etc., and had some experience of it, and to his knowledge it had been working well for 12 or 14 years with satisfaction. He thought Mr Spence gave himself away in bringing forward the Hindley worm gear, Fig. 54. He would never advise one to put in a hollowed out worm, but to use one the same diameter throughout its length. The so-called Hindley worm was not only a very old notion, but it was contrary to good practice, in so far that, the ends being considerably larger than the centre, on small diameter worm wheels, the ends had a much less angle of thread than at the centre, in consequence of which there was an impossibility to work in unison. He had read Mr. Bruce's paper on Worm Gears with great pleasure. Hobbing worm wheels was an advantage, as it tended to produce good, smooth running, provided the hob had not to control the turning of the worm wheel during the cutting process. It was very questionable if any great advantage was derived from the use of hollow-faced worm wheels, as the points being carried up the worm higher caused them to be thinned off owing to the increase due to the larger diameter, and having

the same number of teeth as the lesser and true pitch diameter, the pitch was greater than the true pitch, and was simply an inversion of the errors of the so-called Hindley worm already referred to. Such devices were only deceptions to the common notion that increased bearing surface was obtained. The apparent bearing surface was caused by a translation of the point of contact between the worm and the wheel, or a cross-rubbing action added to that due to the rotating of the worm. Mr Spence remarked that a worm gear of 90 per cent. efficiency was 90 per cent. either way, and would run back, and this was perhaps what was in his mind when he called the quotation from Mr C. M. Percy's book "sheer nonsense." It must be borne in mind, however, that a worm to fulfil such conditions must have a pitch equal to the circumference of the pitch diameter of the worm, but the author of the quotation referred to was alluding to single-threaded worms, with a pitch of one-third or one-fourth the circumference of the pitch diameter of the worm—when it would not be a reversible device, and would not run back—and the author of the quotation was quite correct. The question of worm gear efficiencies was very much a question of pressure at the point of contact of worm and worm wheel, which could not be large in any case. From the designers' standpoint it was desirable to keep this contact as low as possible from pressure, by having a moderate reduction by the worm gear, supplemented by a train of ordinary spur gearing, according to the conditions to be fulfilled. Plain-faced worm wheels were much cheaper to produce and with good designing of the gearing application quite as satisfactory results could be obtained.

Correspondence.

Mr W. W. Lackie (Member of Council) wrote that being interested in the supply of energy for the driving of electric motors, he had consequently read Mr Spence's paper with great interest, and wished to thank him for the very useful

Mr W. W. Lackie.

and practical examples of electric driving which he had given. It seemed to him that the great lesson to be taken from the paper was that the key to the proper use of electric motors for driving was subdivision. Throughout the paper one could see the principle enforced of one motor one machine, and undoubtedly the correct way of applying electricity to the driving of works was to abolish shafting as far as possible and put a motor on to each tool. If this was done he was sure that economy would be found not only in the total amount of power required, but in the annual cost of running even with electricity at 1d. per H.P. hour, or 1½d. per unit. In one of the Corporation Electricity Works there was a very nice reducing gear known as the Hollick gear, interposed between the motor and the air pumps on the condensing plant which gave an almost silent gear. If, on page 224 of the paper the middle pulley of the three (the one marked R.H. Idler) were considered as being connected to the motor, and that the distance between the two outside pulleys was not great enough to allow the three pulley centres to be in line, and that a belt was put round the two outside pulleys—the motor pulley, *i.e.*, the centre one, was the smallest and was not touched by the belt

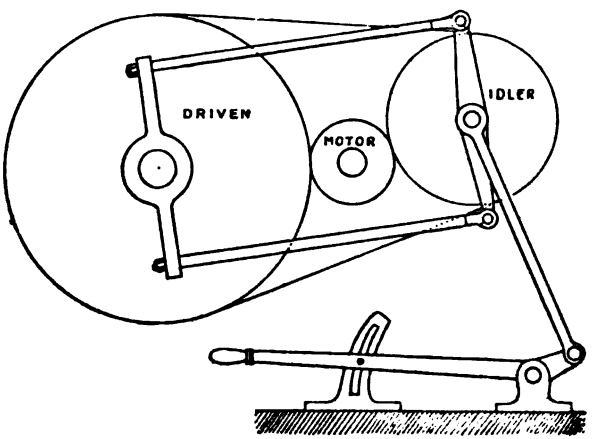

Fig. 62.

—it would be found that the rotation of the three pulleys when touching was in order. If now, by means of a lever, Fig. 62, the large pulley could be pulled down so that its centre tended to be in line with the two other pulleys, a very strong and simple reducing gear was obtained with a double friction and belt drive. This arrangement had worked admirably and with very little wear and tear during the eight years that it had been in operation. As a gear it had the further advantage that the motor could be started up at no load and the gearing gradually put into service. All the new pumps in the Electricity Works now, however, had ordinary spur and pinion drives and they all worked admirably. He trusted that the paper would serve to convince engineers that electric motors could be used economically for driving under practically all conditions.

Dr Max Breslauer (Berlin) ventured to select, out of the numerous interesting devices produced in this valuable paper, one or two points which he would like to have further explained by the Author. On page 227, Fig. 34, the Author described a new electro-magnetic friction clutch reversing gear for a planing machine, giving a most favourable solution for a problem of highest importance in the field of machine tool driving. It did away, once for all, with the abnormal current consumption, inevitably connected with the necessity of motor reversal and, on the other hand, saved the trouble and expense connected with the usual arrangement of the belt gliding from one pulley to the other. Now, the question he would like explained by the Author was: Why this device should not be applicable also to polyphase and single phase current motors? The reason would not lie in the difficulty to control the electromagnetic clutch by alternating current, because good clutches of this sort were feasible and were also on the market, so far as he was aware. On the other hand, speaking of single phase motors, this disposition of the Author's lent itself splendidly to single phase current, since

Dr. Max Breslauer.
the motor never had to start against load, thus avoiding the trouble generally connected with this class of motor. It would be a pity if ever this fine arrangement should be, in an individual case, rejected through a misunderstanding, because the current available in this instance was not continuous current. There was, further, much recent interest attached to self contained reducing gears as mentioned on page 229, Fig. 37, Now, such gears could, perhaps, be used with advantage if they would allow the motor to be built with very high speed, such as could be reached safely with compensated motors. His question, therefore, was whether, in the Author's opinion, a speed for a 30 H.P. motor, of, say, 1500 R.P.M., would be admissible? If so, a cheaper combination could be found in many cases and part of the lost efficiency in the gear could be regained through the improved efficiency of the high speed motors. The same question after the highest admissible speed applied also to the device represented in Fig. 39.

Mr J. MacEwan Ross (Member) observed that there were many of the arrangements shown by Mr Spence which his firm had used repeatedly and with success, but the object of this contribution was to refer to Mr Spence's remarks on his (Mr Ross') own patent speed gear as illustrated by Fig. 43, hundreds of which were in constant use and were giving the most satisfactory results. Mr Spence stated that "The dimensions of this gear are actually smaller than those of the three planet type, but the speed of meshing is very high, 2200 and 1760 feet per minute in the 2 H.P. size, reducing 25 to 1 from 1400 R.P.M." Now this statement conveyed a most erroneous impression as to the actual conditions under which the gear worked. When working, the wheels were rolling as wheels did on a rail, and the teeth performed precisely the same duty as the tyres on the back driving wheels of a motor car. The point of contact was momentarily at rest, and each tooth successively became the fulcrum of a lever, *i.e.*, the fulcrum of motion from crank to driven wheel. Also the difference of

diameters of each pair of wheels, divided by the diameter of the rolling wheel, was the fraction of a turn the said wheels got for each turn of the crank—in other words, if the fixed wheels were 11 inches in diameter and the moving wheel 10 inches in diameter, that would be only one-tenth of a turn the said wheel would get for each turn of the crank, but in the opposite direction. That referred to the first pair of wheels only, the second pair of wheels had their relative proportion. Referring to illustration, Fig. 43, wheel P rolling on wheel A got one-fifth of a revolution for each revolution of the crank. The point of contact between A and P was the fulcrum, and was therefore momentarily in a position of rest. The periphery of P opposite the point of contact of P and A was moving at twice the velocity of the crank pin, about 366 feet per minute. Wheels P and p formed a lever of the second class. Wheel A was the fulcrum, and the crank pin the moving point between the greatest and least motion, so that if the teeth of P were infinitesimal, wheel P would simply roll in wheel A without friction. If the teeth of the wheels were infinitely small there would be practically no motion at the point of contact, and as this was the only point of the wheel that was doing work at the moment, it was a matter of indifference what the velocity of the wheel was at any other point, which of course would not exceed twice the velocity of the crank, but it was then doing nothing.

Mr. SPENCE, in reply, said that the discussion on his paper naturally fell under two distinct headings—Mr. Mavor's and the rest. Mr. Mavor alone was really and thoroughly critical in the destructive sense. After damning the paper with faint praise, and pointing out that there was really nothing in the question of motor gearing other than the addition of a single step of gear, he proceeded to state, not to demonstrate, that by generalisation he (the Author) had got pretty badly astray, and consequently his conclusions regarding the applicability of fly-wheels with electric motors were all wrong and, with

Mr Spence.
this flat denial, Mr. Mavor concluded by calling on Mr. Hird to complete the destruction. Mr. Hird was a practician connected with one of the oldest electrical engineering firms in this country, a concern whose completely successful applications of electric motors and their records in the shipbuilding industries must be numbered by thousands. Mr. Hird had at command, as he had not, all the facilities of a large manufacturing establishment for making practical tests. Mr. Hird had plenty of time (four weeks elapsed between the reading of the paper and the opening of the discussion) for looking up records and for making tests, but scorning all such adventitious aids and refusing to bring himself down to the level of a practical paper he, in abstract professorial style, invented an autographic record to prove the error of his (the Author's) ways. At certain stages after the commencement of work on his paper he questioned whether he really had a mission to engineers and shipbuilders. Was there really anything in his experience not already common knowledge to all users of motors? If he had any lingering doubts after the reading of the paper they were completely dispelled when he heard Mr. Mavor's criticism, and after Mr. Hird had spoken he knew that his paper was more than justified—obviously it met the proverbially long-felt want. Rather than waste time in critising Fig. 60, and the fallacious conclusions based thereon, he called attention to Fig. 63, for which he was greatly indebted to Mr Atchley, of Messrs. G. Harland Bowden & Co. This was a true copy enlarged, of a recording ammeter chart. The machines tested were similar punching and shearing machines in the same yard, driven from the same circuit by independent motors of the same make, horse power, and speed. One machine was positively geared to a compound wound motor, the other was belt-driven from a shunt wound motor. The two machines were for test purposes put on to exactly the same duty; indeed both machines worked on the same plate. Now, compare this showing of practice with Messrs. Mavor and Hird's pre-

sentation. These gentlemen contended that a fly-wheel was appropriate and a good thing with a shunt wound constant speed motor. Figure 60 proved it to their satisfaction, for during the first five-and-a-half cycles, each doing the same work at the same speed, the shunt motor current was rising at every stroke, therefore the fly-wheel had been giving out energy—in other words it was of real service. But, unfortunately, Fig. 60 was only a figment of the imagination; Fig. 63

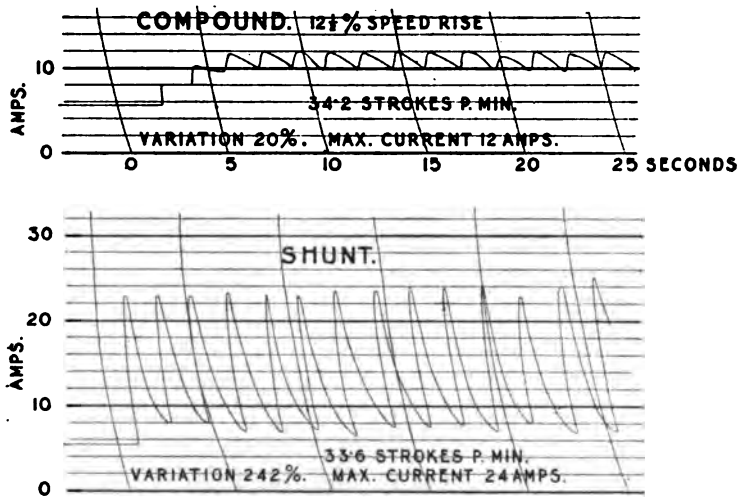

Fig. 63.

was the genuine article. This figure showed that, driven by a shunt wound motor, the current, instead of rising at every stroke, as Messrs. Mavor and Hird said it did, jumped straight to the maximum at the very first stroke, proving the utter inutility of the fly-wheel. It showed also that permanently thereafter the current fluctuations were of the order of 240 per cent. in every cycle, which being interpreted meant that the fly-wheel never got a chance to be of the least service; but Fig. 63 also showed that with a compound wound motor

Mr Spence.
the fly-wheel stored quite a considerable amount of energy—the current rising at each of the first three or four punches to a higher level than before—during this period the fly-wheel was giving out energy stored prior to the tool being started to work. Then after the initially stored energy had been exhausted the speed variations in each cycle were adequate to accumulate and discharge enough energy to keep the armature current fluctuations within about 20 per cent. Engineers could form their own deductions as to which of the two motors would give the greater ultimate satisfaction, the point need not be laboured by him. Mr. Hird in conclusion said his curves showed "that the variation in the current of a shunt motor was not so excessive as to make it absurd to use such a motor." He (the Author) said that his curves were fictitious and misleading—that in fact the current fluctuations with shunt motors were *necessarily* such as to make it absurd to use them with fly-wheel machines, and that shunt motors could not economically be designed to meet the actual fluctuations occurring, because the better the motor the worse was the fluctuation. As the subject of fly-wheels applied, as in this case, to reduce the maximum demand for power—to steady the load—needed ventilation he had made another diagram, Fig. 64., which served to bring out clearly the grossness of fly-wheels for a given amount of storage when the speed variation was small. A good effective variation was seen to be about 12½ per cent., neither introducing difficulties nor throwing away material. As showing on a large scale the misapprehension of fly-wheel action, which was not exclusively Mr. Mavor's, Fig. 20 was referred to in the paper, and now, as showing a true appreciation of fly-wheel action also on a large scale, he had no little pleasure in calling attention to Fig. 65 (Bruce Peebles). This was a tin plate rolling mill at Gorseinon, South Wales. If anywhere a fly-wheel was of value, it should be here, but with the decision to drive by three-phase motors it was realised that fly-wheels would be the merest encumbrance,

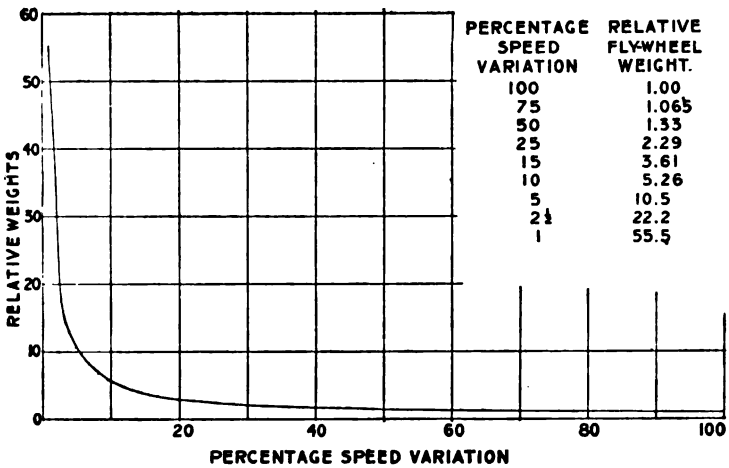
RELATIVE WEIGHTS
60
50
40
30
20
10
0
20
40
60
80
100
PERCENTAGE SPEED VARIATION
PERCENTAGE SPEED VARIATION
RELATIVE FLY-WHEEL WEIGHT.
100 1.00
75 1.065
50 1.33
25 2.29
15 3.61
10 5.26
5 10.5
2½ 22.2
1 55.5

Fig. 64.

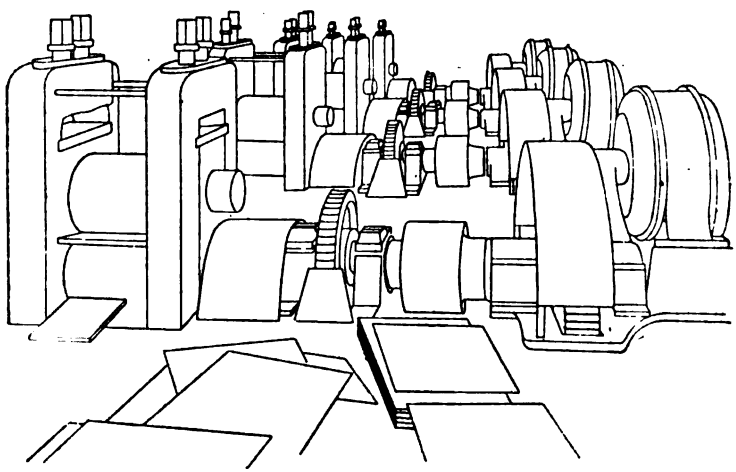

Fig. 65.

Mr Spence.

and they had been omitted—which was good engineering. As to the rest of the discussion he had been greatly interested in Mr. Bruce's contribution on the subject of worm and spiral gear. Certainly the next continuous duty worm gear that passed through his hands would have a cast iron wheel. The common use of phosphor bronze in high class gear was probably a relic of the time when lubrication was imperfect, and metal to metal contact actually occurred. With a well-designed oil bath, a first class lubricant and plenty of it, this condition should never arise. While he was in complete agreement with all that Mr Bruce said as to the necessity for adequate wearing surfaces, for perfection of machine work, of alignment and of lubrication in worm gears, he could not reconcile the admission of these as necessary features with Mr Bruce's advocacy of spiral gearing, in which the pressure-sustaining area of contact must be insignificant, in which permanency of alignment could not be ensured, and in which first class lubrication was impossible of attainment. He should doubt exceedingly that the efficiency was anywhere near the 97 or 98 per cent. quoted, and would be greatly surprised to learn that it was materially over 75 per cent. under actual working conditions. Mr McLaren got a shock when he heard Mr Mavor on fly-wheels, but his good judgment would, he felt sure, shake it off and prevent it from resulting in permanent paralysis. The question of belted *versus* gear-driven machine tools, raised by Mr McLaren, was rapidly settling itself in favour of positive connection; indeed the matter could hardly be said to be open now as regarded the largest tools. There was, however, no denying that the slip-shod handling of belted machines would not do with geared ones; greater alertness was certainly called for, but this was not admitted as a disadvantage—rather the converse. At the same time the dangers were not so great as Mr McLaren feared. If a positively driven drill stuck in a hole it would depend on the size of the drill in relation to the tool and to the

motor as to what would happen. In no case would the drill be instantaneously pulled up—there was always a time element which had the effect of reducing the maximum stress; the fuse might blow, a gear wheel might strip, or, more likely, the drill would twist off. With respect to gear proportions, the change from old millwrighting ideas had taken place insensibly as the result of experience. All that he had done was to try to systematise the experience. The fine pitch wheel of enlarged face width actually did run more quietly than the equivalent wheel of twice the pitch and half the width, the reason being that the angular velocity was more nearly constant. With an infinite number of teeth in a pair of wheels the velocity ratio would be perfectly constant, but as the number of teeth was reduced irregularities appeared, and made themselves heard and felt. Mr McLaren, owing to a slight misapprehension, adversely criticised Fig. 1. As a matter of fact the saw frame swung on fixed trunnions; its weight was not carried by bearings on the motor shaft. In reply to Mr Barr he had used worm gearing on pumps, and in fact the 14 H.P. transmission specified on page 242 of the paper drove a deep well pump. He had also details of three other worm-geared pumps, the largest of which was driven by a 45 H.P. motor. In getting out any gear, worm or other, he would certainly make allowance for the unequal turning moment of pumps as well as for any shocks anticipated. He had no records of continuous duty worm gears as large as Mr Bruce's 100 H.P. example. The paper opened with a reference to one which was treated in precisely the same way as his—namely, by duplex worm gears—this was of 75 H.P., but owing to local prejudice it was not carried out. Regarding the use of overhung pinions, he had not, in his own practice, had occasion to use outside bearings, and in general he did not regard them as necessary or desirable. It was well, however, to see that shaft diameters were not cut too fine. In the case of a 75 H.P. motor, with a 2¾-inch shaft, he required a higher grade steel

Mr Spence.
than the makers were using for their standard shafts. With Mr. Kelsall's remarks on Mr Mavor's diagrams he was, as would have been seen, in full accord. Messrs. Napier and Lackie referred to friction gear which, in his opinion, had served its day and generation; it was not now in competition with other transmissions. Dr. Max Breslauer raised a point of the greatest interest when he said that alternating current electro-magnetic clutches were already on the market, making the arrangement of Fig. 34 available for polyphase as well as for direct current motors. He was not previously aware of this fact, and his ignorance was the reason for having stated that "The gear is not applicable with polyphase motors." As to the other point raised by Dr. Breslauer, he was of opinion that under few, if any, conditions was it good practice to use a very high speed motor in combination with special speed reducing gear, when a normal speed motor direct coupled or with simple gear could be used. Mr MacEwan Ross took exception to the description of his gear, and thought that because the wheels were rolling like track wheels on a rail, whose contact point was momentarily at rest, that they had no meshing velocity. This was obviously a misconception—on first principles, if there were no meshing velocity, there could be no transmission of power. As a matter of fact the meshing velocities were as stated in the paper, and they were strictly comparable with peripheral speeds in plain gears. In the quotation to which Mr Sproul referred, the sentence italicised was that which he characterised as nonsense. A worm gear was not a positive locking device. If it had an efficiency of 90 per cent. as a reducing gear, it had substantially the same efficiency as a multiplying gear, and, consequently, if working against a gravity load it would most certainly run back when current was cut off. As to hollow *v.* parallel worms, and the desirability of hobbed wheels; if there were one thing more clearly demonstrated in Mr Bruce's paper than another, it was the necessity for adequate pressure-sustaining areas of contact be-

tween worm and wheel. All that he (the Author) said was that the hollow worm appealed to him as promising some increase of area, and that there was room for experimental research on the subject. The straight tooth wheel only gave point contact, whereas the hobbed wheel afforded line contact under the same conditions, hence it was certainly to be preferred. The Table on page 220 was given to bring out the fact that *tooth loads* calculated by the Lewis system were increased with increasing number of teeth in the gear and were reduced with increasing velocities. Neither of these essential factors governing permissible loads were given effect to in the so-called millwright rules. It should have been more clearly stated that the figures in columns 3, 4, and 5, were all tooth loads in pounds. Mr. Sproul contended that wheel teeth should still be proportioned to carry all the load at one corner. In this he could not agree with him. It was much cheaper and in every sense better to ensure decent machine work to begin with, and to see that the work was properly upheld thereafter. With machine-cut wheels and parallel shafts the load was perfectly distributed over the whole face width.

The PRESIDENT said he felt sure that the Members were very much indebted to Mr Spence for the very able paper which he had read, and for so many interesting illustrations of the various ways in which motor power could be applied to machinery, which the Author had presented in connection with the paper. The discussion showed what interest had been taken in the paper, and it was their duty to accord Mr Spence a hearty vote of thanks for his kindness in bringing such an interesting paper before them.

The vote of thanks was carried by acclamation.

THE MOST ECONOMICAL MEAN EFFECTIVE PRESSURE FOR STEAM ENGINES.

By Mr R. Royds, M.Sc. (Member).

SEE PLATES XII., XIII., XIV., AND XV.

Held as read 19th March, 1907.

The development of the reciprocating steam engine has been along the line of higher initial steam pressures. Generally speaking, the thermodynamic efficiency has increased as the steam pressures have been raised, owing chiefly to the increased temperature range from the steam chest to the condenser. It does not follow, however, that all modern steam engines are designed to utilise the available energy in the steam to the greatest advantage. The gain in economy obtained with the rise of steam pressures, has somewhat obscured the conditions which make for maximum efficiency for any type of engine using steam at any particular pressure. For an exact determination of the most economical conditions for any type of engine, direct experiments are necessary. It is not sufficient to say that engine builders are bound to know the limits of performance for their engines by careful observations of the coal consumptions for different installations, because the conditions vary considerably in practice, and it is very difficult, if not impossible, to discriminate between all the variable elements which can influence the performance of a steam plant. Even when an engine is tested as regards its steam consumption, it is not often at more than one or two loads, just to see that the guaranteed steam consumptions are not exceeded.

Dr. Mellanby, in summarising the results of a series of tests made by him on a compound condensing engine,* said: "Com-

*Mellanby. Proc. Inst. of Mechanical Engineers. June, 1905. Page 554.

pound condensing engines, with a boiler pressure of 150 lbs. per square inch, may be worked with a mean pressure, referred to the low pressure cylinder of about 40 lbs. per square inch, without any loss of efficiency in terms of brake horse power." In the discussion following the reading of the paper there was only one engineer who agreed with Dr. Mellanby on this point, and, singularly enough, a member of a firm which is noted for the magnitude and elaboration of their experimental steam plant. The conclusion to be drawn from this is that the majority of engine builders do not know exactly the most economical or best mean effective pressures for their engines, given any particular conditions under which they have to work. Many look with contempt upon tests which give results differing from the commonly-accepted notions, saying that, although the results may be all right for the particular engine tested, they do not apply to their engines. There would not be any complaint against such an attitude if it were founded upon direct experimental evidence; but too often, I am afraid, the only reason for the existence of common notions is, that many builders simply copy others. Let this subject be approached with an open and unbiassed mind, and first, consider the published results of a few tests on steam engines, where the power has been varied by varying the cut-off, all other conditions having been kept as constant as possible.

*Fig. 1 shows the results of tests of a compound non-condensing Willans engine using saturated steam, and running at about 400 R.P.M. About 40 I.H.P. was developed with a mean effective pressure of 46 lbs. per square inch, referred to the L.P. cylinder. Boiler pressure 135 lbs. per square inch by guage; admission pressure in cylinder 130 lbs. per square inch absolute. The steam consumption per I.H.P. per hour is here plotted on a base of mean effective pressures referred to the L.P. cylinder, and the number of expansions are indicated on the curve. The

* Willans. Proc. Inst. of Civil Engineers. Vol. XCIII. 1887-88. Pt. III.

first thing to notice is the small variation in the steam consumption which occurs from about 35 to 45 lbs. per square inch mean effective pressure, and, referring to the steam per I.H.P. hour curve, the best mean effective pressure appears to be in the neighbourhood of 40 lbs. per square inch. If the B.H.P. or electrical horse power per hour had been plotted to the base of mean effective pressures, the best mean effective pressure would be found to be greater than 40 lbs. per square inch. The other curve shown on the diagram has been obtained by assuming a constant transmission loss of 6 H.P. at all loads, which is probably not far from the actual losses on such an engine. This curve has the same characteristics as the steam per I.H.P. hour curve, and indicates about 45 lbs. per square inch as the best mean effective pressure for this engine, with the mean admission pressure at 130 lbs. per square inch absolute.

*Fig 2 shows some results obtained from trials made on a compound condensing Willans engine at about 400 R.P.M. using saturated steam, and giving about 40 I.H.P. with a mean effective pressure of 47 lbs. per square inch referred to the L.P. cylinder. All the tests were not made at the particular steam chest pressures indicated on the curves. These have been obtained in this form by interpolation, that is, by first plotting results for constant cut-off on a steam chest pressure base. They show that there is a considerable range of mean effective pressure with nearly constant efficiency or economy. With a steam chest pressure of 175 lbs. per square inch absolute, the best mean effective pressure appears to be about 35 lbs. per square inch. Had the consumption per B.H.P. hour or per electrical horse power hour been plotted, this would probably have been brought to about 40 lbs. per square inch. The curves show that the best mean effective pressure is lower the lower the steam pressure; also, they seem to indicate that the range of mean effective pressure for nearly constant

* Willans. Proc. Inst. of Civil Engineers. Vol. CXIV. 1892-93. Pt. IV.

economy is less the lower the steam pressure. The lines across the curves are lines of constant expansions.

The curves in Fig. 8 give the results of tests with variable cut-off on a Belliss compound condensing high speed engine,* running at about 380 R.P.M., and giving about 250 I.H.P. at normal load with saturated steam. Cylinder diameters, H.P. = 12 inches; L.P. = 20 inches; stroke, 10 inches; boiler pressure about 150 lbs. per square inch by gauge. The cut-off was altered by altering the position of the eccentric. The steam per I.H.P. hour and per electrical horse power hour are plotted, and, considering the latter curve, it is seen that the best mean effective pressure is about 45 lbs. per square inch. It should also be particularly noticed over what a large range of mean effective pressures there is nearly constant economy. †Fig. 4 shows the steam per I.H.P. hour and per B.H.P. hour from tests made on a quadruple expansion engine of the marine type, running at about 140 R.P.M., using saturated steam; H.P. steam chest pressure 200 lbs. per square inch by guage. The diameters of the cylinders are, H.P. 7 inches; 1st I.P. 10·5 inches; 2nd I.P. 15·5 inches; and L.P. 23 inches respectively; stroke, 18 inches, the engines giving about 150 B.H.P. when the mean effective pressure, referred to the L.P. cylinder, was 31·5 lbs. per square inch. When the mean effective pressure is 40 lbs. per square inch, the curve for steam per B.H.P. hour shows no sign of turning upwards again. From this it is seen that a mean effective pressure of from 45 to 50 lbs. per square inch might safely be adopted for such an engine at normal load. The triple expansion engine generally gives slightly less economy than the quadruple expansion engine using the same initial steam pressure, but there is no reason to suppose that the best mean effective pressure will be affected to any great extent.

From tests made by Dr. Mellanby‡ on a cross compound

*Morcom. Proc. Inst. of Mechanical Engineers. July, 1897.
†Weighton. Proc. Inst. of North-East Coast Engs. Vol. XIII. 1897.
‡Mellanby. Proc. Inst. of Mechancial Engineers. June, 1905.

condensing engine, Figs. 5 and 6 have been prepared. The engine has cylinders H.P. = 11·5 inches and L.P. = 20 inches in diameter, with a stroke of 36 inches, generating about 150 I.H.P. at 60 R.P.M., with a mean effective pressure of about 45 lbs. per square inch referred to the L.P. cylinder. Fig. 5 refers to the tests made without steam in the jackets, and Fig. 6 to the tests made with the H.P. cylinder ends and barrel, and the L.P. cylinder ends jacketed, the L.P. barrel being unjacketed. Comparing the steam per I.H.P. hour curves in both figures, it is seen that they both show almost a constant economy over a large range of mean effective pressure, and that the best mean effective pressure for the jacketed tests is lower than for the unjacketed. The other curves have been obtained by assuming a series of constant losses from the engine cylinder to the point of driving. Under ordinary conditions the frictional resistances in an engine, and in shafting, etc., is very nearly constant at all loads. The curves correspond to assumed losses of 10, 15, 20, 25 and 30 per cent. of 150 I.H.P., equal to 15, 22·5, 30, 37·5 and 45 H.P. respectively. The curve of steam per (I.H.P. − 15) per hour would probably correspond to the steam per B.H.P. hour, and it is seen that the best mean effective pressure for the unjacketed tests is about 45 lbs. per square inch, and about 40 lbs. per square inch for the jacketed tests. The other curves show how the best mean effective pressure gets higher as the frictional resistances are assumed to be greater. For instance, the conditions which obtain in an ordinary mill or workshop with line and counter shafts might be taken as being represented by the steam per (I.H.P. − 45) hour curve, where the useful H.P. is (I.H.P. − 45). Under such circumstances, if additional machinery were installed without any increase in the length of line shafting, the steam per useful horse power hour would decrease until some point was reached at which the loss due to the late cut-off of the steam balanced the gain due to increase of useful horse power. However, it should be clearly understood that variation in the steam con-

sumption per B.H.P. hour (or per electrical horse power hour in the case of electrical driving) is the factor which determines the best mean effective pressure to adopt in designing an engine; together, of course, with the costs of manufacture and maintenance. In the case of electrical transmission, the loss from dynamo to motor is nearly proportional to the power transmitted. Such a loss has, therefore, no influence upon the best mean effective pressure.

In Fig. 7 are shown the results of tests made by Mr M. Longridge on a compound condensing unjacketed engine using highly superheated steam,* having cylinders of 21 inches and 36 inches diameter respectively, and a stroke of 3 feet. The steam pressure at the engine was about 120 lbs. per square inch by gauge, and the steam was superheated by about 400 degrees F. This engine drives a weaving mill, and was designed to give 500 I.H.P. at 100 R.P.M. The steam valves are of the piston drop valve type. Considering first the steam per I.H.P. hour curve, it is remarkable over what a considerable range the steam economy is practically constant. Assuming a constant frictional loss at the engine of 10 per cent. of 500 I.H.P. = 50 H.P. the curve of steam per (I.H.P − 50) hour has been drawn. This also shows the considerable range of nearly constant economy, and indicates that the best mean effective pressure is nearly 30 lbs. per square inch. Since the steam was superheated even during expansion, and the ideal conditions were more nearly attained than with engines using saturated steam, it is to be expected that the best mean effective pressure would be rather lower than when using saturated steam at the same pressure. Hence it can be inferred that the dimensions of an engine, for any given power, will be greater for superheated steam than for saturated steam, with a consequent greater first cost.

* Report for 1904. British Engine, Boiler and Electrical Insurance Co., Ltd.

The horse power required to drive the engine and the unloaded shafting was 145·5, and the curve of steam per (I.H.P. – 145·5) hour is also given.

The curves in Fig. 8 show the results of calculations which the Author has made to determine the best mean effective pressure for a compound condensing non-jacketed engine, using saturated steam at various pressures, and assumed to be working with a back pressure of 3 lbs. per square inch absolute. Frictional resistance of the engine was assumed to be equivalent to an additional back pressure of 6 lbs. per square inch. For simplicity, the engine was supposed to have a single cylinder with a piston area of 1 square foot, with constant stroke and speed, and, after making allowance for the probable indicator diagram factor and the probable ratio—

$$\frac{\text{Indicated weight of steam at cut-off in H.P. cylinder}}{\text{Actual weight of steam used.}}$$

the number of foot lbs. of work obtained per cubic foot of steam used was calculated.

Incidentally it may be mentioned that, if I is the indicated weight of steam at cut-off in the H.P. cylinder, and W is the actual weight of steam used, the Author has found that, generally, an unjacketed compound engine using saturated steam at constant initial pressure follows the law $\frac{I}{W} = a - b \times r$, where r is the number of expansions and a and b constants.

A comparison of the various curves from Fig. 1 to Fig. 7 shows that the differences in the steam consumptions of the various engines tested has not much influence upon the best mean effective pressure. In other words, the differences in the diagram factors and in the values of $\frac{I}{W}$ between the several engines, has little influence upon the best mean effective pressure. This is also confirmed by comparing

the calculated results with the actual experimental values. (Compare Figs. 2 and 9.)

The diagram factors and ratios $\frac{I}{W}$ used in these calculations are taken from the non-jacketed tests in Dr. Mellanby's paper previously mentioned, and have been assumed to apply for all steam pressures. First, the mean effective pressure $= p_m$ was calculated in lbs. per square inch, assuming the law $p \times v = \text{constant}$, and a back pressure of 8 lbs. per square inch. For the various values of r the diagram factors (c) were then obtained and multiplied into the corresponding p_m, that is, actual mean effective pressure $= p_e = p_m \times c$. From this an additional 6 lbs. per square inch was deducted to allow for a constant transmission loss. The work done per cubic foot of steam used is $(p_m - 6) \times 144 \times r \times \frac{I}{W}$ ft. lbs. The results of these calculations are plotted in Fig. 8. Assuming the same values of c and $\frac{I}{W}$ for the same values of r in the case of a non-condensing compound engine as for a condensing engine, and assuming a back pressure of 17 lbs. per square inch instead of 8 lbs. per square inch, calculated results for a non-condensing engine are shown plotted in Fig. 10. Comparing the curves in Figs. 8 and 10 it is seen that—

1. There is a considerable range of mean effective pressure with little variation in economy, and that the economical range of mean effective pressure is less for the condensing than for the non-condensing engine.

2. The most economical or best mean effective pressure is higher for the non-condensing than for the condensing engine, especially with the lower steam pressures.

These calculated results are not intended to be used as absolutely trustworthy guides for all conditions, but are given merely as an indication of what is generally true. The lines across the diagrams are lines of constant expansions.

Figs. 9 and 11 give the corresponding curves for the calculated steam consumptions per H.P. hour, for the condensing and the non-condensing engines respectively. These, of course, show the same features as the previous diagrams, and also indicate that the range of mean effective pressure for nearly constant economy decreases with the decrease of steam pressure. The lines across the curves are lines of constant expansions, and, comparing Fig. 2 with Fig. 9, it is seen that these curves are of the same general nature in both cases.

Single Cylinder or Simple Engines.

*Fig. 12 shows results obtained from a series of tests made on a double-acting single cylinder engine, having a cylinder diameter of 6 inches, and a stroke of 8 inches, R.P.M. about 220, with a steam chest pressure of about 65 lbs. per square inch absolute. The cut-off only was varied in each series of tests. The cylinder ends, barrel, and the steam chest cover, could be steam-jacketed, and the trials showed that maximum economy was obtained with all the jackets in operation. Comparing the curves of steam per B.H.P. hour, series 1 and 10, it is seen that the jackets reduce the best mean effective pressure from about 35 lbs. per square inch for the unjacketed condensing to about 25 lbs. per square inch with steam in all jackets. Series 2 curves give the results of non-jacketed condensing trials made with steam superheated by about 50 degrees F., the best mean effective pressure being about 24 lbs. per square inch. Also, this curve is flatter than the unjacketed or jacketed series using saturated steam.

The results of tests on a non-condensing, single-acting two-cylinder piston-valve engine are given in Fig. 13†. The cylinder diameter is 7·094 inches; stroke, 11·8 inches; R.P.M. about 180; and steam pressure 100 lbs. per square inch absolute at the engine, which is designed to give 17 I.H.P. It is to be again noted that the range of mean effective pressure for

*Donkin. Proc. Inst. of Mechanical Engineers. 1895. Page 90.
†Ripper. Proc. Inst. of Civil Engineers. Vol CXXVIII. 1896-97. Part II.

nearly constant economy is considerable, and that superheating lowers the best mean effective pressure.

* Figs. 14 and 15 show the results of trials on a Corliss single cylinder condensing engine, having a cylinder diameter of 21·65 inches; stroke, 43·31 inches; and R.P.M. 60; giving about 190 I.H.P. with a mean effective pressure of about 40 lbs. per square inch. The steam per B.H.P. hour only has been plotted in both diagrams. Fig. 14 refers to the unjacketed series, and shows that the steam consumption was lowest when the boiler pressure was about 64 lbs. per square inch by gauge. Excessive valve leakage and condensation must have been causing the excessive losses at the higher pressures. They also show that the best mean effective pressure decreases as the steam chest pressure decreases, the steam chest pressure being a few pounds per square inch below the boiler pressure. Comparing Figs. 14 and 15, it is seen that the best mean effective pressure is rather lower for the jacketed than for the unjacketed series.

Shortly after writing this paper, the idea suggested itself to the Author to plot the steam pressures on a base of the most economical or best mean effective pressures. The results are shown in Figs. 16, 17 and 18. Fig. 16 refers to the Willans compound condensing trials, the values being obtained from Fig. 2. Fig. 17 shows the corresponding results obtained from Figs. 8 to 11, and Fig. 18 shows the values for the Delafond single cylinder Corliss condensing trials derived from Figs. 14 and 15. The various points shown plotted in Figs. 16, 17 and 18 are given as first read off by the Author from the corresponding figures previously mentioned, and they have not been altered in any way.

Figs. 16 and 17 show that there is a straight line law connecting the best mean effective pressure and the steam pressure, which law can be expressed by the formula, $p_e = a(P + b)$; where p_e is the best mean effective pressure, P the

*Proc. Inst. of Mechanical Engineers. 1889. Page 723.

steam pressure, and a and b constants depending upon the conditions under which the engine is working.

The points in Fig. 18 lie in a very irregular manner, but when it is considered that the steam pressure P is, in this case, the boiler pressure, it can hardly be said that they contradict the above straight line relation.

Summary of Conclusions.

1. The higher the mean effective pressure the lower will be the first cost of a steam engine of any given power.

2. For multiple-expansion unjacketed condensing engines, using saturated steam at about 165 lbs. per square inch absolute in the engine cylinder, the best mean effective pressure for normal load is from 40 to 45 lbs. per square inch, referred to the L.P. cylinder, and the economy varies but slightly for a considerable range in the mean effective pressure.

3. For jacketed multiple-expansion condensing engines with steam pressure as above, the best mean effective pressure is slightly lower than for unjacketed multiple-expansion condensing engines.

4. Non-condensing engines have a best mean effective pressure rather higher, and the variation in economy for any given range of mean effective pressure is less, than for condensing engines.

5. For steam pressures higher than 165 lbs. per square inch absolute, the best mean effective pressure is higher than from 40 to 45 lbs. per square inch, and is probably as high as from 45 to 50 lbs. per square inch referred to the L.P. cylinder, for triple or quadruple expansion engines using saturated steam over 200 lbs. per square inch boiler pressure.

6. Multiple expansion engines using saturated steam below 165 lbs. per square inch absolute, have their best mean effective pressures below from 40 to 45 lbs. per square inch, and this best mean effective pressure falls more rapidly with fall of steam pressure for the condensing than for the non-condensing engine.

7. The more economical an engine can be made, the lower is likely to be the best mean effective pressure, though not to any large extent. Hence, large engines may have a rather lower best mean effective pressure than small engines using steam at the same pressure.

8. Engines using highly superheated steam, so that the steam is superheated during expansion, have a best mean effective pressure lower than for engines using saturated steam, with a consequent increase in first cost for any given power. Such engines, however, have a high thermal efficiency, and will maintain the same efficiency over a wide range of power.

9. The best mean effective pressure is about 35 lbs. per square inch for single-cylinder condensing non-jacketed engines using saturated steam at about 75 lbs. per square inch absolute. For other conditions the same general laws hold good as for multiple expansion engines.

The curves of steam consumption per H.P. hour have been obtained by first plotting the total steam consumption on a horse power base, correcting these, where necessary, by drawing a mean line through the points. The steam per H.P. hour values were then calculated from this mean line, and may not exactly correspond with the values tabulated by the various experimenters whose results have been used.

The ratio of expansion, or number of expansions, has purposely been kept in the background, because results can be dealt with more easily and comprehensively by considering the mean effective pressures.

The most economical mean effective pressure is influenced slightly by the variation of first cost with variation of mean effective pressure, but no particular account has been taken of this. Also, the character of the load, that is, whether variable or fairly constant, will have an influence. For example, an engine which is subjected to frequent and long continued overloads should have a lower mean effective pressure for normal load than a similar engine which is nearly always working at the normal load.

Subjoined is a bibliography of the most important papers dealing with the steam engine problem, all of which are based upon direct experimental evidence. These ought to be studied by all engineers who are concerned with the generation and distribution of motive power.

BIBLIOGRAPHY OF THE MOST IMPORTANT PAPERS.

Proceedings of the Institution of Civil Engineers.

*Vol. XCIII., 1887-88. Part III.—Willans—"Economy Trials of Non-Condensing Steam Engines: Simple, Compound and Triple."

*Vol. CXIV., 1892-93. Part IV.—Willans—"Steam Engine Trials."

Vol. XCIX., 1889-90. Part. I.—Reynolds—"On the Triple Expansion Engines and Engine Trials at the Whitworth Engineering Laboratory, Owens College, Manchester.

*Vol. CXXVIII., 1896-97. Part II.—Ripper—"Superheated Steam Engine Trials."

Vol. CXXXI., 1897-98. Part I.—Callendar and Nicolson—"On the Law of Condensation of Steam Deduced from Measurements of Temperature Cycles of the Walls and Steam in the Cylinder of a Steam Engine."

Proceedings of the Institution of Mechanical Engineers.

See Index of Proceedings for Research Committees' Reports on "Marine Engine Trials;" "Steam Engine Trials;" and "Steam Jacket Trials."

*1889. Delafond. Page 723.—Summary of "Experiments on a Single Cylinder Condensing Corliss Engine."

(Or see Annales des Mines, 1884, for full report).

*1895. Donkin.—"Experiments on a Vertical Single Cylinder Steam Engine, with and without Steam in Jackets, Condensing and Non-Condensing, Double and Single Acting at Different Expansions, with Saturated and Superheated Steam."

1895. Sankey.—"Governing of Steam Engines by Throttling and by Variable Expansion."

*1897. Morcom.—"Comparative Trials of a Belliss 250 H.P. Quick Revolution, Self-Lubricating Engine, Condensing, when Governing by Expanding and Throttling."

1902. Weighton.—"Some Experiments on Steam Engine Economy."

*1905. Mellanby.—"An Investigation to Determine the Effects of Steam Jacketing upon the Efficiency of a Horizontal Compound Steam Engine."

Proceedings of the Institution of North-East Coast Engineers and Shipbuilders.

*Vol. XIII., 1896-7.—Weighton—"The Experimental Engines at the Durham College of Science, Newcastle-upon-Tyne, with some results from same."

Vol. XIV., 1897-98.—Mellanby—"The Effects of Different Arrangements of Crank Angles upon the Economy of Quadruple Expansion Engines."

Vol. XVI., 1899-1900.—Weighton—"Receiver Drop in Multiple Expansion Engines."

Proceedings of the Manchester Association of Engineers.

Nov., 1900. Mellanby.—"Relative Efficiencies of Triple and Quadruple Expansion Engines."

Proceedings of the American Society of Mechanical Engineers.

Vol. VII. Page 328.—Peabody—"Steam Engine Tests."

Vol. X. Page 722.—Denton and Jacobus—"Steam Consumption of Engines at Various Speeds."

Vol. XIV. Page 381.—Peabody and Miller—"Tests on the Triple Expansion Engine at the Massachusetts Institute of Technology."

Vol. XIV. Page 426.—Carpenter—"Comparative Variation in Economy with Change of Load in Simple and Compound Engines. Effect of Steam Jacket on High Speed Engines."

*1904. Longridge.—Chief Engineer's Report. British Engine, Boiler and Electrical Insurance Co., Ltd.

(Or "The Engineer." Vol. XCIX., 1905. Page 546).

"Trials of an Inverted Vertical Compound Engine Using Superheated Steam."

*Indicates those Papers from which the Author has obtained data.

Discussion.

Professor A. L. MELLANBY, D.Sc. (Member), said his opinions upon the subject of the paper so practically coincided with those of the Author that he felt he had nothing new to say. They were much indebted to Mr. Royds for getting together so much information, and for showing how all the published experiments agreed in proving that, for economical working, mean pressures ought to be fairly high. It was a branch of engineering to which he himself had devoted a considerable amount of time, and for a good many years he

had been advocating the adoption of high mean pressures. He could remember the astonishment with which many of the Members of the North East Coast Institution regarded the results from the experimental engine at the Armstrong College, which were presented to them in a paper by Professor Weighton. In the discussion that followed the manager of one of the largest marine engine works on the North East Coast mentioned that up to the reading of that paper he had always aimed at getting a mean pressure of 26 lbs. per square inch for triple expansion marine engines, under the impression that this would give him maximum economy. At that time there were so few published accounts of experiments that he could understand engineers having some difficulty in changing their cherished opinions. When they were confronted with the mass of evidence put before them by Mr Royds, there seemed to be nothing left but to acknowledge that high mean pressures were desirable. He was afraid that many people had attached themselves to the side of low mean pressures because it was so much insisted upon in text books. There the familiar hyperbolic diagram and the formula expressing the work to be obtained per pound of steam were given in such a convincing way that, the majority accepted them under the impression that they were learning some great scientific truth. The curious thing was that it could be shown from first principles that mean pressures ought to be fairly high. Thus if the hypothetical engine of the text books were taken and to it attributed, in the first instance, a certain amount of frictional resistance, then one step nearer to the actual engine would have been approached. Next consider how the diagram factor changed with ratio of expansion, and, finally, that the difference between the indicated weight of steam and the steam actually used by the engine was roughly constant for all expansions, and it would be soon recognised that the idea of very low mean pressures ensuring economy was quite erroneous. The diagrams given by Mr Royds, in Figs. 16, 17 and 18,

were of great interest, and, he thought, quite new. The fact that the relation between steam pressures and the best mean pressure could be represented by a straight line law was worth noting. One point especially suggested by the paper was the need for systematic tests upon large engines. He could well imagine that some people would criticise Mr Royds' conclusions, because the majority of the engines referred to were small ones, and it would certainly be more satisfactory if tests with large engines could be made. It might probably be objected that the cost of experiments of this type would be very great. This was certainly true, but considering the immense saving that would be brought about if it were definitely settled that low mean pressures with their necessarily large and costly engines were not needed for economical working, he was sure it would be conceded that the money spent in such tests might prove a good investment.

Mr ALEXANDER CLEGHORN (Vice-President) said he was of opinion that the main desire which Mr Royds had in presenting his paper was, not so much to set before the members of the Institution actual standards, as to indicate a system, whereby they themselves might arrive at the condition of minimum steam consumption for any set of circumstances, in which a given engine might have to run. For this purpose the Author had chosen to plot in curves, the mean pressures of steam obtained in an engine against the weight of steam used per indicated horse power. This method was entirely satisfactory, but the chief point to be noted was the influence which the power required to overcome the friction of the engine itself and of the intervening gearing had on the condition of greatest economy to drive the machine or tool to be driven. Mr Royds had put the case very clearly in assuming, as an example, that the work required to overcome the friction of the engine and of the intervening gearing was constant. This work was not always constant in amount for all powers developed; on the contrary, it was seldom, if ever, wholly constant, but in many

cases a large part of it might be regarded as constant, and, for convenience, and to illustrate his point, Mr Royds had taken the quantity as constant. It would therefore be seen from the curves drawn that, although the most economic mean pressure for a given engine might be about 35 lbs. per square inch, yet, when a constant load of 6 per cent. was introduced, the most economic mean pressure would be about 38 to 40 lbs. per square inch. The reason was perfectly plain, and the proposition only required to be stated in order to gain acceptance, and in stating it Mr Royds had done good service. The point was of great importance in mill driving where much gearing was employed. As to marine work, they had in the reciprocating engine a mechanism, for its class, running with the least amount of friction, and since the gearing between the engine and the screw propeller was of the simplest character, the mean pressures for which this class of engine was designed were not so high as might be necessary in the case of engines driving extensive mills, in order to secure maximum efficiency. In the case of the triple expansion marine engine when the boiler pressure was 180 lbs. above atmosphere, the most economic mean pressure which could be maintained at sea did not exceed 36 to 37 lbs. per square inch referred to the low pressure cylinder. In many cases a much higher mean pressure was arranged for, especially in Admiralty work, but here other considerations than that of economy in steam consumption determined the design. If he were to enter a word of criticism, it would be directed towards the remarks which Mr Royds had made regarding the information which he believed that engineers possessed, generally, concerning the efficiency of their engines. Doubtless, much of what he said was true, and in order to supply, in measure, the information at that time, the Institution of Mechanical Engineers, some years ago, appointed a research committee to accurately record the performance of several typical marine engines and the results were published in the transactions of that Institution. Since then, the Ad-

miralty caused to be measured, during many of the official trials of war vessels, the amount of feed-water required at various powers, both for the main propelling machinery and for the auxiliary machinery. These results have been made public from time to time in the pages of *Engineer* or *Engineering*. Mr Royds had referred to Dr. Mellanby's very valuable paper on "An Investigation to Determine the Effects of Steam-jacketing upon the Efficiency of a Horizontal Compound Steam Engine," from which he had taken the results of certain experiments in order to complete his diagrams. It would be desirable if these results could be embodied in the present paper in order to make it more complete.

Mr. JAMES ANDREWS (Member) said when Mr. Hall-Brown read a paper on a somewhat similar subject about five years ago, Professor Weighton explained some of the trials of his engines, and at that time, he (Mr. Andrews) took exception to the conclusions drawn from those trials, and doubted the method of determining the most economical mean pressure for multiple expansion engines. He quoted, at that time, from a paper by Thurston and Brinsmade on the trials of the Sibley College engine, and more particularly with reference to the triple expansion engine trials which he illustrated by a similar curve to those given in Mr. Royds' paper. He had since learned, however, that those trials were originally made under the supervision of Professor Carpenter.* The trial results from this engine were very different from those obtained on the Durham College engine, and very different from what Mr. Royds' illustrated in his paper. The Sibley College engine was of the horizontal Corliss type, generally similar to the engine tested by Dr. Mellanby. The cylinders were, H.P. 9 inches, I.P. 16 inches, and L.P. 24 inches in diameter respectively by 36 inches stroke, supplied with steam at 120 lbs. gauge pressure, and the most economical mean pressure was

*See Transactions of the American Society of Mechanical Engineers, Vol. XV., 1894-95.

Mr James Andrews.
about 18 lbs. per square inch, the total number of expansions being about 22. Unlike the curves given in Mr Royds' paper, there was no flatness on the curve of this engine, the most economical mean pressure was clearly defined, and the mean pressure could not have been increased by 5 lbs. without a perceptable loss in economy. With the American series of trials in view, it had occurred to him that there must be some essential difference between one engine and another. If the Sibley College engine could give results so widely different from the Durham College engine and the engine tested by Dr. Mellanby, then it seemed to him that there was some important element or factor not common to all three. The Sibley College trials were very comprehensive, and the most complete series of trials of the kind with which he was acquainted. They embraced simple, normal compound, abnormal compound, and triple expansion engine trials, with steam jackets and without steam jackets; and the completeness of the data given was in contrast to many of the papers recorded in this country, wherein much valuable data was omitted, which precluded independent study from any point of view but that of the experimenter. He had approached the subject originally from a totally different point of view to most of the writers on the subject, and, consequently, he took a different view of the influence of certain elements. About ten years ago he was asked to design a six-stage expansion engine, having six cylinders working on three cranks, a case in which the ordinary methods of judiciously guessing the relative sub-divisions of expansion did not apply; but, in the course of calculating the dimensions of the various cylinders, he learned that such an engine had been made, and, when the indicator diagrams were examined, the relative powers in the cylinders were 80, 95, 40, 5, 80, and 100 respectively, beginning from the high pressure end. The boiler pressure was originally 200 lbs. per square inch, but ultimately a new boiler was substituted for a working pressure

of 250 lbs. per square inch. In both cases the result was very much alike, so far as economy was concerned, because, in neither case was the coal consumption very different from that of compound engines of equal power on the same service. That seemed a very extraordinary result from an extreme case of subdivision of expansion, nevertheless, when compared with the calculated cylinder ratios by his own method, it appeared to be exactly what one would expect from the actual cylinder dimensions of the engines, and, it was evident from the result, that the influence of the high steam pressure was completely counterbalanced by the adverse influence of other factors. He, therefore, thought that the subdivisions of expansion and power were of greater importance than they got credit for and could not be treated on the aggregate with other factors as was done in the paper. The subject was not so simple as it would appear, because the curves of mean pressure, co-ordinated with steam consumption per brake horse power, embraced every essential element, dynamical and mechanical, in the efficiency of the steam engine. Consider the application of those curves to multiple stage expansion engines, and, for simplicity, take the case of a compound condensing engine supplied with steam at 100 lbs. per square inch and exhausting to the condenser at 4 lbs. per square inch, the receiver pressure being 25 lbs. per square inch, all in absolute pressures, and for the purpose of illustration let the cut-off or rate of expansion be used for comparison in place of mean pressure as the base line. Let Fig. 19 represent a steam cylinder having the economy curve superposed thereon, and presume this cylinder to represent an independent engine, similar to the one section of the Owens College engine at Manchester*. Suppose this engine to be tested over a wide range of expansions, similar to the single engines tested by Donkin & Carpenter, but, between the limits of 100 lbs. and

* See Professor Osborne Reynold's paper on Engine Trials, Trans. of Institution of Civil Engineers, 1889.

25 lbs. absolute pressure as representing the H.P. cylinder, then a curve would be obtained, say, like that shown by the dotted line, having its lowest rate of steam consumption at some point *d* between *a* and *b*. Now if another cylinder be tested in the same way between the limits of 25 lbs. and 4 lbs.

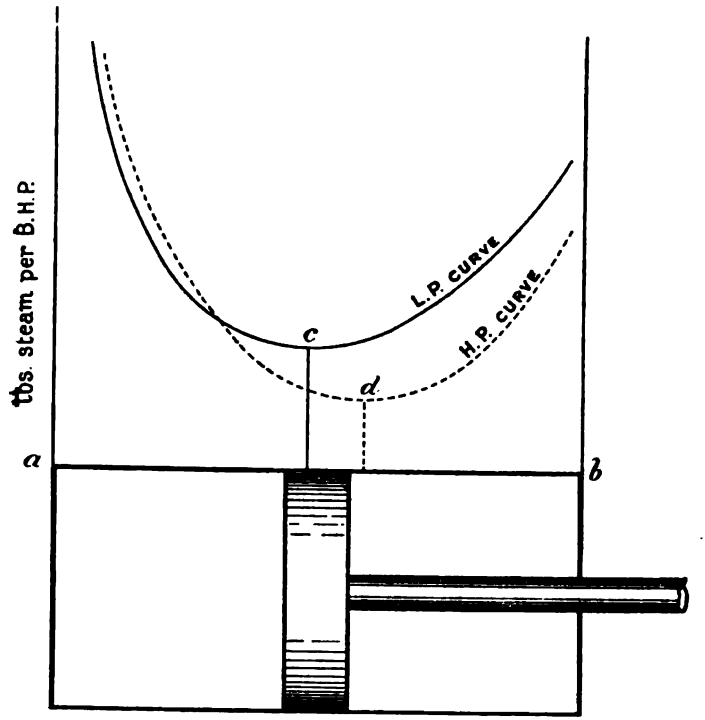

Fig. 19.

absolute pressure representing the L.P. cylinder, developing the same power as the H.P. cylinder, then a second curve would be obtained, say, like that shown by the full line, having its lowest rate of steam consumption at *c*. Neglecting intermediate losses for the moment, it followed that if those two single engines were placed in series, the exhaust from the H.P. engine being the steam supply to the L.P. engine, there

would be a rate of expansion in each cylinder which would be better than any other, and any departure from the most economical cut-off would, more or less, reduce the economy of such a compound engine. It would, therefore, be seen that the economy curve of a multiple expansion engine was the combination of a series of curves, and from the characteristic of the curves it was obvious that by varying the total rate of expansion, a decreasing rate of steam consumption on one of the series might be coincident with an increasing rate of steam consumption on another of the series, so that their combination on one curve would make the latter curve relatively flat. This might account for certain curves being very flat, giving a small variation of economy over a wide range of mean pressure, as referred to in the paper. Now, he wished to ask if it was certain that each, or any, of the engines illustrated by Mr. Royds was working most economically on the aggregate? Would they stand analysis as he had described, so that it could be said that the subdivisions of expansion were the best, and that each cylinder was working at its most economical rate of expansion? He thought not. He knew, of course, that the Durham College engine was tested at three different cut-offs for each point on the curve, but that did not by any means satisfy the case, because on a crank-connected engine, each cylinder depending on its neighbour, every variation in cut-off in one cylinder affected everything on the other cylinders at the same time, and even varying the total rate of expansion affected every factor throughout the engine which went to make up the sum of the gains and losses represented by those economy curves. Hence, he did not think the curve for this engine determined the most economical mean pressure which could be obtained from such an engine, and, in his opinion, it could not be said that any of the curves given in the paper determined this point. It was not to be supposed that high mean pressures had not been tried, because from 1884 till about 1896, British warship

engines were designed with cylinder ratios of 1:2.2:5 for mean pressures of about 40 lbs. per square inch, and 150 lbs. boiler pressure. Those engines were notoriously extravagant at their full power, and, although the Admiralty were extremely reticent with precise data, it would be found from a paper by Sir John Durstan* that they were much more economical at 24 lbs. mean pressure than they were at 35 lbs. mean pressure. Those trials were of course complicated by the influence of auxiliary machinery and the boilers, but, the difference in economy was greater than could be accounted for in that way, and, in any case, if the engines had been in any sense economical, it would have been discovered during that time. He thought that the type of engine best adapted for determining the best subdivisions of expansions, and the best rate of expansion in each cylinder, which would, in fact, give the most economical mean pressure reduced to the L.P. cylinder, was the Owens College engine, in which each cylinder wrought on a separate crank as an independent engine with its own dynamometer. This type of engine was more flexible for experimental purposes than one coupled by cranks, because the power could be equally divided by the separate dynamometers, while all other elements could be varied at discretion. The influence of slightly varying revolutions per minute was not so great as to materially affect the result; moreover, separate units lent themselves to changing the cylinders with comparatively little trouble. Such an engine would be likely to give better results than they had yet got; but the trials must be carried out on some definite system; promiscuous trials on engines of different design and irregular subdivisions of expansion did not seem to him to meet the case. At all events, American engineers worked entirely in the opposite direction—they used large cylinder ratios and early cut-offs, and if one looked up Bryan Donkin's list of the most

* Trans. of the Inst. of Naval Architects, Vol. 40, 1898.

economical engines in the *Engineer* of October, 1899, it would be found, with one exception that, they all worked at from 18 lbs. to 25 lbs. mean pressure. It therefore seemed to him that the investigation ought to go further before one could accept it as definitely settled what the most economical mean pressure for an engine was.

Mr JOHN A. RUDD (Member) said that the first thing he wanted to understand was Mr Royds' definition of the word "economy." In that connection it seemed to him that the range of the Author's investigation had been rather limited. Most of the examples given in support of the opinion, which Professor Mellanby declared as at the root of the paper, were from engines which did not stand before the world as examples of the highest economy from the point of view of steam consumption. They were engines which were designed, in the first place, to occupy a certain space, and as such, other considerations had to go by the board—referring to the high-speed type of engines. At the time they were introduced the demand was almost exclusively for comparatively small engines. High speeds enabled small dynamos to be used to reduce the cost generally. If the question were looked at from the point of view of the cost of the plant one could not but agree with Mr Royds and have high mean pressure, but if it were not a question of cost of plant, but of cost of power, then he thought that one would come to the opposite conclusion altogether. Mr Cleghorn had indicated that in Admiralty practice comparatively high mean pressures were adopted, and the reason for that was obvious, because considerations of space very largely ruled.

Mr CLEGHORN—It was for conditions of space and weight.

Mr RUDD—It became necessary to use high mean pressures for that reason, but, as Mr Andrews had pointed out, where those considerations did not rule, and first cost, perhaps, did not altogether rule, then they came to mean pressures below 25 lbs. He thought the most economical engine in Scotland was working at about 21 lbs.; the steam consumption in that case was under 9 lbs. per indicated horse-power per hour, and that was without any extraordinary

conditions—just the ordinary working conditions which had been prevailing in a factory with ten hours running every day. Mr Royds had passed rather lightly over engines of that type. He had mentioned Professor Weighton's data with regard to a marine engine with 31½ lbs,. and in that case he had got into another range of engines, but almost all the other cases that he had mentioned were quite small units. Another case that he had treated with somewhat scant courtesy was the engine tested by Mr Longridge, where, again, a very low mean pressure was got. It was a very low figure, and the economy in that case was also one of the lowest on record. He thought, taking the question generally, and to come back to what he had said at first, one wanted a definition of what was meant by the word "economy." A question like that could not be considered purely on a technical and scientific basis, but must be taken into consideration from the commercial side of the problem also, and the cost, with the cost of working, had to be considered. Mr Royds had touched on that to a slight degree when he said that the lower the mean pressure the greater the cost of the engine. At the same time, that was only a general statement which might mislead a non-technical buyer. He considered that the further a buyer went in the opposite direction the better value he was getting for his money, whereas if he considered his coal bill at the end of the year it would be very misleading. The Institiuton was very much indebted to Mr Royds, because this subject was one that had been a little lost sight of in late years, or perhaps he himself had not been watching matters. The subject was of exceptional interest.

Correspondence.

Mr. ARCHIBALD GILCHRIST (MEMBER) thought that Mr. Royds' remarks on page 279 were rather scathing, as regards lack of experimental evidence, and engine builders copying one another too blindly. Probably the Author had not taken into account the expenses involved in such tests upon plant of large power, say a modern marine installation; such as tests with

respect to the re-adjusting of valve gear, and pitch of propeller, and modifying or replacing of valves, etc., and last, but not least, keeping the owners waiting for delivery of the vessel. He would be glad if the Author would inform him whether the superior economy of a quadruple expansion engine, over a triple, using a similar initial pressure, as mentioned on page 281, was shown by an indicated or a brake horse-power record, as he had always been of the opinion that the quadruple expansion engine, under the conditions above named, would have the lower diagram factor.

Mr MICHAEL LONGRIDGE (Manchester) agreed generally with Mr Royds' conclusions and figures, but thought that for large condensing engines the mean effective pressures giving the lowest steam consumption per B.H.P. hour would be lower than those shown in Figs. 8 and 9, which appeared to have been calculated on the assumption that 6 lbs. mean pressure would be required to overcome the friction of the engine itself. He had not found that so high a pressure was required even in Willans' engines with their single action and splash lubrication, and it certainly was not in the larger mill engines with which he was better acquainted. In support of this assertion, he gave the following figures obtained by indicating engines disconnected from all shafting and run with a boiler pressure low enough to keep the speed steady while the diagrams were being taken. In most of these cases the indications were taken when the engines were quite new and stiff, so that it was probable that in ordinary work the mean pressure required to overcome the engine friction would be lower than those given. The Table given on the following page showed that the mean pressures required to drive steam engines varied from a little under 2 lbs. to a little over 4 lbs. per square inch of L.P. cylinder area according to the type of engine. If the figures were correct, engineers would do well to adopt somewhat lower mean pressures than the Author suggested as the best. There was another reason for keeping mean pressures down in designing new engines, at least for factory work, and that was the

DESCRIPTION OF ENGINE.	Cylinder diameters and stroke.	R.P.M.	Boiler pressure.	Kind of valves.	Ropes or gearing.	Diameter of fly-wheel.	Mean effective pressure to drive engine.	REMARKS.
Three-crank inverted vertical, fly-wheel shaft coupled to end of crank-shaft,	22½" 34" 56" × 4'	80	180	Corliss	40 Ropes	18ft.	2·86	Quite new, ropes not yet on
Three-crank inverted vertical, fly-wheel shaft coupled to end of crank-shaft,	18½" 29" 47" × 4'	72	180	,,	Ropes	...	2·11	Had run about a week, ropes taken off
Three crank inverted vertical, fly-wheel shaft coupled to end of crank-shaft,	25" 39" 62" × 4' 6"	74	180	,,	54 Ropes	18ft.	2·6	Had run about 1½ hour
Three-crank inverted vertical, fly-wheel shaft coupled to end of crank-shaft,	14" 22½" 36" × 3' 6"	77	160	,,	Ropes	...	2·08	Just started
Pair of cross compound inverted vertical, with rope drum between,	19" and 38" × 4'	65	130	,,	,,	...	1·91	New ropes, not yet put on
Pair of horizontal cross-compound, with tail rods,	29" and 58" × 5'	65	160	,,	44 Ropes	24ft.	2·02	Had run a few minutes
Pair of horizontal cross compound, with tail rods,	26" and 53" × 5'	65	160	,,	35 Ropes	26ft.	3·15	Just started
Pair of horizontal cross-compound,	25" and 52" × 5'	60	...	...	Ropes	...	3·34	,, ,,
Do. do.	32" and 56" × 4'	66	60	HP Corliss LP Slide	20 Ropes	...	2·45	Had run over 20 years.
Pair of horizontal tandem triple compound,	20" & 37" / 32" & 37" × 5'	52	160	Corliss	Ropes	26ft. 6in.	4·45	Just started. The diagrams were not taken by Brit. Engine Boiler & Electrical Coy.'s Inspectors.
Three beam engines working on to a 3-throw crank shaft Fly-wheel shaft coupled to end of crank shaft,	13" / 20" / 33" × 3'	60	160	,,	,,	...	3·65	Just started, ropes not on
Horizontal tandem compound,	16" and 30" × 3'	78	120	,,	,,	16ft.	3·12	,, ,, ,,
Do. do.,	15" and 30" × 3' 6"	70	85	Slides	9 Ropes	14ft. 3in.	3·34	,, ,, ,,
M'Naughted beam,	40¼" × 3' & 48" × 6'	29	50	...	Gearing	26ft.	1·81	Had been running many years
Beam condensing,	31½" × 6'	30	50	...	,,	18ft. 6in.	2·29	,, ,, ,,
							1·93	,, ,, ,,
Do. do.,	36" × 6'	29	40	...	,,	26ft.	3·18	With fly-wheel running in 4 ft. of water

practical certainty that before the engine would be replaced the load upon it would be considerably increased, and unless the engine were too large when put down it would be too small before being taken out. When rope driving was adopted future increase of load could be provided for by running the engine slowly at first, and increasing the speed by increasing the diameters of the driven rope drums when more power was required. He need perhaps hardly add that in practice the choice of a mean effective pressure was, to some extent, dependent on cylinder ratio, valve gear, and distribution of stresses. It was not possible to pile up mean pressures regardless of these conditions.

Mr C. A. MATTHEY (Member) considered Mr Royds' paper an admirable one, and felt that the Author had completely made out his case. Long ago it was regarded as the whole duty of man to expand the steam down to the back pressure, or as near that as it could be got, and it would seem that the school which held that opinion had not yet died out. Now, while he thought that Mr Royds was quite right in appealing to practice in the shape of brake trials rather than to theory, he also thought it would serve a useful purpose if it could be shown that *even theoretically*, in an engine without friction and without cylinder condensation, the most economical rate of expansion was far less than that which reduced the effective pressure to *nil* at the end of the stroke. It would help to silence the argument referred to by Mr Royds that "although the results may be all right for the particular engine tested, they do not apply to their engines." Let the absolute back pressure be b, expressed as a fraction of the absolute initial pressure: and let the clearance volume be c, expressed as a fraction of volume swept by piston + clearance. Then he proposed to show that instead of the best ratio of expansion in an ideal engine being $\frac{1}{b}$, it was more nearly $\frac{1}{b+c}$. First, let the expansion be supposed to take place in one cylinder. In Fig. 20, OA was initial pressure, O D back pressure; $\frac{O\,D}{O\,A} = b$.

O C was clearance volume, C B swept volume; $\frac{O C}{O B} = c$. A E was weight of steam in the cylinder at cut-off. It might be taken as the quantity of steam spent per stroke, though more strictly that quantity was A E − D C. The engine diagram G F H K L might be taken as, very approximately, the whole diagram A F H B O, *minus* A C, *minus* D B. The error was in subtracting the rectangle D C twice instead of once. Then, expressing everything in terms

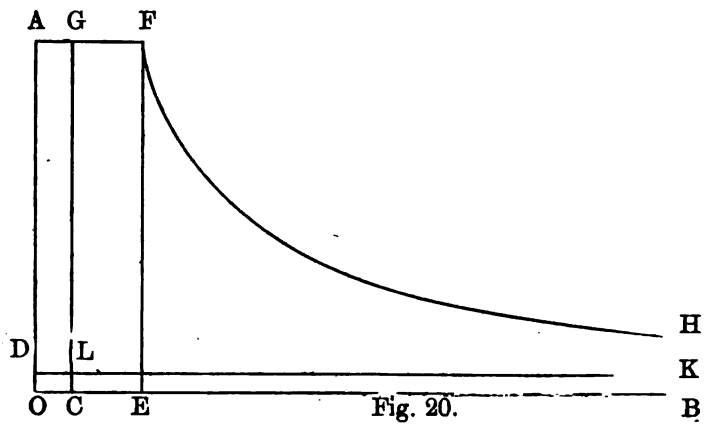

Fig. 20.

of the initial rectangle A E, it might be said that approximately the power obtained from a given weight of steam was

$$W = 1 + \log n - n b - n c,$$

n being the real ratio of expansion $\frac{O B}{O E}$. The maximum value of this was found by differentiating and equating to zero. Thus $\frac{dW}{dn} = \frac{1}{n} - (b + c) = 0$. Therefore $n = \frac{1}{b + c}$. Now the presence of internal condensation in the cylinder must surely make the best ratio of expansion *less* than in the ideal non-conducting cylinder, and friction would make it still less, if the B.H.P. and not the I.H.P. were taken. Therefore there were two considerable reductions (not calculable by theory) to be made from the ratio of expansion

found above. Taking the non-condensing Willans engine first quoted by Mr Royds, b would be about ·12, and assuming the clearance at ·05, the ideal ratio for best economy would be $\frac{1}{\cdot 17} = 5{\cdot}88$. It was not surprising to find that in the practical engine the best ratio was about 4·65. Again, in a condensing engine using steam of about 150 lbs., the back pressure would generally have a value of about ·02, and the clearance about ·05. The ideal ratio was then 14·3. Bearing in mind condensation and friction, was it any wonder that the least steam per B.H.P. was got with 8 or 10 expansions? It was possible to reduce the back pressure to ·01, and the clearance (by putting the valves in the cover, or other artifice) to ·03. The ideal ratio would then be about 25. But it was not enough to know where the most economical point was, but whether the consumption fell rapidly as that point was approached. In other words, whether the consumption curve was steep or flat in the neighbourhood of the minimum valve. Mr Royds had pointed this out in a very clear and admirable manner. As a matter of fact, the theoretical curves were very flat indeed near the minimum ordinate. He (Mr Matthey) had thought it worth while to plot the curve for two engines, both taking steam at 165 lbs. absolute, one having back pressure ·02 and clearance ·05, and the other back pressure ·01 and clearance ·03. The volume of 1 lb. weight of steam of this pressure was given in the tables as 2·71 cubic feet; from which it resulted that an imaginary engine without clearance, back pressure, expansion, or internal condensation (an engine of which the card was the rectangle AE of Fig. 20) would consume 30·7 lbs. of steam per I.H.P. hour. In what he had been calling an ideal engine, that was, one having clearance, back pressure, and n expansions, but no internal condensation, the consumption of steam was

$$\frac{30{\cdot}7}{1 + \log n - n\,(b + c)},$$

the logs of course being natural logs. In Fig. 21 these values

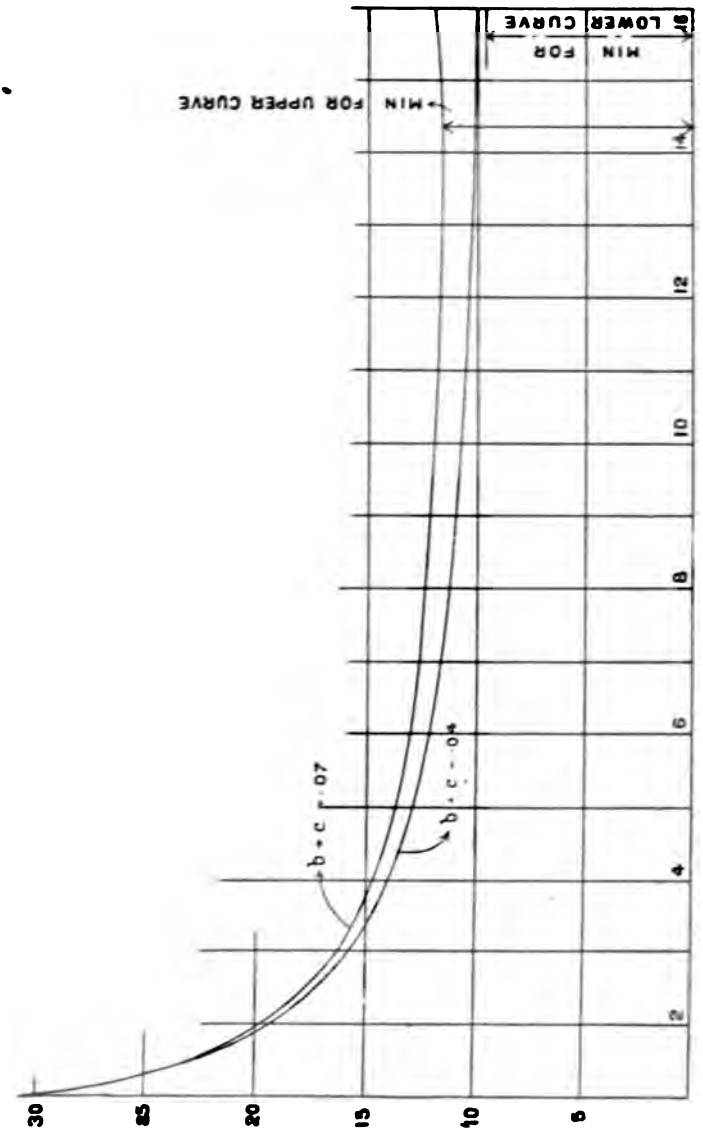
MIN FOR UPPER CURVE
MIN FOR LOWER CURVE
b + c = ·07
b + c = ·04
30
25
20
15
10
5
2
4
6
8
10
12
14
16

Fig. 21.

were plotted for different degrees of expansion for the two engines, the upper curve being that for the engine with more back pressure and clearance. The ordinates showed the steam consumption, while the abscissae showed the number of expansions. It would be seen that for the higher rates of expansion the economy increased very slowly. The minimum ordinate for the upper curve was shown in its proper place at 14·3 expansions: the minimum for the lower curve, which occurred at 25 expansions, a long way beyond the range of the diagram, to the right, had been shown to scale on the last ordinate, and was but little less than the consumption for 16 expansions. He was aware that the advocate of extreme expansion would make the objection—"That is all very well for a single cylinder engine, but I do not lose so much by clearance in my triple expansion engine. In Fig. 22, which represented the three cards combined

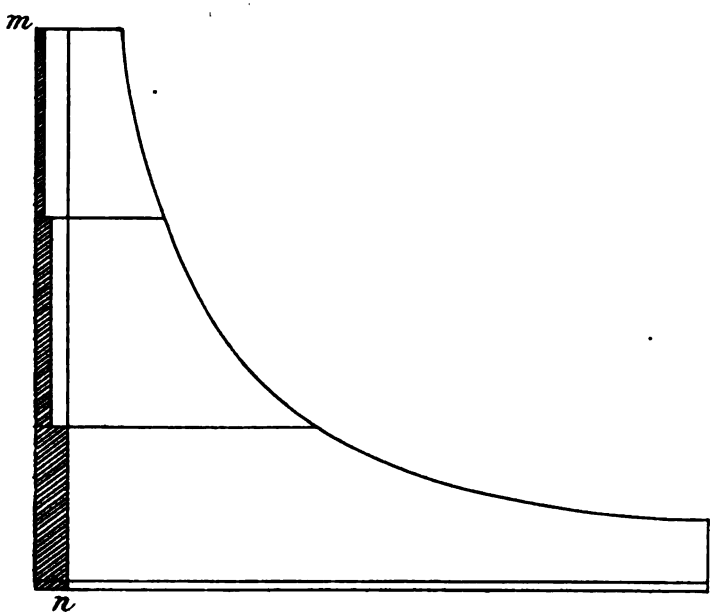

Fig. 22.

Mr C. A. Matthey.

in the well-known manner, I do not lose the rectangle $m\,n$ in clearance, but only the three shaded rectangles." But he (Mr Matthey) thought that in every case the loss of area by "drop" between the cylinders amounted to a good deal more than the area so saved. It was a fact that many Continental constructors made two-cylinder compound engines which rivalled, if not surpassed, in economy British three-cylinder compounds. In these the clearance was always very small, and the ratio of expansion not very great. The low pressure piston had an area seldom more than 3·5 times that of the high, often only 3 or less: one maker of repute, Bollinckx of Brussels, employed a proportion of cylinders of 2·3 times, and cut-off at half stroke in the high pressure engine, a ratio of expansion of only 4·6. Yet he claimed to effect the very highest economy. His clearance was less than 2 per cent. Farcot of Paris actually guaranteed a consumption of 13 pounds weight of steam in a *single cylinder engine using steam of 85 lbs. gauge pressure!* He expanded 10 times, or less. In Britain the marine engine was the high caste engine, and set the fashion. Owing to the necessity of reversing, the four-function slide valve was retained, admitting and releasing steam from both ends of the cylinder, and actuated by the link motion. The consequence was a large clearance: some piston valves had a truly shocking amount, in some cases 10 per cent. Of course it was easier to design a gear with separate steam and exhaust valves for each end of the cylinder (four in all) for a non-reversing engine than for a reversing one, but the difficulty was not insuperable. Such a gear would be no doubt more expensive than the usual slide valve, but as not only Mr Royds but also these Continental constructors had shown, that the low pressure cylinder volume need only be about one-half as great as standard British practice for the same power, the whole engine might be no more expensive. Suppose one followed the lead of Monsieur Farcot, and adopted the single engine, then instead of, say, the regulation diameters of 30, 50, and 80 inches, one would have three simple cylinders of about 35 inches diameter. The prospect opened up was most promising.

Mr C. Humphrey Wingfield.

Mr. C. HUMPHREY WINGFIELD observed that the Author had presented the data which he had collected in a way which was likely to prove most useful for reference. He had little doubt that the results, as regarded the mean effective pressure corresponding to the best economy per *indicated* horse power were of very general application. He was not sure whether the Author intended to convey that his determinations of the best mean effective pressure for *brake* horse power economy were also applicable to engines generally, or only to the particular size of engine experimented with in each case. He (Mr. Wingfield) did not himself consider they were of general applicability. The Author, in constructing the upper curve in Fig. 1, for instance, had assumed a constant friction loss of 6 I.H.P. This might be correct for the particular engine tried, since it was nearly true that the horse power wasted in friction per revolution per minute was constant for a given engine. It would not be true for larger or smaller cylinders than that tested, as the I.H.P. per revolution per minute wasted in friction *increased* with an increase of the cylinder dimensions. He thought it would be preferable to express the friction deduction in terms of mean effective pressure; though a curve on this basis would also be inapplicable to more than one size of engine, as the mean effective pressure deduction for friction *decreased* with increasing cylinder dimensions. The upper curve in Fig. 1 did not, he thought, show the most economical mean effective pressure for an engine of a given B.H.P., but merely what was the most economical B.H.P. at which the particular engine tested could work, since each point on the curve represented a different B.H.P. This was not the problem usually placed before a designer, who had to provide for a definite B.H.P. under the most economical conditions. In round figures the following results were obtained from the upper curves in Fig. 1.:—

M.E.P., - - -	46	44	37
I.H.P., - - -	40	38	32
I.H.P. – 6 - - -	34	32	26

Thus the curve gave 44 lbs. as being a better mean effective pressure for a 32 B.H.P. engine than 37 lbs. would be for a 26 B.H.P. engine, but it did not, he thought, show the 44 lbs. would necessarily be the best mean effective pressure for a 26 B.H.P. engine. The Author suggested that (I.H.P. − 45) might be taken as representative of the useful I.H.P. in an ordinary mill. Even if correct for the 150 I.H.P. engine referred to in the text a mill with double or treble that power would require a larger engine, and a larger figure would have to be substituted for the 45. Moreover, the suggested deductions of 15, 22·5, 30, etc., I.H.P. from the 150 given on page 282 would mean less and less power delivered to the machines. A purchaser would want the same B.H.P. to be delivered, so that a different size of cylinder was required for each case, and the B.H.P. curves did not appear adapted to give directly the information wanted. However, the lower curves in each figure contained data which could be used for the construction of a new B.H.P. curve, allowing for the varying size and friction of the engine, for any particular case, and he felt grateful to the Author for the trouble he had taken in their preparation.

Captain H. RIALL SANKEY, R.E. (ret.), was of opinion that the question of the most economical mean effective pressure for reciprocating steam engines was a subject of great importance, and one that, so far, had not been sufficiently ventilated. He was glad to have had an opportunity of reading the Author's paper, as he was at the moment engaged on a similar enquiry for the Engineering Standards Committee. He agreed generally with the Author that, as a rule, greater economy could be obtained by employing higher mean pressures than were usual, but he thought that he had not sufficiently differentiated between the various types of engines in the conclusions given on page 288. Non-condensing engines had a best mean effective pressure, referred to the L.P. cylinder, varying from 40 to 50 lbs. per square inch, according to the admission pressure; in this he agreed with the Author. But in the case of condensing engines, the Author

made no difference in respect either of the type of engine, whether compound, triple, or quadruple expansion, or again as regards the vacuum, whether poor or good. Thus, referring to Fig. 2, it would be found, from the data given in Willans' condensing trials, that in the case of a triple engine there was very little difference in steam per I.H.P. for mean pressures varying from 26 to 34 lbs. per square inch, and the best point was probably at about 28 lbs., which was lower than the best mean pressure for the compound engine. A comparison of Figs. 3 and 4 illustrated the same point; in Fig. 3 the best mean effective pressure was 36 lbs., whereas in Fig. 4, for a quadruple expansion engine, it was as low as 27 lbs. The general rule was that, for the same admission and exhaust pressures, the greater the steam per I.H.P., owing to imperfections in the engine, the greater was the mean effective pressure at which the engine gave the best result. In order to illustrate this matter still further, he had prepared Fig. 23, in which the admission pressure was taken at 150 lbs. per square inch by gauge (or 165 lbs. absolute), and the back pressure was taken at 3 lbs. per square inch absolute. The curve marked *d* showed the steam per I.H.P. plotted on a mean pressure base for an ideal engine in which there were no losses due to condensation, leakage, radiation, etc., the *only* loss, therefore, in comparison with the perfect or Rankine engine, was that due to cutting off the toe of the diagram. When the steam was expanded to the back pressure the ideal engine became a Rankine engine, and the steam per I.H.P. was 9·48 lbs. per hour, and the mean pressure 15·45 lbs. per square inch, as shown at the point marked "Rankine Engine" in Fig. 23. The greater the amount of toe cut off, the less would the steam be expanded, and obviously the steam per I.H.P. would be increased as well as the mean pressure. If the steam were expanded below the back pressure, the mean pressure would be reduced and the steam consumption increased, as shown in Fig. 23, to the left of the Rankine engine. It would be seen that the steam per I.H.P. became less as the mean pressure diminished, up to

the Rankine engine which gave the best steam per I.H.P. as would be expected. Curve *a* had been plotted from Fig. 3, Plate XII., and it was found that at the lowest steam comsumption per I.H.P. (the point marked by a circle) the efficiency ratio *

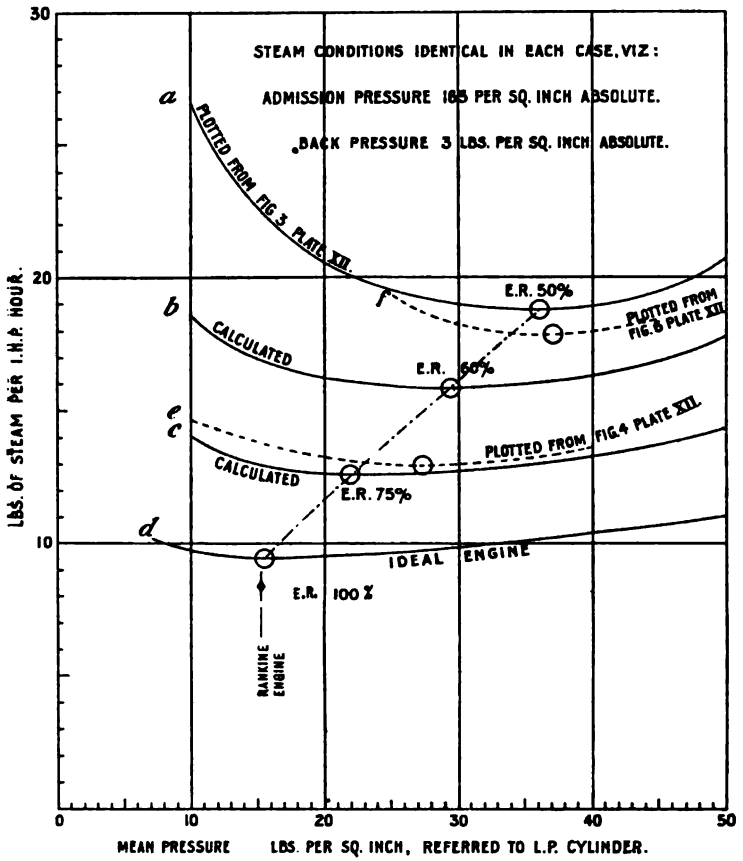

Fig. 23.

*The "Efficiency-Ratio" is the steam consumption of the Rankine engine divided by the steam consumption of the actual engine. See also Report of the Committee on the Thermal Efficiency of Steam Engines, p. 296, Minutes Proc. Inst. of Civil Engineers, Vol. CXXXIV.

(or E.R.) was 50 per cent. Several points on the curve had been selected and the E.R. calculated for each. The results were plotted, as shown by curve *a* in Fig. 24, together with the E.R.'s for the

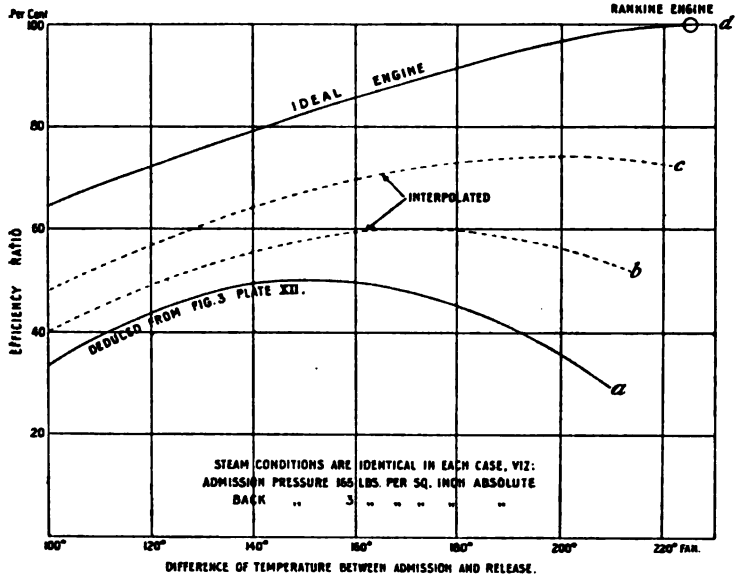

Fig. 24.

ideal engine, which were plotted on curve *d*, using the difference of temperature between admission and release as a base. The E.R. curves, *c* and *b*, for two intermediate engines, Fig. 24, had then been interpolated, as shown by the dotted curves, and the corresponding steam consumptions calculated by the help of the "Energy (or Temperature-Entropy) Chart." The consumption curves, *b* and *c*, in Fig. 23, had been obtained from these efficiency ratio lines. Curve *c* could be taken to represent an economical engine, and curve *b* a moderately economical engine. The lowest steam consumption was in each case marked by a circle, and it would be seen that the better the economy the lower the mean pressure at which the best economy occurred. This result was confirmed by the dotted curves, *e* and *f*, plotted from Figs. 6

and 4, Plate XII. There appeared to be a misprint at page 285, where the Author said that the economical range of mean effective pressure is less for the condensing than for the non-condensing engine. "Less" should be read as "greater," as would be seen by referring to conclusion 4, page 288. On the other hand, a comparison of Figs. 1 and 2 would indicate that "less" was correct. This comparison, however, was not justified, because Fig. 1 referred to a compound non-condensing engine, and in order to assimilate the ranges of temperature, should have been compared with a triple-expansion condensing engine, in which case, as already stated, the range of almost equal economy was from 26 to 36 lbs., and therefore greater than in the case of the non-condensing engine.

Mr W. Sisson (Gloucester) remarked that this paper was calculated to be very interesting and instructive to all steam engine designers. As far as his experience went, it fully confirmed the Author's statement that, in very many cases engines were put down too large for their work, owing to the fact that too much regard had been paid to steam consumption per I.H.P., instead of basing the estimate of engine capacity required on considerations of power delivered at the driving point where no further information was available, or where electrical duty was concerned, on electrical H.P. delivered to the dynamo terminals. Fig. 25 showed a recent result from a 90 B.H.P. Sisson engine, from which it would be seen that with only 100 lbs. pressure and atmospheric exhaust, the most economical grade, if B.H.P. were taken into account, was with a referred pressure of about 26 lbs. per square inch, while when the electrical output was taken into account the most economical point of performance rose to about 32 lbs. per square inch. Fig. 26 exemplified the considerable rise in the referred pressure for economy with higher pressure of steam, in this case the pressure being 150 lbs. with atmospheric exhaust, and the most economical consumption per B.H.P. hour at about 55 lbs. referred. In both these engines the system of governing used was that of controlling both the H.P.

Fig. 25.

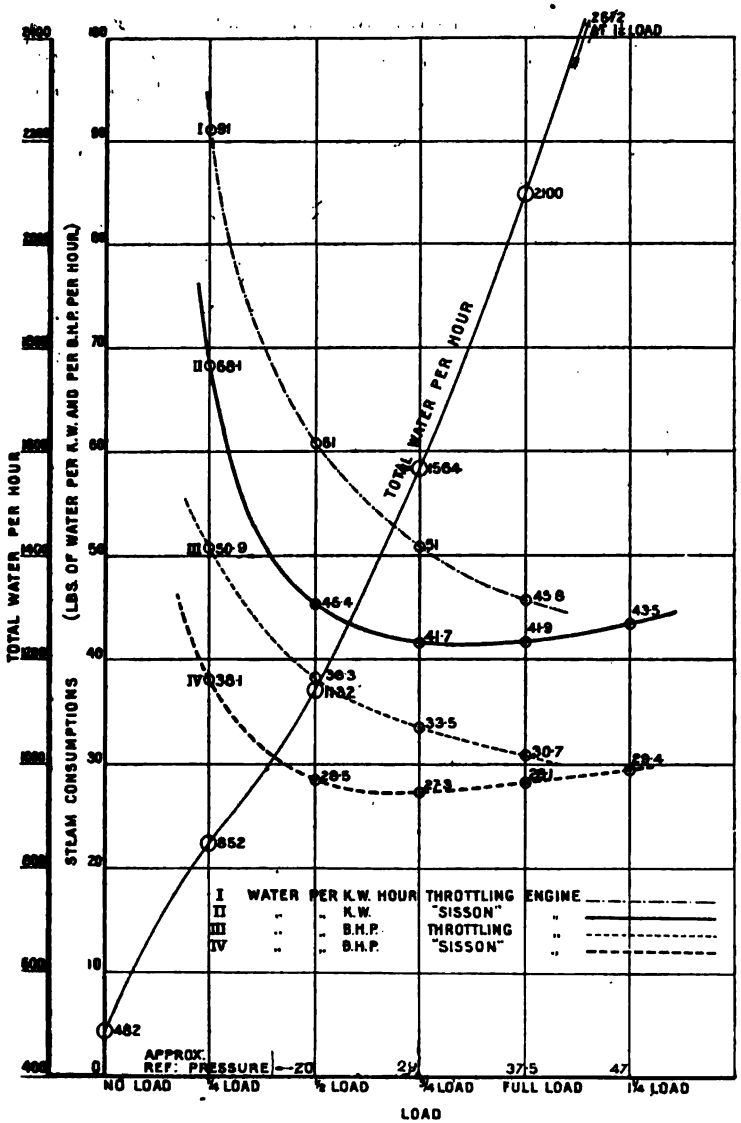

Steam Consumption Curves of 90 B.H.P. "Sisson" Engine, 100 lbs. W.P., Non-condensing Exhaust, Direct Coupled to 50 K.W. "Silvertown" Generator: Compared with the best Throttle Governed Engine offered for the same output.

and L.P. valves by the automatic expansion shaft governor. It was due almost entirely to this that there was secured a much wider range of economical performance than could be obtained with a throttling engine, where the most economical performance

Fig. 26.

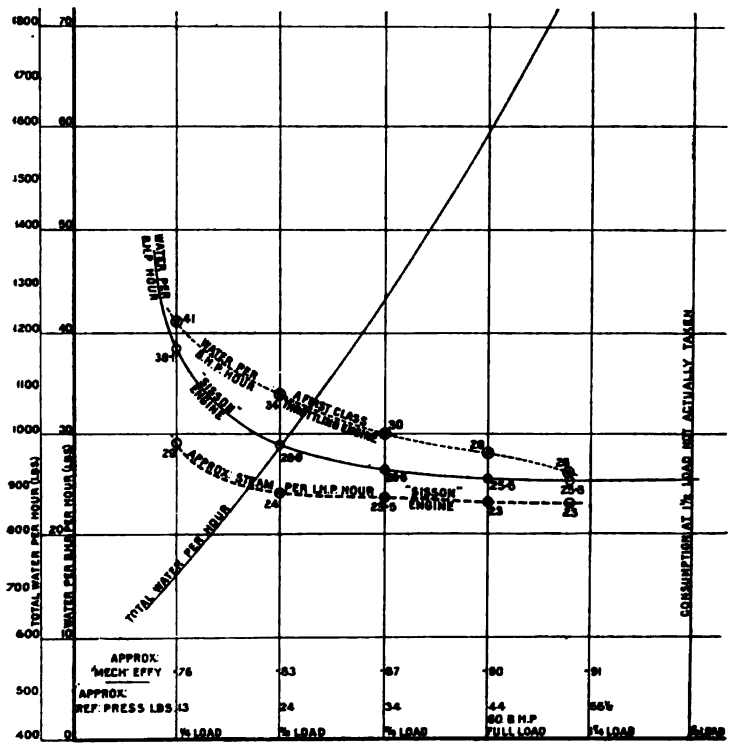

Consumption Curves of 10½" × 6" "Sisson" Engine, 150 lbs. W.P. Atmos Exhaust, No. 628, and a First-class Throttling Engine.

was at or about full load. With this system of expansion governing, the receiver pressure was kept up, and the power in the cylinders maintained very closely equal at different loads, as would be manifested by Fig. 27, which showed a set of diagrams at different loads in which the distribution was entirely affected by

Fig. 27.

INDICATOR DIAGRAMS OF "SISSON" ENGINE.

"D.C. 11" SIZE.

ATMOS: EXHAUST

TAKEN FROM ENGINE SUPPLIED TO MESSRS SIEMENS BROS. LTD. WOOLWICH ENGINE CONTROLLED UNDER ALL CONDITIONS OF LOAD BY SISSON'S PATENT AUTOMATIC EXPANSION CRANKSHAFT GOVERNOR.

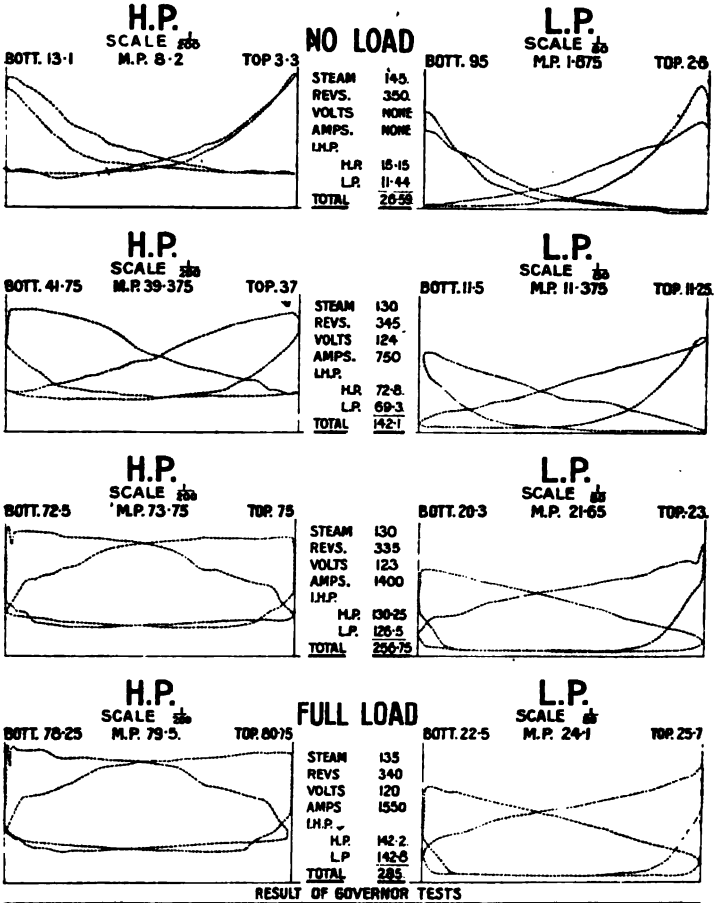

RESULT OF GOVERNOR TESTS

LOAD THROWN ON	R.P.M. BEFORE CHANGING.	MOMENTARY CHANGE IN R.P.M.	SETTLED CHANGE IN R.P.M.	LOAD THROWN OFF	R.P.M. BEFORE CHANGING	MOMENTARY CHANGE IN R.P.M.	SETTLED CHANGE IN R.P.M.
600 AMPS	350	6	4 TO 5	600 AMPS	345	5	5
1100 AMPS	350	9	4 TO 5	1250 AMPS	345	15	5

the automatic expansion governor, the stop valve not being touched. It would be seen that owing to the compression in both the cylinders, the final pressure of compression and the consequent temperature of that portion of the cylinder, piston, etc., which was exposed to the entering steam, was fairly high, slightly higher even at the lower loads than at the higher loads, the consequence being that initial condensation was greatly reduced. This system of governing not only gave, as would be seen from the comparative curves, good results at different steady loads, but the thermal effect above mentioned was very much accentuated when the duty was constantly and largely varying, as in electric power or traction plant. In such a case, if throttle governing were used, the pressure in the whole engine on the engine side of the throttle valve, and the temperature, would be correspondingly low at low loads, so that when a heavy load came on, the first effect of the entering steam was to give up its heat to raise the temperature of the surface with which it came into contact, so that heavy condensation took place; and from the fact that this condensation water did not pass into the exhaust entirely as water, but was partly flashed off into steam, it formed a most efficient heat carrier from the boiler to the exhaust. In the case of automatic governing controlling both valves, this action did not take place, and the consequence was that, favourable as were the results of this system of governing, compared with throttle governing at different *steady* loads, the comparative results were much more favourable in the case of power or traction plants having *constantly* and largely varying loads. In these plants also it was generally quite practicable to afford a very large margin for a heavy overload without sacrificing economy at the normal and average loads, which, of course, could not be done with throttle governing, except by the use of a bye-pass, automatic or otherwise, and then the distribution of power was not good and the load on the L.P. cylinder unduly increased proportionately. This thermal effect above mentioned, due to compression, was indicated in a very interesting way by the configuration of the curve of total water in Fig. 25,

which it would be observed had a point of inflexion in the lower part, and at first he considered this very doubtful, but the experiments were most carefully made, and as all the consumptions were measured by means of a surface condenser, and the water weighed upon a weighing machine, there was no doubt as to the accuracy of the result. The dropping of the curve of total water, therefore, could only be explained by the superheating which was secured with the very early cut-off and the consequent high compressions in both cylinders which were involved at the no load position. The natural conclusion from the paper, and in which one's own experience led one to concur in the fullest degree, was that in power and traction plants, where the maximum overload far exceeded the average output, say in the ratio of two to one, it was often important to make the engine as small as possible consistent with only being able to do the maximum load, and with very flexible automatic expansion governing, as exemplified above, the engine would not be too small to work economically at the average output, which, of course, was what was desired to be obtained. A moderate, or even comparatively large, rise of consumption at the greatest overload was entirely unimportant, as the duration of these loads was so short. The only criticism that it occurred to him to make on the paper was that he was inclined to think on the whole that the range of economical performance in condensing engines was more, instead of less, than in non-condensing engines (of course he quite agreed that the non-condensing engine had a best mean effective pressure considerably higher than the condensing engine, this followed naturally from its higher exhaust pressure). He also considered the diagram factor should be applied to the *gross* mean calculated pressure (measured from zero) and *before* deducting the mean back pressure, seeing that the influence of wiredrawing and other conditions, which lowered the steam line of the diagram, were not largely affected by the conditions subsisting simultaneously on the *other* side of the piston, where the lower line of the corresponding diagram was being indicated. If this method of using diagram factors were adopted no difficulty

would arise in the application whether a small or a very high back pressure were involved. In the latter case, as for example in the high-pressure cylinder of a compound engine, if the ordinary use of the diagram factor were adopted, it was quite possible to obtain an apparent net mean pressure while actually there might be a negative pressure, owing to the fact that, while there might be a positive difference between the mean back pressure actual and the mean total forward pressure calculated, wiredrawing or condensation might cause the actual mean total forward pressure to be so low that the difference would be negative. Further, illustrating the force of this contention:—

Let M_c be the calculated nett mean pressure,
M_a the attained mean pressure,
P_c the calculated gross mean pressure, and
B the mean back pressure,
K being the diagram factor.

Then the usual application would be

$$M_a = KM_c = K(P_c - B),$$

or

$$KP_c - KB,$$

from which it was clear that this usual mode of application of the diagram factor affected the back pressure to the same extent as the calculated gross mean pressure. This was evidently incorrect, as, for example, with atmospheric exhaust, the atmospheric pressure was not reduced to the extent of the effect of the diagram factor. To illustrate this, let a case be assumed where the engine exhausted (as was sometimes the case in manufacturing operations) against a back pressure of from 10 to 12 lbs. per square inch in addition to the atmospheric pressure, the total mean back pressure, including resistance of exhaust and compression corner, might be 30 lbs. total. Assuming a calculated mean gross pressure of 50 lbs., and a diagram factor even of ·7, the ordinary method would be as follows:—

$$(50 - 30) \times \cdot 7 = 14,$$

which gave a nett positive pressure of 14 lbs., whereas it was

evident on inspection that this could not be the case, and the method he had adopted, thus:

$$50 \times \cdot 7 - 30 = 5 \text{ lbs. nett positive pressure,}$$

would manifest this. In short, it was clear that the ordinary method of applying the diagram factor affected in an equal proportion the back pressure and the forward pressure, while the former certainly ought not to be the case.

Mr Royds, in reply, said that Dr. Mellanby's remarks were of exceptional value because he was well qualified by his experience and by his study of the steam engine problem to make an authoritative statement on this question of best mean effective pressures. As Dr. Mellanby said, the text-book methods of determining the mean effective pressure for any given conditions were generally lacking in real scientific achievement. How often one came across the statement in text-books, that—"Experience showed that the best results were obtained when the steam was expanded down to about 8 lbs. per square inch absolute in condensing engines." The use of the word "experience" gave to such statements a measure of importance which was entirely unwarranted. Dr. Mellanby's appeal for further facilities for steam engine research was worthy of the serious consideration of engineers. It was certainly a matter for organised and collective effort. Mr. Cleghorn called attention to the assumption that B.H.P. $= $ I.H.P. $- b$, where b was a constant. This was very nearly true for most high-class engines, especially when forced lubrication was employed. In Fig. 29 a particular example was shown, where it would be seen that B.H.P. $= 0{\cdot}96 \times$ I.H.P. $- 13$. In another case, that of a compound engine, the connection was found to be expressed by B.H.P. $= 0{\cdot}99 \times$ I.H.P. $- 5{\cdot}7$. Mr Cleghorn also referred to the effect which frictional resistance had upon the best mean effective pressure, and he compared the operating conditions of a marine engine with that of a mill engine. In the Author's opinion Mr Cleghorn's conclusions on this point should be reversed. It could be stated as an axiom that any piece of me-

chanism driven by an engine of any particular power had no influence upon the best mean effective pressure, unless the dimensions of the mechanism were a function of the engine cylinder dimensions. In the case of a mill engine anything beyond the engine fly-wheel was not usually a function of the cylinder dimensions, where a given power had to be transmitted. In the case of the marine engine of any particular power the diameter of the intermediate shaft was usually a function of the cylinder diameters, and therefore the power delivered to the propeller in relation to steam consumption

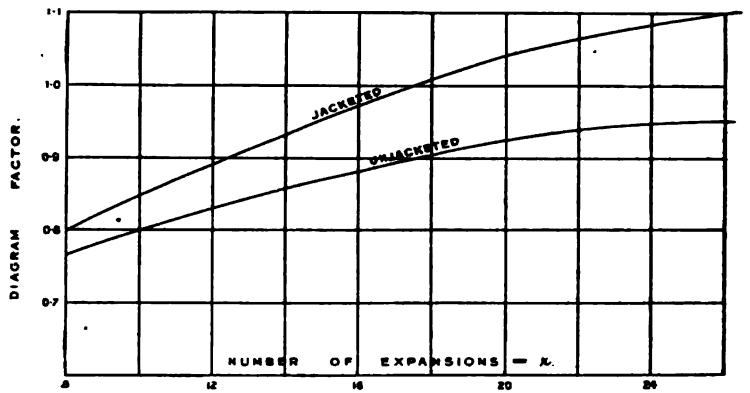

Fig. 28.

should determine the best mean effective pressure. In the mill engine the steam per B.H.P. hour should be the determining factor; therefore such an engine should have a lower best mean effective pressure than a similar marine engine. In accordance with Mr Cleghorn's request the Author had, in Fig. 28, given the diagram factors which he used in his calculations, and which were obtained from Dr. Mellanby's paper. The law connecting the indicated weight of steam (I) at cut-off in the H.P. cylinder, with the actual weight of steam used (W) in Dr. Mellanby's unjacketed tests was $\frac{I}{W} = 0{\cdot}825 - 0{\cdot}0118 \times r$, where r was the number of expansions. Mr Andrews appeared to have great

faith in the Sibley College engines, and in the published results of tests made on them. Had Mr Andrews been a little less biassed, he would have examined the results more closely before

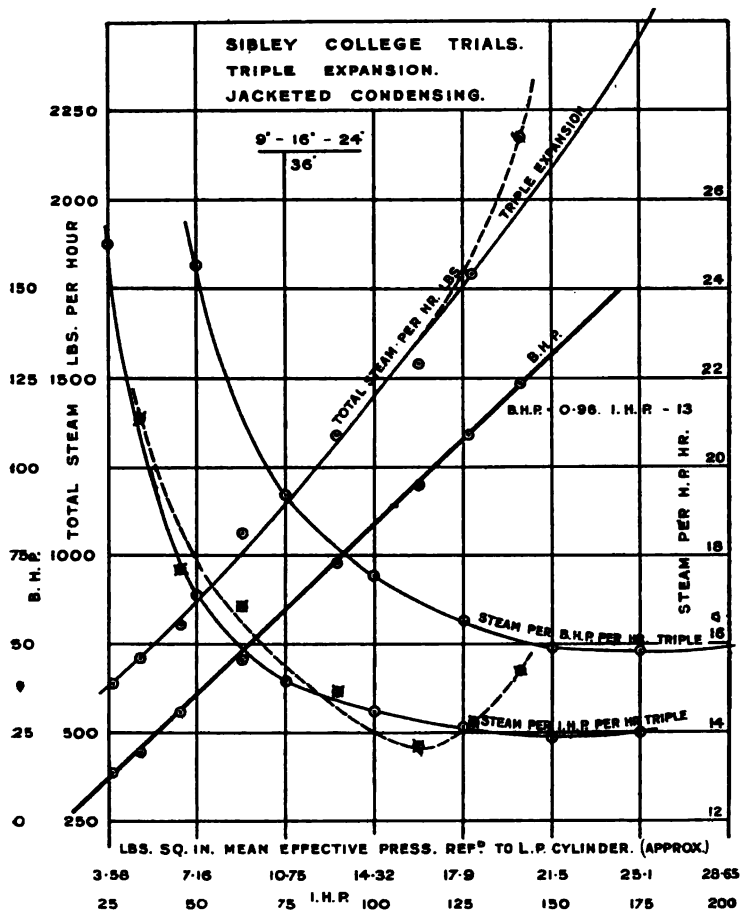

Fig. 29.

proposing 18 lbs. per square inch as a best mean effective pressure with saturated steam at 120 lbs. gauge. A close examination of the recorded results and conclusions of the

above-mentioned trials showed several discrepancies. It would be sufficient for the present purpose to give one example. Fig. 29 showed the results of the jacketed triple-expansion condensing trials quoted by Mr Andrews. The recorded total steam consumptions per hour were plotted on an I.H.P. base, and a mean curve drawn through the points, this being shown by the full line. It would be noticed that the highest point had been neglected in drawing this curve, for reasons afterwards given. Assuming the full line curve to represent the corrected total steam consumption per hour, the steam per I.H.P. hour and per B.H.P. hour have been calculated from it and the results plotted. For the sake of argument assume that the plotted total steam per hour at the highest load to be correct, and the dotted line drawn through it to be the continuation of the total steam per hour curve. If this dotted line were continued upwards it would become practically vertical in the neighbourhood of 150 I.H.P., and the corresponding cut-off in the H.P. cylinder (obtained from the tabulated results) would be about 50 per cent. of the stroke. This meant, therefore, that 150 I.H.P. would be about the maximum power obtainable at the particular speed and steam pressure for the trials, no matter how late the cut-off was made in the H.P. cylinder. The absurdity of such a result showed at once that the highest point in the total steam per hour series did not belong to the remainder of the series of points. The total steam per hour curve was not shown by the recorder of the Sibley College trials, and apparently the steam per I.H.P. per hour was obtained and plotted without the aid of such a mean curve. The recorded steam per I.H.P. hour curve, shown dotted, with the plotted points were reproduced in Fig. 29. This represented about 16 lbs. per square inch as the best mean effective pressure considering the steam per I.H.P. hour curve. The steam per I.H.P. hour curve obtained from the total steam per hour curve indicated about 22 lbs. as the best mean effective pressure, the discrepancy being obvious. One could judge

for himself as to what value could be attached to the recorded conclusions of the Sibley College trials, for which Mr Andrews had such admiration. Either Mr Andrews had not studied Prof. Weighton's paper on "Receiver Drop in Multiple Expansion Engines," or he had not realised the significance of the results obtained by Prof. Weighton, who showed that the best point of cut-off in the I.P. and L.P. cylinders depended only upon the cylinder ratios. The best cut-offs in these cylinders were practically independent of the cut-off in the H.P. cylinder. He further showed that with ordinary cylinder ratios there might be considerable variations made in the cut-offs in the I.P. and L.P. cylinders on either side of the best, without materially influencing the steam consumption per horse power hour. Mr Andrews' proposal to test a simple engine between particular pressures, and then apply the results to multiple expansion engines was of little practical importance. The results would certainly be interesting, but to test the low pressure part of an engine with ordinary saturated steam of constant pressure would not determine the best cut-off when it was running as part of a multiple expansion engine. The Owens College engine with separate brakes had certainly some advantages, but these separate brakes were not essential to the solution of the steam engine problem. Mr Andrews' statement regarding past warship practice was hardly relevant. Unless full data were available, statements as to the best mean effective pressures must be accepted with strict reserve. Referring to Mr Rudd's remarks, the Author stated that the word "economy" had been used in the paper to denote steam consumption per unit of power per unit of time; but he quite realised that a rigid definition of economy ought to include all other factors besides steam consumption. He did not, however, think it necessary to give any definition because, unless otherwise stated, the ordinary meaning usually referred to steam consumption only. Mr Rudd found fault with the Author for not giving greater prominence to Mr Longridge's

Mr Royds.
superheated steam engine tests. He wished to emphasise the fact that, instead of showing a very low mean effective pressure as the most economical, this engine gave the greatest economy at a comparatively high mean effective pressure. It had been repeatedly stated that with 120 lbs. steam pressure a multiple-expansion condensing engine using saturated steam should show the best result in the neighbourhood of 20 lbs. per square inch mean effective pressure; and behold, a large engine using highly superheated steam showed nearly 30 lbs. per square inch as the best. There was no doubt but that the result quoted by Mr Rudd, viz., 21 lbs. mean effective pressure with steam consumption under 9 lbs. per I.H.P. hour was a very good performance, but could Mr Rudd say what difference there would have been in steam per B.H.P. hour if the mean effective pressure had been 30 lbs. instead of 21 lbs. per square inch. He was fully aware of the difficulties connected with the testing of steam engines, referred to by Mr Gilchrist. Besides a large capital expenditure, a highly trained technical staff was an absolute necessity in order to get thoroughly reliable results. At the same time, he was of opinion that, either from lack of technical advice, or because of a certain measure of supineness, a large number of power engineers did not take advantage of the results of tests which had been made and published for their benefit. When the time, labour, and money which many firms were spending to develop the steam turbine was considered, and compared with the apparent neglect of the economical consideration of the reciprocating steam engine, one was compelled to come to the conclusion that the best had not yet been obtained from the ordinary reciprocating engine. In his opinion it was time that organised efforts were made to determine what the reciprocating engine could and could not do. Exhaustive experiments on large engines with different types of valves were necessary for a complete solution. If the engineers of the district, acting through this Institution, could be persuaded to co-operate with the Technical College authori-

ties, in providing sufficient funds and facilities for such a series of experiments, the results would be of incalculable benefit to engine builders. There were several land steam engines in the district power stations comparable in dimensions with large marine engines. Such engines were coupled up to dynamos or alternators and were only running for a limited period daily, so that it would be a comparatively easy matter to arrange a series of trials on such engines, with a very moderate expenditure. Concerning Mr Gilchrist's inquiry as to the economy of quadruple expansion relative to triple expansion engines, the reference was to the brake horse power record. The superiority in steam consumption of the quadruple over the triple engine was sometimes appreciable if the steam per I.H.P. hour only was considered, but this superiority was much reduced, and in some cases might even vanish, when the steam per B.H.P. hour was compared, because of the higher mechanical efficiency of the triple expansion engine. The table of mean effective pressures at no load given by Mr Longridge was of considerable interest. The chief objections to be urged against the method of obtaining these were—First, A low steam pressure was generally used, whereas, when governing by variation of cut-off, the initial steam pressure in the cylinder was practically constant. Second, The areas on the indicator cards at no load were comparatively small, and thus there might be considerable errors in the measurement of power at no load. In any case, whilst the Author was not particularly anxious to justify his adoption of a 6 lbs. mean effective pressure as a loss from the cylinder to the driving point, when selecting a value he had in mind the different sizes of engines, and the various conditions under which they had to work. For example, in the case of an engine driving a dynamo, the 6 lbs. per square inch included losses in the dynamo. Since the dimensions of the dynamo for any given power and speed were not dependent upon those of the engine, the losses in the dynamo had actually nothing to do with the engine, but it was convenient

Mr Royds.
to include them in the engine losses. The marine engine might be taken as another example. The diameter of the intermediate shaft was a function of the cylinder diameters, and the transmission losses should be considered right up to the propeller, but should not include the propeller losses. In any steam installation the question of increased demand for power at some future time was certainly one which should be allowed for in designing an engine, and, as suggested by Mr Longridge, where additional demands for power were likely to occur only at very long intervals, it would be most economical to speed up the engine when increased power was required, altering the driving to suit new conditions. The mean effective pressure which he (the Author) suggested did not involve any real difficulty with regard to obtaining a proper cut-off in each cylinder of multiple expansion engines, besides which, late cut-offs, as compared with early cut-offs, reduced the travel of the valves when slide valves were used, gave more uniform turning moment, easier running, easier starting, and better distribution of stresses. Mr Matthey's remarks were both interesting and suggestive. Considering only the possible influence of the clearance spaces, Mr Matthey showed that the effect of clearance alone was likely to be such as to cast doubt upon the still common idea that to expand down to the back pressure was desirable, if it could be attained. In the paper he had used the term "number of expansions" to mean

$$\frac{\text{Volume swept out by L.P. piston per stroke}}{\text{,, ,, ,, H.P. ,, up to cut-off.}}$$

Mr Matthey had not used number of expansions in quite the same sense, but his comparisons were in no way less striking because of this difference, and his remarks with reference to the practice of some Continental engine builders would come as a great surprise to those British engineers whose faith in large expansions had become sanctified by repetition. Mr. Wingfield took exception to the method of allowing for losses be-

tween the engine cylinder and the point of driving. Although the mechanical efficiency of any type of engine increased with the size of the engine, this increase at full load with size of engine was comparatively small, especially with forced lubrication. He claimed that the results stated in the paper were of general application, with the qualifying conditions mentioned in the summary of conclusions. Whatever the best mean effective pressure might be for any type of engine, he claimed that size had only a small influence on the best mean effective pressure. Hence, so far as this point was concerned, it was not of much consequence to the designer what power the engine had to develop. When the expression (I.H.P – 45) was stated as being representative of ordinary mill or workshop conditions, it was, of course, understood to refer to the engine under consideration. Although a larger horse power than 45 would be lost with a similar but larger driving arrangement, if the engine was larger in proportion the mechanical efficiency would be practically the same. Captain Sankey's large experience in the design and testing of steam engines gave special importance to his recommendation of higher mean effective pressures than were usually adopted by engineers in this country. With regard to differences in vacuum between different installations, he did not consider that the results would justify him in making comparisons or allowances for such small differences of vacuum. Captain Sankey compared different engines on the basis of steam or heat consumption per I.H.P. hour. Although the comparisons were probably correct as far as they went, it should not be overlooked that mechanical efficiency was an important factor. The greater the number of cylinders for any given power the lower would be the mechanical efficiency. If the basis of comparison was steam or heat consumption per B.H.P. hour, the best mean effective pressure for a triple or quadruple expansion engine would not be much different to that for a compound engine of the same power, working under the same conditions. Mr Sisson stated very clearly the circum-

Mr Royds.

stances in which the variable expansion governor was superior to the throttling governor. The diagrams of steam consumptions of the Sisson non-condensing engines were very interesting and confirmed the results arrived at by the Author. The difference between the steam consumptions per H.P. hour in the throttling engine and in the variable expansion engine depended upon the conditions for which the engine was designed. Mr Sisson's opinion as to the variation in economy of non-condensing as compared with condensing engines appeared to differ from the conclusions arrived at by the Author. It would have been interesting if Mr Sisson had given examples of tests upon which he based his opinion on this point. At the end of the paper he proposed a straight line connection between best mean effective pressure and initial steam pressure for single cylinder engines, although Fig. 18 did not show this in a conclusive manner. During the last session the senior students working under his direction in the Motive Power Engineering Laboratory of the Glasgow and West of Scotland Technical College made a large number of tests upon a small single cylinder engine. The results obtained bore out the conclusions stated in the paper, and they also showed conclusively the straight line law connecting best mean effective pressure for single cylinder engines. In conclusion he wished to emphasise the need for further experiments on the subject of best mean effective pressures, as well as on other steam engine problems. Besides being a matter of scientific interest, it was also of extreme importance from economical considerations. The expressed opinions of men of special experience like Dr. Mellanby, Captain Sankey, Mr Longridge, and Mr Sisson should disarm all suspicion of the economical advantages to be derived from high mean pressures.

On the motion of the PRESIDENT, Mr Royds was awarded a vote of thanks for his paper.

STUDENTS' SECTION.

TRAMWAY AND RAILWAY ELECTRIC TRACTION.

By Mr GEORGE G. BRAID.

SEE PLATES XVI., XVII., AND XVIII.

Read 5th February, 1907.

INTRODUCTION—SCOPE OF PAPER.

In a short paper one cannot do full justice to such a subject. All the branches which are not peculiar to electric traction alone, such as the generation and distribution of electrical energy, have therefore been left unconsidered. Even without these auxiliary branches, it has been found necessary to describe only the more important systems of electric traction in use in the largest tramway and railway concerns in this country and abroad.

A short statement of the general problem of traction is first given, and this is followed by a description of the methods adopted to solve the problem electrically. The latter part of the paper deals with the actual apparatus used in standard electric tramways and railways, including the permanent way or track; the conductor line from which the cars collect the electric current which drives them; and, lastly, the rolling stock which includes the car motors and controllers.

THE PROBLEM; SPEED-TIME CURVES.

The problem of all systems of traction is to move a vehicle from one place to another. In the case of tramways and railways, the cars and trains go through a cycle of operations between every two stops.

First—The car or train is accelerated from rest; at first quickly, then more slowly, till a certain maximum speed is reached.

Second—This maximum speed may be maintained for a certain length of time.

Third—The driving power is cut off and the car or train is allowed to drift or coast, the speed gradually decreasing.

Fourth—The brakes are applied and the car or train is rapidly retarded, and finally brought to rest.

In addition to these four stages, there is usually a fifth; viz., a certain period of rest, after which the cycle is gone through again.

This cycle of operations can be represented by a curve, as shown in Fig. 1, which represents the speed-time characteristic of a train operated by continuous current electric motors.

A-B is the period of acceleration.
B-C, the period of constant speed.
C-D, the period of drifting or coasting.
D-E, the period of braking, and
E-F, the period of rest.

This speed-time curve is drawn for a train operating on the level; the effect of gradients is easily allowed for, down-gradients tending to increase and up-gradients to decrease the speed.

It is not necessary, of course, that this cycle should be always followed in the exact order given above; for instance, before the maximum speed is attained the driving power may be cut off and then afterwards applied again before the car or train comes to rest. An increase in the rate at which the car or train is accelerated will increase the area of the curve, or, what comes to the same thing, enable a given distance to be covered in less time.

With electric traction a much greater acceleration can be obtained than with steam traction, and for journeys with frequent stops this is a distinct advantage. The cause of this

greater acceleration is partly due to the fact that, for the same average power, electric traction motors can exert a much greater torque at starting than steam engines can; but in a much greater degree can the reason be ascribed to the improved distribution of the weight on the driving wheels. In the case of a train of carriages, each one of which is fitted with electric motors operated under the multiple unit control system, every wheel of the train is a driving wheel, and the tractive effort which can be exerted before slipping or skidding of the wheels takes place is naturally much greater than when the train is drawn by a single steam locomotive. It is by this increase in the effective adhesion between the driving wheels and the rails that the increased acceleration is obtained.

Horse Power Required.

The next important consideration after speed-time curves, is the horse power which is required to take a car or train up any gradient, at any desired speed. The complete determination of this question is somewhat complicated, but an approximate formula is easily obtained. This formula assumes the train or car resistance constant for all speeds, and neglects effects of curves. It will be found to be fairly correct for cars or trains on a straight track, running at moderate speeds.

The formula is deduced as follows:—

Let W = weight of car or train in tons.
S = speed in miles per hour.
x = per cent. gradient.
R = rolling friction in lbs. per ton weight.

Then the total horse power exerted is expended, firstly, in overcoming friction, and, secondly, in overcoming gravity, *i.e.*, in ascending the gradient, or (noting that 1 mile per hour = 88 feet per minute)

$$\text{H.P.} = \frac{88}{33{,}000}\ \text{S. W.}\left(\text{R} + 2240\ \frac{x}{100}\right)$$
$$= \cdot 00267\ \text{W.S.}\ (\text{R} + 22{\cdot}4\ x)$$

For tramway electric traction this may be written—

$$\text{H.P.} = \cdot 00267 \text{ W.S. } (30 + 22 \cdot 4\, x)$$

The figures given in Table I. have been calculated from this formula. These figures are those used for tramway and street railway work generally; but they are rather high for ordinary railway work, for which the formula would be.

$$\text{H.P.} = \cdot 00267 \text{ W.S. } (20 + 22 \cdot 4\, x).$$

The figure 30 in the former formula being substituted for 20 in the latter, because in railway working the train resistance, or tractive effort required to overcome friction, is considerably less than on an ordinary tramway track. Some additional remarks on the power required at starting, etc., will be made when dealing with the current taken by the electric motors under these conditions, but the above may be accepted as a good approximation to the power required for steady running.

As the electric tramway and railway systems in this country are nearly all operated by continuous current, this form of electric traction will be considered first.

The Electric Traction Motor.

A matter of extreme importance is the form of electric motor which should be used for traction work.

There are three forms of continuous current electric motor, namely, the shunt motor, in which the field windings are placed in "shunt" across the armature windings; the series motor, in which the field windings are placed in "series" with the armature windings; and the compound motor, which has two sets of field windings, one in shunt across, and the other in series with, the armature windings.

Both theory and practice have decided that the series motor is the one best adapted to traction work. One thing in favour of the shunt motor is that, when coasting down hill, electric

Table I.

Horse Power, Per Ton Weight, Required to Take a Car or Train up Various Gradients at Various Speeds.

Per Cent. Gradient.	Miles Per Hour.									
	5	10	15	20	25	30	35	40	45	50
0	·40	·80	1·20	1·60	2·00	2·40	2·80	3·20	3·60	4·00
1	·70	1·40	2·10	2·79	3·49	4·19	4·89	5·59	6·29	6·99
2	1·00	1·99	2·99	3·99	4·99	5·98	6·98	7·98	8·98	9·97
3	1·30	2·59	3·89	5·18	6·48	7·77	9·07	10·37	11·66	12·96
4	1·59	3·19	4·78	6·38	7·97	9·57	11·16	12·76	14·35	15·95
5	1·89	3·79	5·68	7·57	9·47	11·36	13·25	15·15	17·04	18·93
6	2·19	4·38	6·58	8·77	10·96	13·15	15·34	17·54	19·73	21·92
7	2·49	4·98	7·47	9·96	12·45	14·94	17·43	19·93	22·42	24·91
8	2·79	5·58	8·37	11·16	13·95	16·74	19·53	22·31	25·10	27·89
9	3·09	6·18	9·26	12·35	15·44	18·53	21·62	24·70	27·79	30·88
10	3·39	6·77	10·16	13·55	16·93	20·32	23·71	27·09	30·48	33·87

energy can be returned to the line. This cannot be done with the series motor, but, as shown below, there are more important advantages on the side of the series motor which has caused its almost universal adoption for traction work.

Fig. 2 represents partly in section a standard electric traction motor. The main thing to notice is the compact way in which the motor is built. For its size, it has great power, and there is no space wasted. The whole motor is enclosed in a water-tight iron case.

Fig. 3 shows the characteristic curves of such a motor. These curves are obtained partly from tests and partly by calculation; and from them the performance of the motor under the various conditions of service can be predetermined; for example, the maximum speed that would be attained by the car on any gradient, the rate of acceleration under all conditions of service, and the retarding effect when the rheostatic brake is used. The curves shown in Fig. 10 have been so determined, and relate to a 12-ton car driven by two 30 H.P. motors—a car similar to the Glasgow Corporation standard top roof cars.

On examining Fig. 3, it will be noticed that as the load on the motor increases, the speed rapidly falls, and, at the same time, the torque rapidly rises. Speaking approximately, the speed is inversely proportional to the current, and the torque proportional to the square of the current taken to drive the motor. With a shunt motor, and also with a compound motor, the speed is nearly constant for all loads, and the torque directly proportional to the current taken by the motor. This would be most unsatisfactory for traction work, for on gradients the shunt and compound motors would take considerably greater currents to drive them than the series motor; because they would, on a hill, keep running at the same speed as on the level, while the series motor would lower its speed when going up hill.

Owing to its torque varying as the square of the current, at

starting and on steep hills, when the currents are large, the series motor exerts a greater torque on these occasions than the shunt motor. The use of shunt motors would cause much greater fluctuations in the current supply from the power station and also necessitate heavier and more expensive motors; and the feeder cables and trolley wires would also require to be heavier, for the same margin of safety, and the power plant of greater capacity due to the load factor of the station falling.

Regenerative Control.

One thing in favour of the shunt motor, as mentioned above, is, that it can be used to return current to the line when the car is running by its own weight down a hill. This regeneration of electric current by the motors has a braking effect on the car, which thus controls its speed within certain limits. This system of control has been lately introduced by The Raworth Traction Co. and The Johnson Lundell Co., and is known as regenerative control.

In the case of a crowded network of tramway lines with many steep gradients, such as are to be found in the Birmingham district, a considerable saving in power may in this way be effected. Under ordinary circumstances, however, this single benefit of the shunt motor has not as yet proved itself sufficient to counterbalance the greater advantages of the series motor. Also, as the shunt winding is liable to get out of order and is more expensive than a series motor winding, especially when working under such conditions as obtain with ordinary traction motors, the series motor will, in most cases, hold its own for this class of work.

Current and Speed on Gradients.

Referring again to the torque curve of the series motor shown in Fig. 3, from this the current required to take the car or train up any gradient, and the maximum attainable speed on that gradient are easily found.

The torque in lbs. required to take a car or train of W tons in weight up a gradient of x per cent is

$$W\ (R + 22{\cdot}4\ x)$$

For tramway cars this becomes,

$$W\ (30 + 22{\cdot}4x)$$

and for railway trains the torque is

$$W\ (20 + 22{\cdot}4\ x)$$

Of course, at starting, the torque required is considerably greater than the above; the friction is then static, and equals something like three times the rolling value. When once started, the friction falls to its rolling value; but the car requires to be accelerated till the maximum speed is reached.

If a be the acceleration in miles per hour per second, the torque required becomes W $(102{\cdot}67\ a + R + 22{\cdot}4\ x)$ lbs.

The current is found on the curve, Fig. 4, opposite the torque so calculated. As there are usually two motors on each car, each motor exerts only one-half the required torqe.

Evidently the current falls off as the car acquires speed, since a gradually falls to zero. The maximum attainable speed on the gradient in question is easily found from the current [which gives torque $= W(R + 22{\cdot}4x)$] by referring to the speed curve. It is obviously impossible in a paper of limited length to go more fully into these calculations, although it will be evident that the power required not only to accelerate the car, but all its moving parts, etc., must be considered in a full investigation. Enough, however, has been given to show generally how the problems are attacked and solved.

Electric Tramways. Overhead System.

The most important and by far the most widely adopted system of electric tramways is that with an overhead trolley wire, such as is used in Glasgow, Manchester, Liverpool and other cities.

Cables.

The electric current is led through underground cables from

the power station or stations to various points on the tramway routes. These cables are sometimes laid in wooden or composite troughs, which are filled in with bitumen or pitch; at other times, and preferably, they are pulled into and lie in ducts or pipes made of fibre, fireclay, cast iron, or thin sheet iron, lined inside with cement. The ducts are imbedded in concrete, and are situated below the surface of the street, usually just under the track, as shown in Fig. 4. They lead into brick-built manholes, placed not more than 400 feet apart. These manholes are used to enable the cables to be drawn into the ducts in stretches between each manhole. The joints are made in the manholes.

The feeding points to the overhead line, are placed not more than half-a-mile apart. The overhead line is divided into half-mile, or less, sections, each of which is fed from a separate point. Each overhead section is insulated from adjacent sections by a "section-insulator" and the feeding points are connected up in sets of one, two or more, by means of underground cables, and from each set a cable passes direct to the power station which supplies the current for the cars.

The main cables from the station are termed "feeder cables," those joining up the different feeding points of one set are termed "distributer cables," and cables used to interconnect different sets of feeding points, and which are only used as "stand-byes," are termed "inter-connector cables."

Fig. 5 shows a feeding point on a standard tramway system with an overhead trolley wire. The position and shape of manhole, feeding switch pillar, and the construction of the overhead trolley and guard wire suspension is clearly shown. The current is led from the switch pillar, by means of cables running up inside the poles and across to the trolley wires.

Collectors.

The current for running cars is collected from the overhead trolley wire by means of a trolley boom or pole with a small

running grooved wheel fixed at the top, or else by means of a bow. The latter form of collector is very seldom to be met with in this country, but is often used in continental towns. It has the advantage of never leaving the wire, but wears the wire slightly more than the trolley wheel. The top of the bow is now sometimes made of aluminium and often consists of a roller, and the wear on the trolley wire is scarcely perceptible. Both forms of current collectors are shown in Fig. 6.

Electric Tramways, Conduit System.

The next most important system of electric tramway traction is the conduit. This system is to be met with in the centre of such large cities as London, Paris, and Berlin. A combination of the two systems is sometimes adopted as at Berlin, where the cars are run by a trolley wire system in the suburbs and by a conduit system in the centre of the city. The same cars run over both systems, but when leaving the trolley wire system, the trolley poles are pulled down and held fast by means of a hook, and the plough collectors are let down into the conduit slots. The conduit system differs from the overhead trolley system in having the conductor or contact line situated in a conduit under the surface of the road instead of being suspended overhead. In the overhead trolley wire system the current almost always passes from the motors to the ordinary track rails and thence by cables, bonded to the rails at various points, back to the station. In the conduit system, however, two insulated conductor rails are usually used, one for conducting the current to the cars and one for conducting it back to the station. Cables are bonded to both these conductor rails at various points, and, as a rule, either rail can be used as a positive or negative rail, and are often so used time about. The half-mile sections of the conductor rails are separated by air spaces, and at junctions and crossings similar air spaces are left.

The use of both a positive and negative conductor is of some advantage, as it prevents earth currents or stray currents, which will occur to a greater or less extent near the track rails, when these are used as return conductors. Earth currents, if excessive, will, by an electrolytic action, gradually corrode gas and water pipes in the vicinity of the track. The pipes of small diameter will, however, be the only ones much affected. In the case of an insulated return conductor system, this leakage current cannot exist, since all the return current passes by an insulated path back to the station.

As a standard conduit system, Fig. 7 shows the track, and conduit with conductor rails, of the South London tramways. The section taken is that at one of the feeding points, the manhole and cable ducts are to be seen in the lower part of the figure.

Tramway Permanent Way.

The permanent way of the electric tramways is a very expensive and important piece of work. The rails are somewhat heavier than those used in ordinary railway work, being about 100 lbs. per yard. They are girder shaped, about 7 inches deep; that shape being best adapted for street work, as it is specially suited for having granite sets embedded on either side. In the earlier days of tramway work, the rails were laid on longitudinal wooden sleepers, then later, on cross sleepers, and, later still, on solid cement, being packed underneath with a small amount of sand and granite chips. Though all the above methods are still adopted, the latest method is to lay the rails on heavy wooden cross sleepers, similar to that adopted in the early days of tramway work. The sleepers are embedded to within half-an-inch of their depth in concrete, and the rails laid and held to the sleepers by spikes. The gauge of the rails is maintained by tie bars placed every five feet apart. The gauge, which is usually 4 feet 7½ inches, is measured from the outside of the groove in one rail to the outside of the groove

in the other. The sleepers, which are about 10 or 11 inches broad, are placed from 2 feet 9 inches to 3 feet apart. The wood is usually Norwegian pine, and is preserved by impregnation with creosote, sulphate of copper, or corrosive sublimate. Haskinized wood has also been tried, *i.e.*, wood which has been subjected to great heat under great pressure. This is said to dry the wood and yet preserve its natural resins and less volatile oils. Figures 4 and 5 show the general construction of standard tramway tracks.

Rail Bonding.

When the rails are used as a return conductor for the electric currents from the cars, they are bonded together at the joints by means of flexible copper bonds, but in the case of tramway work the rails are sometimes welded together at the joints. There are various means of accomplishing this, one way is to heat the rails and fish plates to a welding heat by an electric current, the fish plates being at the same time pressed firmly against the rails. This method is carried out by the Lorain Steel Co. The oxo-hydrogen flame process is somewhat similar, only no fish plates are used, but a higher temperature is attained and the ends of the rails are melted and run together. The Falk cast weld consists in running cast iron round the joint which partially welds the rails together.

A still later method is that introduced by Dr. Goldschmidt, a German. It is known as thermit welding, and has been used to a considerable extent in this country. It is somewhat similar to the Falk cast weld, only, instead of cast iron, a specially prepared substance called thermit is used. This material consists of iron oxide and aluminium in a fine granular state. On ignition it melts and is run round the joint apparently uniting the rails more homogeneously than cast iron. In railway work welded joints cannot be used, as the rails would twist and bend, due to expansion and contraction. In tramway work, however, the rails are fixed firmly in their

place by the granite sets and tie-bars, the effect of changes of temperature being merely to set up tensile or compressive stresses in the rails. Rails so welded are difficult to remove for renewal; it is therefore very questionable whether welded joints are advisable; in any case, every fourth or fifth joint at least should be copper bonded. Cast iron sets are often placed alongside the rails to prevent undue wear to the road at that point, as other heavy traffic, such as lorries, use the car lines.

Surface Contact and other such Systems.

There are numerous other systems of electric tramways, such as surface contact systems, the mechanism of which may be either mechanically or electro-magnetically controlled. In these a continuous exposed conductor is not being constantly fed from the cables, as in the overhead trolley and the conduit systems. The conductors consist either of a series of studs or of short conductor sections placed less than a car-length apart. Only those particular studs or conductor sections over which the car is actually passing at the time are connected with the cables. This connection is made mechanically by the car in passing or by an electro-magnet on the car. The current collectors on the cars make connection with a new stud before leaving the one already in contact.

The advantage of these systems is that there is less leakage than in the conduit system, and at the same time there is no overhead construction which is sometimes considered unsightly or at any rate undesirable in the centre of large cities. The mechanism connecting the studs to the cables is, however, liable to get out of order. A combination of the stud or short conductor section system with the conduit is preferable. None of these systems are, however, of such importance as the overhead trolley wire and conduit systems, and so need not be further referred to.

Rolling Stock.

Tramway cars are usually fitted with two motors; if the car,

however, be a large one, four motors are sometimes used; while in some small cars only one motor is employed.

The position of the two motors with reference to the car truck is shown in Fig. 8. Each motor drives a wheel axle through spur gearing. The electric current passes from the trolley wire, or conductor rail in the case of the conduit system, by means of the collector, to the car motors, and thence to the rails or negative conductor.

The electric circuits of a standard tramway car are shown in Fig. 9. The current on entering these circuits passes first of all through two switches, one of which is usually placed at each end of the car; it then passes on through a safety fuse to the controllers, and from them *via* the resistances and motors to the frame of the car and track, or to the negative collector and rail where these are used. Each car is fitted with a lightning arrestor, and has one or more lamp circuits which are connected to the side of the fuse nearest the controllers and motors.

Series Parallel Control.

The connections of the controllers, resistances, and motors are, as already stated, shown in Fig. 9. The controller is a standard Westinghouse car controller, with seven power notches or positions, and five brake notches. When the controller handle is moved to No. 1 power notch, the power is thrown on to the motors, which are connected in series with one another and have a fairly large resistance in circuit. As the handle is moved to Nos. 2 and 3 notches, this resistance is gradually cut out till, on No. 4. notch, the motors are connected in series without any external resistance in circuit with them. On No. 5 power notch the motors are connected in parallel with a resistance in circuit, which is partly cut out on No 6. notch. When No. 7 notch is reached both motors are connected in parallel, no external resistance being then in circuit.

As the resistances are not made for carrying large currents continuously, and as they simply waste power when current is passing through them, there are only two efficient or running notches, at which the controller handle may be set for any continued period of time. These are Nos. 4 and 7, when the motors are connected in series or in parallel without any resistance in circuit in either case. Notch No. 4 is sometimes known as the half-power position, and No. 7 as the full-power position. On the brake notches, the motors are not connected with the power circuit at all. They are connected in parallel and simply short-circuited through a resistance.

As the controller handle is moved from No. 1 brake notch to No. 5, the resistance is gradually cut out till the motors are completely short-circuited. The motors, when short-circuited through a resistance, will, when running, generate electric currents, similar to a series dynamo. The strength of the currents generated is proportional to the speed of the motors, that is, of the car; and the generation of these currents acts as a brake on the car, rapidly retarding its motion.

Fig. 10 represents the speed-time curve of an electric tramcar. It shows clearly the accelerating effect on the car during the time the controller handle is on the various power notches; it also shows the retarding effect when the controller handle is operating on the brake notches. The current in the motor circuits at every instant is also shown in the figure.

These curves were calculated from the characteristic curves of the motors used in the Glasgow Corporation standard double deck cars, and, actual tests taken under running conditions by means of a recording ammeter, confirmed almost exactly the results of the calculated curves.

Telephones.

Before passing on to electric railways, it is to be noted that in all standard tramway systems, a complete telephonic system is put down. Telephone pillars are situated at different points

on the routes, and are used to report breakdowns in the system, accidents, or ordinary traffic information.

Electric Railways. Third Rail.

Up to the present time, nearly all the railways in this country have used continuous current when adopting electric traction. This system will therefore be considered first.

Railway electric traction is the same in principle as that of tramways, but the motors are naturally heavier and more powerful. The current is nearly always collected, in the case of continuous current systems, from conductor rails placed on the same level as the track; for it is not advisable to collect currents of a greater value than 200 or 250 amperes from an overhead trolley wire. The positive conductor rail is usually placed along one side of the track, and the negative conductor rail, when used, in the centre of the track.

A specially insulated return is usually used with continuous current low voltage systems, in consequence of the heavy currents dealt with, which would cause large earth currents, if the ordinary traffic rails were used as a return. Such currents tend to interfere with the good working of telegraph and other signals alongside the railway.

Fig. 11 shows in section a standard electrified railway track—that of the London Metropolitan Railway. The conductor rails are supported on porcelain insulators, as shown. The positive conductor usually has a more or less efficient wooden guard fixed to it, to prevent employees from coming into contact with the rail and receiving an electric shock. The method of bonding the conductor rails is shown in the lower part of Fig. 11.

Multiple Unit Control.

Sometimes a single electric locomotive is used to draw a train of carriages in like manner to ordinary steam traction. This still continues to be done with goods trains, but with passenger trains it is becoming a common practice, for the sake

of quick acceleration, to have motors on every car. All the cars are controlled from any one controller situated in any of the cars. This controller is then known as the "master controller." As the currents driving the motors are usually too large to be dealt with directly in the controller itself, a separate control circuit is installed, and joined up by means of couplers between the carriages so as to form one complete control circuit from one end of the train to the other. By means of this control circuit the main motor circuit connections are closed or opened by means of solenoids acting on circuit breakers or switches. The power for the control circuit is either obtained from the main power circuit or from a battery situated on the cars. The current in the control circuit is comparatively small and easily dealt with in the hand controllers. This system of controlling a number of cars from one "master controller," each car being fitted with motors, is known as the "Multiple Unit Control." The general connections are shown in Fig. 12. The special couplers for joining up the control circuits between two adjacent cars are shown to the left and right of the figure.

In many cases the control-magnet solenoids do not act direct on the main circuit breakers, but on a series of pneumatic valves which are connected together so as to operate only in a certain order and at a definite rate. These valves admit air to pneumatic cylinders, the piston rods of which are connected to the main circuit breakers. The rate of acceleration of the cars in these cases is out of control of the driver of the train, at least beyond a certain fixed maximum. No matter how fast he manipulates the controller, the main circuit connections are only completed at the fixed maximum rate, and up to the point at which he leaves the handle.

In large cars the four motors are usually operated in series-parallel control, being often connected permanently in sets of two which may be run either in series or in parallel with one another. A more economical method is to couple the four

motors in series to begin with, then to throw them two in series and two in parallel, and finally all four in parallel.

Systems of Distribution.

The voltage of the contact line, that is, the trolley wire or conductor rails, in all the cases yet dealt with varies from 500 to 600 volts. With such a comparatively low voltage the current required to drive heavy cars and trains is very large, about 150 amperes for every 100 horse power used. Now, large currents cannot be transmitted long distances from a power station without heavy losses, though these may be reduced by putting down an exorbitantly expensive cable system. The losses in transmission are proportional to the square of the current transmitted and directly as the resistance of the transmission line. It will thus be seen that a reduction in the strength of the current will considerably reduce the transmission losses.

The amount of power transmitted is proportional to the product of the current transmitted and the voltage at which it is transmitted; hence, to reduce the current, higher voltages have to be used for transmission.

In spite of recent advances in high pressure continuous current transmission, no simple and compact apparatus for raising and lowering the voltage similar to the alternate current transformer has yet been devised. High tension continuous current is admirably adapted for transmission purposes, both from the point of view of economy and switching apparatus, but up to the present alternating current has been almost invariably used for transmission purposes.

In most large tramway systems and suburban railway systems, the current is generated at the power station by three-phase generators, at a comparatively high pressure, usually 6,600 volts. At this pressure the current is transmitted to a number of substations situated at various points in the system, where the current is converted from three-phase high tension to continuous current of from 500 to 600 volts, at which

pressure it is supplied to the various feeding points on the contact line as described above. The method of converting the three-phase high tension current to low tension continuous current is by means of motor-generators (the motors of which may be either synchronous or asynchronous) or by means of static transformers and rotary converters.

Three-Phase Electric Traction.

In the case of railway lines which extend for a considerable distance into the country, that is to say, which do not simply consist of a close net-work as in the London Metropolitan Railways, it has been found cheaper simply to transform the three-phase high tension alternating current to three-phase alternating current at a lower tension, and use this direct on the contact line without further change. In this system there are two overhead trolley wires, the track rails being utilised as the third conductor; and, as considerable pressures can be used on the contact line, it is suitable for heavy traction work.

In the three-phase system of traction, the cars are equipped with two overhead collectors and with three-phase motors, the general construction and connections of which are shown in Fig. 13. Instead of containing complete windings, in many cases the rotor simply consists of an iron core with copper bars fixed in slots round its periphery, and short circuited at either end by a copper ring. Such a rotor, known as a "Squirrel Cage Rotor," is only suitable for small motors.

Induction motors cannot have their speed conveniently varied, and thus in this way they somewhat resemble shunt motors; and, like shunt motors also, they can be utilised to return current to the line when the cars are going down hill. The torque at starting is increased, in the case of motors with wound rotors, by throwing a resistance into the rotor circuit, which is gradually cut out as the motor reaches its full speed. The effect of the resistance is shown in Fig. 15, where the torque-speed curves of a three-phase induction motor are shown

by dotted lines. The heavy line curve is that for the motor when its rotor is short circuited, and the thin line curves when the resistance in the rotor circuit is increased to three times and five times respectively its short-circuited value.

It will be noticed that the effect of inserting the resistance is to alter the position of maximum torque. The resistance is so adjusted as to give maximum torque at starting. After the motor is started the resistance is gradually cut out and the rotor finally short circuited when full speed is nearly attained. Two or more such three-phase induction motors are usually fitted on each car.

For railway work, where the length of the line warrants it, it is cheaper to increase the line pressure and thus reduce the current in the overhead line and in the rails; this also enables fewer transformer substations to feed the line.

The voltage of the contact line, that is, between the two trolley wires and the track rails, is sometimes as high as 3,300 volts, and pressures as high as 6,600 volts have been used. The comparatively recent electrification of the Simplon Tunnel line has been carried out on this system.

In connection with the high speed tests made on the Berlin to Zossen line, a three-phase current was used at a pressure of 10,000 to 12,000 volts between three overhead trolley wires. A speed of 136 miles per hour was attained on this line, a truly wonderful record speed. A transformer was used on the cars to reduce the pressure of the current before delivery to the motors; but it is quite possible to build induction motors to stand pressures up to 6,600 volts, applied direct to the stators. The voltage at which the current is transmitted from the power station to the transformer substations, in the case of lines of great length, may rise as high as 50,000 volts. It is transformed up to this pressure at the power station, as alternators are not built to generate currents at such high pressures. The transformer substations in cases where pressures as high as 6,600 volts are used on the overhead line may be placed as far as 20 miles apart.

Single-Phase Electric Traction.

The great disadvantage of using three-phase currents on the contact line is that at least two overhead conductors are required, which involves considerable difficulty at cross-overs and junctions. Of course it is easy enough to say, "Get over the difficulty by using single-phase currents;" but until a few years ago no satisfactory single-phase motor had been built.

That difficulty, however, has now been overcome, and single-phase traction for long distance railway working, and even for suburban lines, has come to stay.

Single-Phase Motors.

The single-phase induction motor, which is similar in principle to that of the three-phase induction motor, did not solve the difficulty, because it had too small a starting torque. The practical solution has narrowed itself down to two types of single-phase motors, both of which possess commutators.

First—The compensated series motor.

Second—The compensated repulsion motor.

These two motors are shown in Fig. 14.

The compensated series motor is similar to the continuous current motor in its action, the compensated winding being introduced to counteract the reactive effect of the armature current on the exciting field.

The repulsion motor is similar to a transformer with a short circuited secondary. The field windings take the place of the primary of the transformer, and the armature windings with the short circuited brushes, the secondary. The small transformer used in conjunction with the motor produces a field at right angles to the induced field caused by the current through the short circuited brushes. These two fields produce a torque which starts the motor.

So far as actual running goes, there is not much to choose between them. The repulsion motor has a higher power-factor for certain loads than the series motor, but the latter maintains

its high power-factor over a greater range. The repulsion motor can also be used for regenerative purposes. The series motor, however, possesses one considerable advantage over the repulsion motor, and that is, it can be run equally well from a continuous current line or an alternating current line. This is of great advantage when a car so fitted is required to run over a portion of a continuous current railway system, or even over an ordinary tramway route.

Single-phase motors are heavier than continuous current motors of the same capacity, their efficiencies, however, especially in the more recently built examples, are nearly as high.

Fig. 15 shows the comparative speed-torque curves of continuous current, three-phase, and single-phase motors. It will be noticed that for low speeds the single-phase motor has the greatest torque and for high speeds the least torque.

Single-Phase Overhead Construction.

In single-phase systems there is only one overhead conductor, and this is supported from one or two steel suspension or messenger wires which run along above it. The suspension wires are hung in the form of a catenary, with a considerable dip, so as to minimise the stress set up in the wires, and the trolley wire is supported from the catenary suspension wires by means of hangers made of different lengths, and so arranged that the trolley wire is perfectly horizontal. The hangers are fixed 10 feet apart, and the line when erected appears as shown in Fig. 16.

The necessity for having the trolley wire perfectly horizontal is to prevent the current collector on the car giving a violent knock at every span wire support. This happens when the trolley wire itself hangs in a catenary form, no matter how flat; as there is a change in the direction of the wire at each support. This knocking is noticed even on tramway car lines at comparatively low speeds, and it is easy to see how it would be aggravated at high railway speeds. Indeed, if trolley-wheel

collectors were used under these conditions, they would be liable to leave the trolley wire at every support. In railway work, however, a bow collector is usually used.

The extra-high tension transmission line for feeding the transformer substations is carried on the poles which also support the overhead line, Fig. 16. An improved form of bow collector of a pantograph form is also shown in Fig. 16. The part of the collector which makes contact with the trolley wire is made comparatively light, and is pivoted and adjusted with springs so that it readily responds to any slight changes in height, etc., which may occur in the trolley wire. The collector is usually raised into contact with the trolley wire by means of an electro-magnetic solenoid, or it may be operated pneumatically.

Single-Phase Control.

A transformer for transforming the high pressure supplied from the overhead wire to a pressure suitable for the motors is stationed on the car. The series motor is not designed to run at pressures over 550 volts, and runs best at frequencies of 25 cycles per second or lower. The repulsion motor can be designed to run direct off a comparatively high pressure, but it is not desirable to do so as it is somewhat dangerous to have high tension currents too near the running parts. Higher frequencies than 25 can easily be used with repulsion motors.

The system of control for single-phase motors is comparatively simple. A number of tappings is taken off the secondary windings of the static transformer on the car, and these tappings enable voltages varying from 220 to 550 volts to be thrown on the motors. With a simple voltage control all the controller points or positions are efficient, being equally good for running on; this is very different from the continuous current series-parallel control, where only two controller points, namely, full series and full parallel are efficient running positions. Fig. 17 shows the connection for a car fitted with single-phase series motors, worked by multiple unit control.

Single-Phase Distribution.

Owing to the high voltages which may be used on the overhead line, the current collected by the cars may be made comparatively small, and under these circumstances the track rails act quite efficiently as the return conductor. The joints of the rails must, of course, be efficiently bonded, and rail return negative cables connected to the rails at various points, so as to conduct the currents back to the transformer substations. Where the distance between the transformer substations is considerable special booster transformers fed from the overhead line are connected to the rails, and these keep the voltage of the rails within suitable limits. Regarding the voltages which may be used on the overhead trolley line, 6,600 volts is likely to become the standard on main lines in the open; a considerably lower voltage, say 550, is quite sufficient at stations, in sheds, and for short distances on public roads where the conditions are similar to a tramway. On a single-phase line in Sweden it is proposed to use 20,000 volts. The voltage of the transmission line from the generating station, in three-phase working, may rise as high as 50,000 volts, and voltages as high as 100,000 volts have been considered.

The losses in single-phase transmission are greater than in three phase; but the single overhead trolley wire, however, gives it an advantage. Single-phase motors are also less efficient than either three-phase motors or continuous current motors. The over-all running efficiency of a single-phase system, however, is better than a continuous-current one fed by rotary converter substations; because, first, transformer substations cost less and are more efficient than rotary converter substations; and second, there are no wasteful starting resistances used on the cars in single-phase working.

Running Cost under Electric Traction.

As regards power and other traction costs, these compare very favourably with steam traction. In the case of the

Valtellina line in Italy, the total traction expenses came out at 2s. 2d. per 1000 ton miles, as against 5s. 4d. for a similar line worked under much the same conditions, but by steam traction. The Valtellina line is equipped for three-phase working with 3000 volts on the trolley wires. Of course the total cost of laying down a system has to be considered in addition to the running expenses and repairs, when arriving at a comparative figure.

General Conclusions.

The same system will not do everywhere, each case must be taken on its merits.

On a small car system low voltage continuous current, generated, and used on the line is likely to be the best.

On larger systems with a fairly dense network and close service whether of cars or trains, it is perhaps best to adopt three-phase high tension currents, transmitted to rotary converter substations, and from these issue low voltage continuous current to the conductor line. Overhead trolley lines would then be used only for tramway cars and light trains, and conductor rails for heavier trains.

For heavy electric traction on long distance lines it is most economical to adopt three-phase working throughout, the line voltage being about 6,600 in the open country, and 550 volts at the stations.

For general work, however, of all kinds, in large tramway systems where the network is very open and the service not very frequent, and for light goods and through passenger trains, single-phase working seems to be the most desirable. As in three-phase traction the voltage would be from 3000 to 6000 volts in the open country, and 550 volts at stations, in sheds, and on public roads.

The electrification of railways brings along with it certain auxiliary advantages. For instance, it places a convenient source of electric energy all along the course of the line, which

can be used for various purposes, namely, lighting and heating the stations and signal boxes, working lifts, turntables, etc., or it may even be used for a temporary purpose anywhere along the line by means of portable transformers and motors. Other advantages include better lit carriages, a better service, absence of smoke and dirt, all of which are very desirable features, and there appears no doubt that, sooner or later, electrification schemes will be entered on in this country.

APPENDIX.

Cost of Different Systems of Electric Traction.

The following costs are given not so much for their actual value as for comparison of the costs of the various systems of electric traction. The figures are compiled, in the case of tramway traction, from the actual amounts which the two different systems cost in Glasgow and South London respectively. The railway costs, which are given with more diffidence, are taken from estimates actually given for various systems laid down in the United States.

Electric Tramways.

Cost of Overhead System.

The cost of a standard overhead system of tramways works out as follows when reduced to one mile of double track:—

Permanent way, - - - - - -	£11,000
Ducts and Manholes, - - - -	2,500
Cables, - - - - - - -	2,500
Overhead construction, - - -	1,500
Bonding and Miscellaneous, - -	600
Total,	£18,100

Cost of Conduit System.

The cost of a conduit tramway system considerably exceeds

that of one with overhead trolley wires. Breakdowns in the conductor line, if not so frequent, are more difficult to deal with, and more likely to disturb traffic when being repaired. The leakage on the positive conductor is also inclined to be greater, especially in places where there is much rain.

The cost per mile of double track is as follows:—

Permanent way and conduits, - - -	£26,000
Cables and feeder pillars, - - -	4,600
Miscellaneous, - - - - - -	400
Total,	£31,000

Cost of Electric Tramcars.

The cost of standard tramway cars completely equipped ready for service varies as a rule from £500 to £600 each.

ELECTRIC RAILWAYS.

Cost of Continuous Current System.

The cost of an electrified railway track with 3rd and 4th conductor rails when reduced to that of one mile of double track, works out at—

Ordinary track (complete), - - -	£6,000
Conductor rails, insulators and bonds, erected complete, - - - -	2,800
Total,	£8,800

Cost of Electric Railway Cars.

The cost of a four-motor car for passenger trains, equipped complete for service, is upwards of £2,000.

Comparative Cost of Three-Phase and Continuous-Current Traction Systems.

As a comparison between a three-phase traction system and

one using continuous current from rotary converter substations, the cost of a line 233 miles long for heavy traction equipped under both conditions is given below—

First.—Three-phase transmission from the power station at high pressure to rotary converter substations, where the current is transformed and converted to continuous current at 1,000 volts and delivered as such to the third rail or conductor, the track rails being used as the return.

Cost per mile of double track—

Permanent way (say) - - - -	£6,000
Contact line, - - - - - -	1,480
Substations, - - - - - -	980
Transmission line, - - - - -	1,200
Power station, - - - - -	1,280
Total,	£10,940

Second.—Three-phase high tension transmission to transformer substations where the pressure is reduced to 5,000 volts and delivered three-phase to the line at that pressure.

Cost per mile of double track—

Permanent way (say) - - - -	£6,000
Contact line, - - - - - -	980
Substations, - - - - - -	90
Transmission line, - - - - -	1,200
Power station, - - - - -	1,020
Total,	£9,290

The main features of note concerning these points are:—

First.—The contact line in the three-phase system is cheaper, principally due to the lower currents dealt with, for whereas continuous current traction motors have not been built for higher pressures than 1,000 volts, three-phase induction motors can be worked at pressures as high as 5000 volts.

Second.—Transformer substations are cheaper than rotary convertor substations, and can be overloaded to a greater extent for short periods.

Third.—The power station plant supplying the transformer substations does not require to be of such great capacity as that for rotary converter substations, as the efficiency of transformer substations is greater than those with rotary converters.

Relative Cost of Single-Phase and Continuous-Current Traction.

As a comparison between the cost of a line equipped for single-phase working and the same line equipped for continuous-current working from rotary converter substations, the following figures are given. They refer to a line 146 miles in length, and the costs are reduced to those for a mile of double track:—

First.—Single-Phase Working—	
Permanent way (say) - - - - -	£6,000
Trolley line (catenary construction) - -	860
Transmission line, - - - - -	390
Bonding, - - - - - - - -	110
Transformer substations, - - - -	440
Total,	£7,800
Second.—Continuous-Current Working—	
Permanent way (say) - - - - -	£6,000
Trolley line (Two No. 0000 conductors),	970
Transmission line, - - - - -	350
Bonding, - - - - - - - -	110
Rotary substations, - - - -	950
Total,	£8,380

This line, of course, is not intended for such heavy trains as the 233 miles three-phase line previously referred to.

SOME DETAILS OF ALBION MOTOR CARS.

By Mr. T. Blackwood Murray, B.Sc.

SEE PLATES XIX. AND XX.

Read 7th May, 1907.

In this paper I have taken it for granted that those present are acquainted with the general mechanism and *modus operandi* of a modern petrol motor car, and therefore intend only giving, with the aid of a few illustrations, a brief description of the general arrangement of the 16 H.P. and 24 H.P. Albion chassis, sufficient to allow the consideration in detail of some of the more interesting and distinctive features which are common to both. Fig. 1 shows a view of the 16 H.P. engine from the left hand side. The fly-wheel and gears for driving the half-time shafts and governor are seen on the right, on the rear end of the crank shaft. On the front end of the crank shaft there are the magneto electric generator providing the necessary current for ignition, and the conical end and claw cam for receiving the starting handle. The fan for ensuring a sufficient draught of air through the cooler is driven by a cord belt, and below may be seen the centrifugal pump which draws the supply of water from the cooler, and forces it through the cylinder water jacket and out at the discharge pipe from the top of which it is led back to the cooler. The pump is driven off the front end of the governor shaft, which runs at a slightly higher speed than the engine itself. The centrifugal part of the governor runs in oil in the gear box shown in the front of the view. The travel of the governor balls is communicated to the horizontal shaft, the end of which is seen in the figure, and to which is fixed a wyper controlling the throttle valve through the variable link gear, the extra air valve through another connecting rod, and the ignition advance gear through a third

connecting rod. The carburettor is also clearly seen in this view. Immediately behind the variable link gear are seen the suction valves, which are operated by cams on the left hand half-time shaft, which also carries the trip cams for operating the ignition trip gear. Above on either side are seen the ignition plugs.

The exhaust valves are operated by cams on the right hand half-time shaft, which also carries release cams for reducing the compression when starting up the engine, and a single thread worm to drive the lubricator gear. This worm gears with a worm wheel having 18 teeth fixed on a small horizontal crank shaft, which in its turn operates the ratchet pawl rod of the mechanical lubricator. The friction clutch is mounted so as to rotate and slide freely upon the extension of the crank shaft. It is of the leather-faced conical type, and is withdrawn from contact with the fly-wheel by means of the conical slip ring, from which the power is transmitted to the spring drive through two crank pins or driving arms. These two crank pins transmit the drive to the two spring piston rods, which are provided with ball and socket ends, and from these the torque is transmitted by tangential spiral compression springs to the crossheads, which swing freely in the cross pins in the double driving arm keyed to the end of the first motion shaft on the gear case.

Spring Drive.

The introduction of a spring or elastic drive in the transmission gear was most adversely criticised by many to begin with, but it is gratifying to notice that a number of leading firms have now introduced a similar device. Its advantages in minimising, and to a great extent eliminating, shocks which would otherwise be transmitted from the road wheels to the engine and *vice versa* is very great.

Fig. 2 shows the 24 H.P. motor from the right hand side. In the foreground may be seen the governor box with the centri-

fugal pump on the front end driving off the front end of the governor spindle. From the centrifugal pump the water circulating pipe leads to the four cylinders. Immediately above this is the suction pipe, in the centre of which is the carburettor. The suction valves are arranged along this side of the motor, and the low tension ignition plugs form the covers for the suction valves. The plugs are served by a bus bar running along the top of the cylinders with clip switches to each plug. The magneto is mounted on the front end of the crank shaft, and the fly-wheel is so constructed as to form a fan on the rear end. On the front end of the engine is seen the mechanical lubricator, which is direct driven from the engine. On the other side of the engine are arranged the exhaust valves.

An interesting feature is a tiny air pump, driven from an eccentric on the exhaust cam shaft to supply the necessary pressure to force the petrol from the tank at the rear of the chassis to the carburettor.

In the type of spring drive employed in the 24 H.P. Albion motors, the torque is transmitted through a helical spring of flat steel, the axis of the spring being coincident with the centre line of the transmission shaft. The one end of the spring is anchored to the shaft and the other end to the half of the Hooke's coupling, which is mounted free to rotate on the transmission shaft. To provide against the contingency of the spring fracturing, it embraces a simple jaw clutch which goes into action in that event and takes up the drive. Under normal conditions there is sufficient slack in the jaws to allow the spring to perform its functions.

LUBRICATOR.

Considerable attention has been drawn of late to the objectionable and far too common practice at present prevailing of over-lubricating cars, causing thereby a smoky, evil smelling exhaust. In the majority of cases it is the fear of under lubrication (due to the haphazard methods employed) that

Fig. 1.

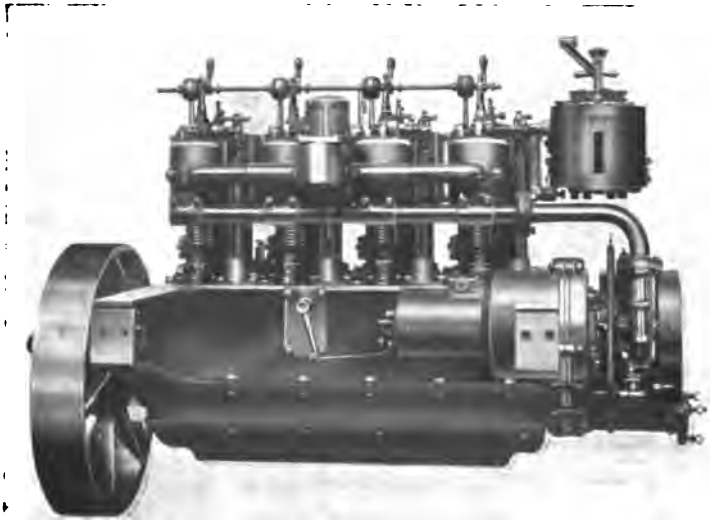

Fig. 2.

induces drivers to over-lubricate their engines. Over lubrication also leads to intermittent ignition due to sooting up of the plugs, choking up of the silencer with resultant loss of power due to back pressure, and to gumming up of the valves. The Albion patent mechanical lubricator has been designed to overcome these objectionable features, and to ensure efficient, certain, and uniform lubrication at all times. One important advantage is that it requires no attention on the part of the driver. All that is necessary is for him to see that there is oil in the lubricator, and to set its rate of feed in accordance with instructions issued with the car. After this has been done the lubricator will deliver under pressure by means of a valveless pump, a definite quantity of oil to each part requiring lubrication. The rate of feed is proportional to the speed of the motor, so that the faster the engine is running the more oil is delivered to it and *vice versa*.

Referring to Figs 3 to 7, A is a box containing lubricating oil, the depth of which may be ascertained by a contents glass. In the bottom of the box is fixed a horizontal steel disc B, carefully machined to a true flat surface on its upper side. In the centre of this disc is a bush for the vertical spindle B of the lubricator, and at a given radius from the centre are twelve equally spaced ports B_2, B_3, bored vertically in the disc, six of these being suction ports B_2, and the six alternate holes delivery ports B_3. The suction ports communicate freely with the oil in the box by radial holes bored outwards through the disc. The delivery ports are tapped to receive couplings which pass through the bottom of the oil box, and serve the double purpose of fixing the disc in the box and leading the oil from their respective ports to the various parts of the engine. The lubricator spindle passes right up through the cover, and terminates in a handle H, which indicates the position and motion of the pump and can be used to give an extra supply of oil at any time. Immediately above the fixed steel disc is a gunmetal pump disc E, which is keyed

to the spindle, but free to slide on the same. The under side of this disc is also carefully machined to a dead flat surface so as to form an oil-tight working joint with the fixed steel disc. At the same radius as the ports in the fixed steel disc this gunmetal disc carries a pump cylinder, the axis of which is normal to the surface of the disc. In this cylinder is fitted a plain steel plunger E_1, carrying at its upper end a roller E_3 and to keep this roller in a plane tangential to the path of the pump, the plunger has a guide arm E_4, the extremity of which is bored a loose fit for the spindle B. The plunger E_1 is always forced upwards by a spiral spring E_2. The pump disc C is kept in intimate contact with the steel disc by means of the spiral spring C_1. On the lid of the box are a series of alternate cone-shaped cams and flat stop pins F, F_1, F_2. These are arranged in a circle concentric with the spindle, and at the same radius as the ports and the pump, and the function of these cone-shaped cams is to give a to-and-fro motion to the pump plunger. The action of the pump will be readily understood by considering for a moment Figs. 5, 6, and 7, which represent diagramatically the cycle of the pump through one suction and discharge stroke. If the pump disc be imagined to move from left to right, then Fig. 5 represents the position of the pump at the beginning of a suction stroke. The plunger is at the bottom of the cylinder, and the pump is just approaching a suction port B. As the travel of the disc brings the pump over this suction port the spring simultaneously causes the roller to move up the surface of the cone F_1, carrying the plunger with it, and drawing in a charge of oil. As the travel of the disc continues, the pump reaches the position shown in Fig. 6; the suction port is closed, and the vertical movement of the plunger ceases while the roller is moving over the flat stop pin F. Further travel of the pump disc brings the pump over the delivery port B, and as it is passing over this port the plunger is forced downwards by the roller moving over the leading side of the

cone F_2, and the contents of the cylinder are forcibly discharged to their destination, as shown in Fig 7, until the end of the discharge stroke. As the travel of the disc still further proceeds, the pump is brought over the next suction port, and the cycle of operations is repeated. It will be noticed that the stop pins F are adjustable, and, obviously, if the stop pin F is screwed downwards, the travel of the plunger will be correspondingly limited, and the amount of oil drawn in and delivered for that particular stroke correspondingly reduced. A small but important point is the fact that the cones are not made adjustable. The adjustment of the stroke might obviously be secured in this way, but it would have the disadvantage that the plunger would not be forced to the bottom of its stroke, and an air lock might be formed and retained in the pump and seriously interfere with its efficiency. The rotation of the pump disc may of course be obtained in a variety of ways. In the particular model illustrated, it is secured by the to-and-fro motion of the pawl rod D, which acts on the ratchet teeth caught in the periphery of the pump disc. A catch pawl D prevents the disc slipping back between the strokes. The pawl rod D is operated from the engine at the rate of about 30 strokes per minute, and the disc makes about one revolution in every minute. The adjustment provided permits the driver to vary the feed to each of the points between the limits of 5 and 15 drops of oil per stroke of the pump, or, in other words, per minute.

The six feed pipes of the lubricator are led respectively one to each of the cylinders to lubricate the pistons and gudgeon pins, one to each of the main crank shaft bearings, and one to each of the crank pins. To reach the crank pins the oil is fed into circular gutters fixed on the crank webs from which ducts are bored to the crank pin journal, and the oil finds its way to the crank pins by centrifugal force.

Governor.

To anyone who has made even a superficial study of motor

car design it is perfectly evident that one of the first requirements of the engine is that it should be as flexible in regard to speed and power as possible, and entirely automatic in all its functions, so that it shall demand the minimum of attention from the driver, and allow him to devote his entire attention to the actual driving of the vehicle and to other traffic. In other words, it is desirable that an engine can be set by the driver to run at any desired speed within its minimum and maximum limits, and which will maintain that said speed from no load up to full load as road conditions demand, without intervention on the part of the driver. It is with the attainment of this object in view that the governor referred to has been designed, and to it is entrusted the entire charge of the engine. It controls the speed of the engine, the mixture supplied to the engine by the carburettor, and the time of ignition.

Owing to the fact that an internal combustion engine is not self-starting, it is desirable during short halts to be able to run the engine as slowly and as quietly as possible. The usual method of doing this is to throttle down the charge and retard the ignition, but even then it is necessary to keep the engine considerably above its minimum speed, as under these conditions there is practically no self-recovery in the engine, for if the speed falls appreciably the likelihood is that it will stop through the consequent reduction of the charge. Unless the engine is controlled by a governor which will automatically correct any tendency to fall below this speed by increasing the charge, or to rise above it by reducing it, the minimum speed cannot be taken advantage of with its accompanying advantages of silent running, reduction of wear and tear, and economy of petrol. Again, the minimum speed governor is very useful for giving the engine a rest on long declines, when the car can be allowed to coast with the engine disconnected and kept running at its lowest speed, the driver, knowing that it can be instantly brought up to its normal speed without

resorting to the clumsy expedient of starting it up through the clutch. For moving through crowded traffic, or on narrow, tortuous roads, it is extremely useful to keep the engine running at about half speed; while for the open country anything between that and full speed will naturally be selected by the driver as a speed at which to run his engine. Unless the governor is designed to take charge of the engine under these widely varying conditions it is of little service, and this explains why a number of makers have eliminated that part of the engine's anatomy, as the governors they formally fitted practically only controlled the engine at one speed, and in many cases most inefficiently. An engine without a governor is really the equivalent of a "fiery untamed steed," and while good enough for a sporting man is not what is wanted for every-day work. The rotary portion of the governor is of the usual centrifugal type, but instead of being designed to act at one given speed, the sleeve actuated by the centrifugal pull of the balls against the spring begins to move off its lower stop at an engine speed of 180 R.P.M., and does not reach the top limit of its travel until the engine attains a speed of 950 R.P.M. The travel of the collar along the shaft is much greater than is usual in centrifugal governors.

The connecting link from the governor sleeve to the throttle valve is of a length variable by the control lever. In other words, the relative position of the throttle valve to the governor sleeve can be varied by the driver. This control lever therefore fixes the speed or point of travel of the governor sleeve at which cut-off is to take place, and thus sets the engine instantly to run at any desired speed within the given range. The throttle valve is of the piston type, so that it can overshoot its cut-off position in either direction by an amount equal to the total travel that the governor sleeve can give it. In its lowest position the control lever sets the throttle valve just open when the motor is at rest, therefore the moment the motor is started up and reaches a speed of 180 R.P.M. the throttle valve com-

mences to close and the engine will run about 200 R.P.M. light. If set about one-third up, the engine will attain a speed of about 600 R.P.M., when the governor will once more close the throttle valve, for, as will be seen by a reference to the governor characteristic in Fig. 8, this speed corresponds to about one-third of the travel of the governor sleeve. If the control lever is set right up to its control limit, the engine will rise to 950 R.P.M. before the governor closes the throttle. About one-eighth of the total travel of the governor sleeve is all that is required to give practically full admission, so that when set at any given speed for light load a comparatively small drop in speed will suffice to open the throttle full up. Obviously, therefore, at whatever speed the driver sets the control lever, the governor will hold the car at practically a constant speed on the level, uphill, and downhill, without any intervention on the part of the driver; so long, of course, as the gradient is not too steep for the engine to tackle, on the gear on which it is running, or the down grade so steep that it is sufficient to drive the engine above its normal speed even with all petrol cut off. The throttle valve is attached to the centre of a double lever, one end of which is controlled by the governor, the other by the control lever under the direction of the driver. Setting the control lever at the lowest point, the governor being at rest, the throttle is just open, consequently a very small speed of the engine is sufficient to close the throttle throughout the range of the control lever. At whatever speed it is set the engine will follow up to this speed, and the governor will hold it there.

CARBURETTOR.

One of the chief difficulties which meets the designer of a petrol motor car is that of ensuring at all times, and under all conditions, the supply of a proper mixture of fuel and air in the required quantities to the engine. In other words, to ensure that the ratio of the petrol or other fuel and air will be

approximately constant and in the best proportions to ensure rapid and complete combustion, and to ensure also that the fuel shall at the same time be thoroughly broken up or atomised. As an instance of the survival of the fittest, the syray type of carburettor may now be said to have practically monopolised the field. In its simplest forms this consists of a partial stricture in the suction or inlet pipe of the motor, into which a small nozzle projects the petrol, supply being normally maintained at a level slightly below the top of this nozzle. The reduction of pressure caused by the suction of the motor piston, during the suction stroke, causes a flow of petrol at this nozzle, and, if the velocity of the air is sufficient, this jet of petrol is broken up into a fine spray. By suitably proportioning the various dimensions of the apertures, an excellent mixture at a given speed and charge can be assured. The earlier motors were governed by a hit-and-miss principle, which insured their taking a full charge or none at all, and when running at their normal speed little difficulty with the mixture was experienced. Means were provided for closing the air passages to simplify the starting, and provision was made to supply the motor with a certain proportion of hot air in cold weather. When, however, throttle governing was introduced, and also mechanically operated inlet valves, the carburettor question became a complicated one, and in addition to this it became desirable to have as wide a range of speed as possible in the motor, so as to vary the speed of the car within fairly wide limits without change of gear and without declutching the engine from the car. The objection to this simple form of carburettor is that for lower speeds or lighter loads than the normal the mixture is poor, and conversely for higher speeds and loads than the normal the mixture is too rich.

To go fully into the history of the spray carburettor would require a paper by itself, but, suffice it to say, the usual practice is now to design carburettors of this type with the main air supply passages proportioned so as to give a good mixture at a

low speed, and to provide auxiliary air ports controlled either by the suction of the engine, the pressure of the exhaust gases, or the pressure of the circulating water. The design of the Albion carburettor is, generally speaking, on this principle, but the auxiliary air ports are controlled by the governor. It is practically impossible to design a carburettor from a theoretical basis, but the general design being fixed upon, the necessary data can be obtained from an experimental carburettor with graduated air ports fitted to the engine, coupled up to a dynamo, and tested at various speeds and loads. Readings were thus taken throughout the range, the best results being plotted, and the carburettor designed from this data. In Fig. 8, curve F shows the best areas for the extra air port at full load at various speeds as thus determined, and curve E for light loads. A section of the carburettor is shown in Fig. 9.

By means of a float cistern the supply of petrol is kept at a level slightly below the top of the nozzle. When the engine is started up, the whole air drawn into the cylinders passes through a *vena contracta*, and the reduction of pressure at the nozzle causes a fine jet of petrol which commingles with the air; the petrol is thoroughly atomised by the rush of air and carried into the cylinders. In the annular chamber round this *vena contracta*, there is an air port covered by a flat sliding shutter, the shutter being directly connected to the governor, see Fig. 10. This shutter has therefore a definite position for each speed of the motor which can at once be determined from the governor characteristic, and the port which it covers is designed to give at the various speeds the area of opening as determined in the experiments above spoken of. This port is called the "speed air port." Another port is provided which is called the "load air port," and the piston throttle is arranged to uncover this port proportionately to the opening of the throttle valve; thus ensuring at all loads and all speeds a thoroughly satisfactory mixture to the engine independent of

any interference on the part of the driver, and maximum economy at all speeds. In Fig. 8 are seen the areas of the extra air ports at the various speeds, both for light and full loads. The conditions for intermediate loads being proportionally between these two curves, the action of these two ports will be clearly seen on the model of the governor gear. A constant air adjustment is provided to compensate for variations in atmospheric conditions and variations in fuel.

Ignition.

After a most careful investigation of the advantages and disadvantages of all the various methods of ignition, the system known as low tension magneto ignition has been adopted in which the current is generated by a magneto driven direct from the engine, one end of the armature coil being connected directly to earth, or, in other words, the framework of the engine or vehicle, the other or live end of the armature coil being connected to the ignition plugs which consist of mechanically operated make-and-break circuits in the combustion chamber, Fig. 11. Such a system properly designed and carried out has immense advantages over any of the other existing systems. One great advantage connected with its use is that no batteries or accumulators are required. While this is an advantage in this country, its superiority in the case of vehicles for use in foreign countries is enormous, where charging of batteries is often a difficult and expensive matter. Another great advantage is that the electrical part of the mechanism is simple in the extreme, and in place of a complicated network of wires and connections which is found in high tension systems, there is one single conductor leading from the magneto to the ignition plugs. In the high tension systems with a fixed spark gap in the combustion chamber, it is necessary to employ a very high E.M.F. to break down the insulation resistance of the spark gap, especially when the compression in the engine is high. The spark will

often rather jump ½ inch outside than bridge a millimetre spark gap inside. In very damp weather also it is often extremely difficult to keep up satisfactory insulation in a high tension system.

Although low tension magneto ignition is rapidly gaining in popularity, its adoption would have been much more rapid and general but for the fact that, it is necessary to design the engine from the outset suitable for low tension magneto ignition, whereas a high tension ignition system can be fitted with a minimum of trouble to practically any existing engine without structural alterations. The magneto electric generator patented by the Albion Motor Car Co. is of the type having a fixed armature with external rotating field magnets energised by permanent magnets. Figs. 12 and 13 show two views of the armature. The armature core A is built up of soft iron sheets of the shape shown and bolted rigidly to the engine casing as may be convenient. The portion of the armature core recessed to accommodate the coil is shown at F. Fig. 14 shows a side elevation and Fig. 15 an end elevation of the complete generator. D is the crank shaft of the motor, to which is keyed a bronze spider H, to which in turn are bolted soft iron or steel pole pieces G_1, G, to convey the magnetic flux from the permanent magnets to the armature. J_1, J are the permanent magnets bolted across these pole pieces. The variation of the magnetic flux through the armature coil as the fields magnets rotate can be clearly seen in Figs. 16, 17, and 18. In Fig. 16 it is a maximum through the coil from left to right; in Fig. 17 it is just zero; and in Fig. 18 it is a maximum through the coil from right to left. As the field magnets rotate, therefore, an alternating current is generated in the coil F, the maximum E.M.F. being generated just after the pole pieces have passed the position shown in Fig. 17. By closing the circuit of the coil while the magnetic flux through it is a maximum, and by breaking the circuit when it is about the minimum, a slightly magnetising effect is

obtained which keeps up the permanent magnetism of the field magnets. This removes the objection raised in the early days against magneto ignition that, the magnets gradually weaken and require remagnetising every few months. The advantage of this distinctive feature of this system has been demonstrated by intentionally putting on specially weakened magnets, and after months of ordinary running it has been found that the magnets had slightly increased in strength. The ignition plug consists of a cast iron ignition port cover carrying one insulated contact which projects into the combustion chamber, and alongside this is an oscillating spindle having at its inner end an arm which bears upon the insulated contact pin, the contacts being provided with platinum tips. To the outer end of this spindle is keyed a crosshead or double-ended lever, to one end of which is attached a spring tending to rotate the spindle so as to bring the arm into contact with the insulated pin. The other end of the crosshead receives the blow from the striking rod which causes a sharp rupture of the circuit. This striking rod is lifted by a simple trip cam on the half-time shaft, and it is made as light as possible, so that the lapse of time between the moment that it is freed by the cam and the rupture of the electric circuit and consequent ignition of the charge is reduced to a minimum. This has been experimentally determined and found to be less than one four-hundredth of a second. The time at which the ignition takes place is varied by moving the position of the heel against which the lower end of the striking rod is pressed by the friction of the cam. Obviously, moving this heel has the same relative effect as rotating the ignition cam itself through a similar angle relatively to its shaft. When the heel is moved forward the ignition will obviously occur earlier, and later, when moved back, as the cam will then require to rotate further before ignition takes place. This will be clearly seen in the model. When carrying out the carburettor experiments above mentioned, the best moment for ignition at various loads and speeds was also carefully deter-

mined by the aid of the indicator diagrams both of the closed and continuous type. The results showed that the advance required was practically proportional to the speed. This is quite what one would expect, as the advance required principally to compensate for the time of combustion.

The advancing and retarding of the ignition is usually left to the judgment of the driver, but in this case there is no need to lean on such a "broken reed," as this governor presents an obvious and simple means of automatically ensuring the necessary advance at all times. With the governor characteristic on one hand and the curve of desired advance on the other, it is an easy matter to design a simple mechanism to effect the advance and retardation of the ignition. In Fig. 19 will be seen the apparent advance given by the governor, and the net or actual advance given at various speeds. In other words, the apparent advance from which has been deducted the time lag of the trip gear above mentioned.

Owing to the fact that no spark can take place unless the crank shaft is rotating with a certain angular velocity, it is permissible to set the ignition to take place, even at starting, slightly before the dead centre, as this said velocity ensures the *vis viva* of the fly-wheel carrying the engine over the dead centre. This reduces the arc of ignition advance throughout which the magneto is called upon to generate an effective spark, and enables one to key the magneto once for all in a fixed position to the crank shaft which might not be possible if too large an arc of advance were necessary. This magneto, however, shares in common with all Siemens' H armature magnetos, which are generally used for magneto ignition, the objection that as the speed rises, the point at which the maximum spark effect can be maintained advances in the direction of rotation, *i.e.*, occurs *later* in any one revolution. This, of course, is exactly the opposite characteristic from what one desires in a magneto; for, as already pointed out, as the speed rises the spark

requires to take place earlier in the revolution. By modifying the shape of the armature and field magnet poles, however, a magneto with this desirable negative characteristic has been obtained.

The curves shown on the screen indicate the spark length got at various speeds, and it is quite evident that as the speed rises the point of maximum spark effect recedes, so that there is not only an excellent starting spark, but at higher speeds the advancing of the spark, as is required by the engine, corresponds very closely with the most efficient point of sparking of the magneto.

Indicator Diagrams.

The indicator diagram of the Otto gas engine will doubtless be familiar to all present, and the indicator diagrams of petrol engines such as are under consideration are exactly similar, but as it is only within the last few years that indicators have been constructed suitable for taking diagrams of engines running at 1000 R.P.M. or so, it may be well to briefly consider them. It is only by their aid that a designer can tell whether his valve setting is correct, whether the exhaust or suction is being too much throttled, whether time of ignition is correct, the amount of leakage past piston and valves, and a number of other important details.

The diagrams shown on the screen were taken from a 12 H.P. Albion 2-cylinder engine driving a dynamo, the instrument used being a McInnes-Dobbie indicator similar in arrangement to the ordinary steam engine indicator, but specially designed for high speeds. The other diagrams were taken by the manograph, an instrument in which the pressure in the cylinder oscillates a small mirror about one axis in the plane of the mirror, and the mirror is oscillated about another axis at right angles to the first, and also in its own plane proportionately to the motion of the piston. A ray of light from a tiny Nernst lamp thrown on

to the mirror is reflected back on a screen, and gives a luminous diagram which can be photographically recorded on a sensitised plate.

As illustrating the importance of correct indicator diagrams to the designer, I may give an instance from my own experience which occurred some three years ago. In examining the diagrams taken from the 2-cylinder engine, I was much puzzled to find an explanation for the sudden increase of pressure towards the end of the exhaust stroke in some of the diagrams. Investigation showed that it only occurred in diagrams taken from the rear cylinder, and then the solution dawned upon me. A glance at Fig. 20 will explain matters at once. The engine under test had the two exhausts led by a yoke into a common exhaust pipe. This diagram shows what is happening simultaneously in the two cylinders throughout the cycle. Looking at the point of the cycle in the rear cylinder, where the rise of pressure just mentioned occurs, the explanation is at once seen. The piston in the rear cylinder is nearing the end of the exhaust stroke, and the pressure in this cylinder is practically atmospheric when suddenly the exhaust valve of the front cylinder opens, and the gases in the front cylinder at a pressure of perhaps 40 lbs. are suddenly released and discharged into the yoke piece. There is consequently a rush of exhaust gases back into the rear cylinder, and a corresponding increase of pressure in it until the dead centre is reached a moment later, when the exhaust valve closes. The suction valve opens immediately after the dead centre, and the pressure drops again rapidly, but although the negative work done may be small, there is this very serious drawback, that the contents of this cylinder, which are purely exhaust gases, have been blown out into the suction pipe, and will be immediately carried back again during the suction stroke, resulting in a corresponding weakening of the total charge. Of course, the obvious cure is to have separate exhaust pipes, and so prevent interference. It is quite evident that many designers are oblivious of it, as it is still quite common practice to join up

the two exhausts of cylinders whose cycles only differ by a quarter of a phase from each other. One of the diagrams was sent to me by the firm manufacturing the indicator manograph, and is taken off a German engine. It shows very distinctly the effect just referred to. I have also seen it on diagrams of leading French engines.

THE "JAMES WATT" ANNIVERSARY DINNER.

THE "James Watt" Anniversary Dinner was held under the auspices of the Institution on the evening of Friday, 18th January, 1907, in the Grosvenor Restaurant, Glasgow. The company numbered over 420 gentlemen. Mr James Gilchrist occupied the chair, and the croupiers were Messrs. C. P. Hogg, R. H. B. Thomson, John Ward, and A. D. Wedgwood. At the Chairman's table were the Hon. Lord Provost, William Bilsland, D.L.; The Right Hon. Lord Kelvin, P.C., O.M., G.C.V.O.; The Right Hon. Lord Inverclyde; The Right Hon. Lord Kingsburgh, P.C., K.C., K.C.B.; Lord Justice Clerk of Scotland; Col. Sir John Bingham, Bart.; Sir John Ure Primrose, Bart.; Sir William R. Copland; Sir James Fleming; Sir A. B. W. Kennedy, President, Institution of Civil Engineers; Mr. A. Ure, K.C., M.P., Solicitor General for Scotland; Rear-Admiral J. E. Bearcroft, V.C., M.V.O.; Lieut.-Col. G. Verner, K.O.S.B.; Col. J. M. Denny; Mr Robert Duncan, M.P.; Mr Alex. Findlay, M.P.; Sheriff-Substitute T. A. Fyfe; Com. F. T. Meyrick, R.N.; Prof. Andrew Gray, M.A., LL.D.; Dr. R. T. Moore, President, Mining Institute of Scotland; Mr W. G. Dugdale, President, North-East Coast Institution of Engineers and Shipbuilders; Mr D. A. Matheson, President, Glasgow Association of Students, Institution of Civil Engineers; Deacon-Convener Kirkwood; Mr T. B. Rogerson, President, West of Scotland Iron and Steel Institute; Mr Nathaniel Dunlop; Mr Francis Henderson; Dr. J. T. Bottomley; Dean of Guild Mason; Mr James Weir; Prof. A. Barr, D.Sc.; Mr James Nicol, City Chamberlain; Mr Laurence MacBrayne; Mr James Donald; Mr John Cory; Mr George Russell; Mr Andrew Laing; Mr A. S. Biggart; Mr R. B. Macouat; Mr James Howden, and Mr James MacKechnie.

After dinner, the loyal toasts were given from the chair.

A letter of apology for absence was read from Sir Henry Campbell-Bannerman, Prime Minister, who wrote:—"I regret that I am unable to accept your invitation, as I am not dining out. I am, however, much obliged for your kindness, and will be glad on some other occasion to avail myself of the invitation."

Vice-Admiral Engineer Miyabara, President of the Engineering Society at Tokio, sent the following message to the Members of the Institution:—"Once more we cable you our congratulations on the anniversary of the birth of James Watt. Although separated by nearly half the earth's circumference, and for the most part of a different race, the common cause brings us together in Tokio as it brings you in Glasgow. We greet you as our elder brethren and fellow-workers labouring in the same field."

In reply, the following message was cabled to the Engineers in Tokio, who celebrated their Watt anniversary the following day in Tokio:—"We, the Engineers and Shipbuilders in Scotland, assembled to honour the memory of Watt, heartily reciprocate the kindly greetings and sentiments contained in your message of to-day, and desire to express the hope that a cordial friendship may always exist between the engineers of Japan and Britain—a friendship based on truths and characteristics which stamped Watt 'a most excellent and amiable man,' and one who 'never failed to put all impostures out of countenance.' Long life and prosperity to the engineers of Japan!"

Lord INVERCLYDE, in proposing "The Imperial Forces," said he trusted the day was long distant when the strength, the numbers, and the cost of the Army and Navy would be made a political party question. They had seen from the newspapers that the shipbuilding programme was certainly not being enlarged. That was false economy. It was asserted that the Navy of this country was equal to the navies of any other two countries. He believed that was so—on paper—but there were times when the vessels required to be

laid up for repairs. He would like to know if the British fleet, after the recent manœuvres, was an efficient power equal to any two fleets. The public had a right to know this. He did not think the fleet was as strong as it was thought to be. War was a horrible thing, but he did not believe in peace conferences. If Britain's fleet were stronger than the combined fleets of any three powers, that would be far more likely to make for peace than any arrangement for a reduction of armament. As to the Army, he believed Mr Haldane was doing his best to get an efficient Army. He had no fear in regard to efficiency, and he trusted the numbers would also be all that was required.

Rear-Admiral BEARCROFT, replying on behalf of his service, said it was a little difficult for him to say very much about the Navy, as at the present moment they hoped and believed that it was powerful enough to do whatever duties might be required of it. The last addition to the fleet, which had just started on her maiden cruise, was to be triplicated, and three others of the same class built. Although it would be more assuring, perhaps, to the greater number of his audience if more ships were to be laid down, it was worthy of consideration whether, in view of the enormous cost of ships of the present day, and the extraordinary rapidity with which improvements were effected, it was not advisable to wait until experiments had been made with the very newest ships. It was only fair to the British taxpayer who had to foot the bill. Admiral Bearcroft afterwards referred to the numerous changes which had been effected in the *personnel* of the Navy and in the educational training of the officers and men.

Lieutenant-Colonel VERNER also acknowledged on behalf of the Army, remarking that whatever changes might come in that branch of the service, or whatever opinions might be held as to its efficiency, the duty of everyone was the same—to keep up the patriotic belief in his country and in the Army.

Lord Kingsburgh.

Lord KINGSBURGH proposed "Engineering and Shipbuilding Industries." He said the old motto of Glasgow was "Let Glasgow Flourish," which was exhibited in the arms of the city in the form of a tree with a fish across it. It did not look very much like engineering. It might have something to do with shipbuilding, both as regarded the tree and the fish; but Glasgow might well say she had flourished by the development of engineering and shipbuilding. When his father was a boy nothing bigger than a fishing smack could get further than Port-Glasgow; and when his father came from Skye to school in Glasgow, he spent seven days between the Kyles of Bute and Greenock, owing to a persistent gale from the east. He was just on the point of absolute starvation when the wind abated, and he succeeded in getting to school. What a change had taken place since then! One of the greatest engineering works in the world had been the clearing of the Clyde to make it deep enough to bring the largest vessels up to the Broomielaw, and the keeping of it open so that they could get down again. In regard to shipbuilding, the Clyde was now one of the most celebrated places in the world.

Mr ROBERT DUNCAN acknowledged the toast.

Lord KELVIN, who was enthusiastically received, said he had the honour to propose the toast of "The Second City of the Empire." Glasgow was second to none in respect of the good management of its Municipal Corporation. At the present day the work of the Corporation was thoroughly worthy of the most distinguished times in the history of the city. Although the population of Glasgow had doubled in the past thirty-five years, the death-rate was just about the same as in 1870. Could there be a better illustration of how admirably the city had been managed? One great thing done for the public health was the bringing of water from Loch Katrine. He remembered that in 1832 Glasgow was recovering from a severe attack of cholera. There were other attacks of that disease, but after the introduction of the Loch Katrine water supply

Glasgow escaped practically untouched. Everything for the good of the people had been carefully considered, and the result was that Glasgow was a city that all must be proud of. The happiness of the people had been cared for by its rulers. Lord Kingsburgh had told them of the Clyde as a fishing stream. Perhaps there might be salmon again. The great work of purifying the Clyde had been going on, and one could conceive that notwithstanding the steamers navigating the river, the water might be so healthy, that not only fish would live in it, but the inhabitants on both sides of its banks might thrive in increased healthfulness above even the present high proportion that had been attained. The grand industries that had grown up on the Clyde had caused the names of Glasgow and Greenock to be admired throughout the world.

Lord Provost BILSLAND, in acknowledging, spoke of the high ideals of those who had gone before to make Glasgow a healthy city, and remarked that the municipal fathers of to-day were progressing also in the proper direction. So far as their municipal works were concerned, they were doing well for the citizens of the present generation and for those of the future. The youths of to-day had splendid educational opportunities in the Technical College and in the University in preparing themselves to carry on that work. He also congratulated the shipbuilding and engineering industries on their prosperous condition, and on being able to maintain the great reputation of Glasgow in the maritime world.

Mr ALEXANDER URE, Solicitor-General for Scotland, was entrusted with the toast of "The Institution of Engineers and Shipbuilders in Scotland." Tracing the history of the Institution from its inception a half a century ago, he stated that it started with the modest membership of 127, and now had the magnificent and astonishing membership of 1600. Those plain, blunt figures told a tale of rapid and remarkable progress, not perhaps more than was commensurate with the giant strides which the two great industries represented by those present had made during those

years. Nobody could dispute that the existence of the Institution was a great aid to the callings which the Members pursued and in which they were so deeply interested. He had often thought, and he dared say sometimes said, that the greatest achievement of man over the forces of nature was to be seen in the combined work of the engineer and the shipbuilder—an Atlantic greyhound ploughing the blue waters against a gale and heavy sea, performing her voyage over thousands of miles of ocean with a punctuality and regularity which would put the best-managed railway company to the blush. If one were to ask what it was that had mainly contributed to the greatness of Glasgow, and to the proud position which it now held among the cities of the world, the answer would be that it was due to the energy and the enterprise, the inventive genius, the courageous initiative, and the dogged pluck of the engineers and shipbuilders of the city.

The CHAIRMAN, with whose name the toast was coupled, said they were very proud of their achievements. They were day after day steadfastly endeavouring to build up a habitation and an Institution which would not only be an educational Institution for the city of Glasgow, but would be a fitting memorial of what they had done in their day for those who would succeed them.

The proceedings then concluded with the singing of "Auld Lang Syne."

SMOKING CONCERT.

Members of the Institution and their friends met at a Smoking Concert in the Banqueting Hall of the Grosvenor Restaurant, Gordon Street, Glasgow, on the evening of Saturday, 23rd March, 1907, at 7-30 p.m. Mr. John Ward, Vice-President, occupied the chair. Previous to the concert a reception was held in a room adjoining the hall. The toast of "The King" having been submitted, an excellent programme was rendered by well-known local artistes. The company numbered 410.

CONVERSAZIONE AND EXHIBITION.

On Wednesday evening, 1st May, 1907, the Jubilee day of the Institution, a conversazione and dance was held in the St. Andrew's Halls, Glasgow. Members and their friends together numbering upwards of 1000, were received by the President, Miss Gilchrist, and the Members of Council.

The dance was preceded by a promenade concert in the Grand Hall. At intervals during the evening there were cinematograph displays, and an excellent programme of vocal music rendered under the direction of Mr Walter Harvey.

A most interesting collection of shipbuilding and engineering models was exhibited in the Berkeley Hall.

LAYING OF MEMORIAL STONE OF NEW BUILDINGS FOR THE INSTITUTION.

The ceremony of laying the memorial stone of the new buildings, for the Institution, in Elmbank Street, was performed on 3rd May, 1907, by his Grace the Duke of Argyll, K.T., in presence of a representative gathering. The weather, which was cold and blustering, fortunately remained dry during the brief open-air proceedings. Among those assembled on the specially-erected platform were Mr James Gilchrist (President), the Duke of Argyll, Lord Inverclyde, Sir David Richmond, Bishop Campbell, Mr Nathaniel Dunlop, Principal Donald MacAlister, Mr C. P. Hogg (Convener of the Building Committee and Vice-President), Mr John Ward (Vice-President), Mr A. D. Wedgwood (Vice-President), Mr Edward H. Parker (Secretary), Dean of Guild Mason, and Mr J. B. Wilson (Architect). On the request of Mr. Gilchrist, prayer was offered by Bishop Campbell, after which a bottle containing a number of documents and newspapers was placed in the cavity by Mr Parker. Mr Gilchrist then gave a brief historical account of the growth of the Institution. He concluded by asking the Duke of Argyll to perform the ceremony of laying the memorial stone, and presented his Grace with a trowel.

His Grace said he was delighted to be present on that occasion, and expressed the hope that the new buildings would prove a nerve and brain centre to assist in increasing the commerce and prosperity of Glasgow.

The stone having been lowered into position, Mr Wilson, the architect, presented the Duke of Argyll with a mallet, with which he tapped the stone, remarking as he did so—"I now

declare this stone to be well and truly laid." The trowel was of operative design with an ivory handle, the blade being surmounted with the ducal arms, and bearing the following inscription:—This trowel was used by his Grace the Duke of Argyll, K.T., in laying the memorial stone of the new buildings for the Institution of Engineers and Shipbuilders in Scotland. —Glasgow, 3rd May, 1907." Beneath the inscription was engraved the seal of the Institution and the City of Glasgow arms. On the completion of the ceremony loud cheers were raised by the spectators. A company of invited guests afterwards adjourned to the Windsor Hotel, where luncheon was served.

The luncheon was presided over by Mr James Gilchrist, President of the Institution, and the croupiers were Messrs. W. M. Alston, William Melville, A. D. Wedgwood, James Weir, Alexander Cleghorn, and D. A. Matheson. Among others present in addition to those who were on the platform at the stone-laying ceremony were Lord Provost Bilsland, Sir John Ure Primrose, Bart.; Sir William Arrol, Deacon-Convener Kirkwood, Prof. Archibald Barr, Prof. Andrew Gray, and Messrs. George Russell, A. F. Yarrow, D. McGee, A. Wilson, W. W. Lackie, D. C. Hamilton, Peter Wallace, Andrew Laing, James Donald, J. E. Harrison, William Brown, R. D. Munro, Thomas Kennedy, J. B. Henderson, and Laurence MacBrayne.

The CHAIRMAN having submitted the loyal toasts,

Lord Provost BILSLAND proposed "The Institution of Engineers and Shipbuilders in Scotland." He congratulated the Members of the Institution on the splendid record they had made during the past fifty years, and on securing a habitation worthy of the important position which they occupied in the scientific and industrial economy. The new buildings, the foundation stone of which had been laid that day, were an evidence, if any were needed, alike of the enterprise of its members and the progress of the City of Glasgow. Glasgow

Lord Provost Bilsland.

and the West of Scotland might well be proud of the engineering and shipbuilding industries, for they had been no inconsiderable factor in the development of the city and neighbourhood. The building of large ships of war and of peace on the Clyde at the present day showed that that river still retained its position of pre-eminence in engineering and shipbuilding concerns, and that its reputation, established by James Watt and Henry Bell, was being maintained and perpetuated by those who were their successors to-day. The progress of shipbuilding and engineering on the Clyde was most striking. He could not doubt that the new premises would increase the opportunities for progress, not only in marine, but also in the the other branches of engineering.

Mr GILCHRIST, in reply, said that he thought the new premises would amply fulfil all the requirements of the Institution. He would like to point out that the Council of the Institution was anxious to include young men training for all branches of engineering in the Students' Section, and desired the association of kindred institutions. The Institution was essentially educational, and one of its primary objects was the dissemination of knowledge among the Members.

Mr GILCHRIST afterwards submitted the health of the Duke of Argyll, remarking that one and all present felt it a great honour that he had that day consented to become an honorary Member of the Institution. In acknowledging the toast, which was received with enthusiasm, the Duke said he felt deeply honoured in having been admitted that day to what the President had modestly called their "select little midst." He had no doubt that the new headquarters of the Institution would be the mainspring of direction and energy throughout the great trades which signalised the Clyde. He could understand that it had been found necessary to part company with philosophy. He believed that the truest philosophy was not to philosophise. After having been bound in the sacred bonds of matrimony with their friends the philosophers for a wonderful space of

The Duke of Argyll.
time, it seemed that the Institution had found at last dual ownership to be intolerable. It was a great thing to have a place where ideas could be exchanged—a kind of crony club, which was directly useful to commerce and an advantage to the whole country. It seemed to him that their sciences embraced almost every important question of the present day in the advance of human knowledge. Fortunately, acting in co-operation with them they had the new Principal of Glasgow University. It seemed that the great questions of peace and war were in the hands of the chemist, and it was to co-operation with the University that they must look for advancement on those lines. One great difficulty which had been experienced by almost every country, and was nearly being experienced by the community of Glasgow to a serious degree not very long ago, was the question of the relations between capital and labour. It looked as if these questions became more serious in proportion as the population was uneducated, and that as education reached down from the Universities through the schools to the people, so much the more would workers be inclined to look before they leaped in the matter of strikes. Then there was the great question of competition to be considered, which would grow more dangerous in the future, because Asia would be in the field as well as Europe before very long. Certainly it required headquarters such as had been inaugurated that day, and the opportunity of putting the best brains of the country together, in order that in this century they might hold their own and preserve the proud place which the Clyde had already won.

The proceedings closed with the health of the Chairman, proposed by Sir JOHN URE PRIMROSE, Bart., to which Mr GILCHRIST briefly replied.

MINUTES OF PROCEEDINGS.

FIFTIETH SESSION.

THE FIRST GENERAL MEETING was held in the Lecture Hall, at 207 Bath Street, Glasgow, on Tuesday, 23rd October, 1906, at 8 p.m.

Mr JAMES GILCHRIST, President, occupied the Chair.

The Minutes of the Annual General Meeting, held on 1st May, 1906, having been printed in the billet calling the Meeting, were held as read, and signed by the President.

ANNUAL REPORT OF THE COUNCIL.

The PRESIDENT said the Council had pleasure in submitting the Annual Report, and called upon Mr William Brown to move its adoption.

Mr BROWN, in moving the adoption of the Report, said he thought that all present would agree with the words in the first paragraph of the Report, "that the Institution was in a sound and improving condition." With regard to the improved accommodation, there was an interesting item in the Report as to the arrangements made in connection with the new buildings, which ought to be specially noted. It was very pleasing indeed to know that the surplus revenue from last session had reached the sum stated, more particularly when, from the financial statement, it was seen that the extraordinary expenditure of last session over the previous year had greatly increased. This increase was really due to the assessor's fees and premiums in connection with the proposed new buildings. That properly should not appear in connection with the general fund of the Institution, but later on it would be credited to a building fund when that was finally established. Really speaking, the extraordinary expenditure was no more than the previous year. Altogether the Members might congratulate themselves that the

Institution was in a sound and improving condition and he therefore had much pleasure in moving the adoption of the Report.

The motion having been seconded by Mr JAMES ROWAN, was unanimously accepted.

The new Members elected at the previous meeting were duly admitted.

PREMIUMS OF BOOKS.

The Premiums of Books awarded at the Annual General Meeting, held on 1st May, 1906, were presented, viz.:—

To Dr. J. BRUHN for his paper on "Methods of Estimating the Strength of Ships," and to Mr A. MELENCOVICH for his paper on "Multiple Steam Turbines," read during Session 1904-05.

Thereafter the President delivered his Address. On the motion of Prof A. BARR, D.Sc., the President was awarded a vote of thanks for his Address.

A paper by Mr E. M. SPEAKMAN, on "The Development and Present Status of the Marine Steam Turbine in Land and Marine Work," was read by the Secretary.

The following candidates were duly elected:—

AS MEMBERS.

BERGIUS, WALTHER M'DONALD, Engineer, 169 Finnieston Street, Glasgow.

FISHBOURNE, J., Superintendent Engineer, Blagotaischinsk on Amur, East Siberia.

HADDOW, W. W., Engineer, Odah Villa, Bent Road, Hamilton.

LOADER JAMES F., Engineer, 41 Urbiztondo, Manila, Philippine Islands.

SCOTT, ROBERT B., Engineer, Rock Knowe, Tayport, N.B.

SMITH, CHARLES R., Engineer, 5 Albert Gate, Dowanhill, Glasgow.

TAINSH, JOSEPH R., Locomotive Engineer, Gorakhpur, United Provinces, India

WYLIE, ALEXANDER WILLIAMSON, Engineer, Vulcan Works, Johnstone.

From Associate Members.

HOWIE, WILLIAM, Chief Engineering Draughtsman, Messrs. D. Rollo & Sons, Liverpool.

LE CLAIR, LOUIS J., Works Manager, Société Anonyme Westinghouse, Sevran (S. & O.), France.

AS ASSOCIATE MEMBERS.

BLACK, JOHN C., Engineer, 34 Clyde Street, Dumbarton.

WYLIE, WILLIAM, Engineering Draughtsman, c/o Hunter, 15 Partickhill Road, Glasgow.

From Students.

HOLLAND, JOHN C., Engineer, 50 Gibson Street, Hillhead, Glasgow.
MAY, ANDREW, Engineer, Woodbourne, Partickhill, Glasgow.

AS ASSOCIATES.

CAMERON JOHN, Iron and Steel Merchant, 8 Osborne Villas, Cathcart, Glasgow.
FINDLAY, JAMES, Shipowner, 160 Hope Street, Glasgow.
STEWART, DONALD, Oil and Colour Merchant, 85 Cadogan Street, Glasgow.
WITHERS, WILLIAM E., Average Adjuster, 8 Harrington Street, Liverpool.

THE SECOND GENERAL MEETING was held in the Lecture Hall at 207 Bath Street, Glasgow, on Tuesday, 20th November, 1906, at 8 p.m.

Mr JAMES GILCHRIST, President, occupied the Chair.

THE LATE MR JAMES ROWAN.

The PRESIDENT said his first duty that evening was a somewhat painful one, and that was to inform those Members who had not already heard of the great loss which the Council of the Institution, and the Institution itself, had sustained through the very sudden and appalling death of Mr James Rowan, which took place at his residence late the previous evening. Mr Rowan, as all were aware, had been associated with the Institution since his boyhood. His father, Mr David Rowan, had done noble work for the Institution, and was at one time President. Mr James Rowan had served more than one term as a Member of Council, and was such at the time of his death. He could honestly say that Mr Rowan was always first in every good work connected with the Institution. The Council deeply deplored the loss of such a colleague, and had arranged to send an expression of sympathy to his sorrowing relatives. He had known Mr Rowan since he was quite a child, and esteemed him very highly as a friend. He felt the death of Mr Rowan so keenly that he could not say anything more.

The Minutes of the General Meeting, held on 23rd October, 1906, having been printed in the billet calling the Meeting, were held as read, and signed by the President.

The new Members elected at the previous Meeting were duly admitted.

The discussion on Mr E. M. SPEAKMAN'S paper on "The Development and Present Status of the Steam Turbine in Land and Marine Work," was begun and adjourned.

A paper by Mr. HUGH CAMPBELL on "Suction Gas Engines and Gas Plants" was read.

The following candidates were duly elected:—

AS MEMBERS.

FARNHAM, REGINALD V., Engineer, Wemyss Bay Hydropathic, Wemyss Bay.

MUNRO, HUGH, B.Sc., Engineer, Messrs. Glenfield & Kennedy, Ltd., Kilmarnock.

AS ASSOCIATE MEMBERS.

COLVILLE, ARTHUR JOHN, Engineer Draughtsman, 14 Newton Place, Glasgow.

MORISON, WILLIAM McA., Engineer, 29 Waterloo Street, Glasgow.

PATTERSON, DAVID, Engineer Draughtsman, 2 St. James Terrace, Hillhead, Glasgow.

From Students.

MORLEY, THOMAS B., B.Sc., Engineer, 2 Tantallon Terrace, Ibrox, Glasgow.

AS A STUDENT.

HARMAN, FREDERICK B. B., Engineer Draughtsman, 19 Balmoral Crescent, Crosshill, Glasgow.

THE THIRD GENERAL MEETING was held in the Lecture Hall at 207 Bath Street, Glasgow, on Tuesday, 18th December, 1906, at 8 p.m.

Mr JAMES GILCHRIST, President, occupied the chair.

The Minutes of the General Meeting, held on 20th November, 1906, having been printed in the billet calling the Meeting, were held as read, and signed by the President.

The new Members elected at the previous Meeting were duly admitted.

The discussion on Mr E. M. SPEAKMAN'S paper on "The Development and Present Status of the Steam Turbine in Land and Marine Work," was resumed and concluded.

On the motion of the President, Mr Speakman was awarded a vote of thanks for his paper.

The discussion on Mr HUGH CAMPBELL'S paper on "Suction Gas Engines and Gas Plants," was begun and adjourned.

The following candidates were duly elected:-

AS MEMBERS.

BENEDETTI, VITTORIO DE, Engineer, Galleria Umberto, 10, 27, Naples.

COOPER, ARTHUR WILLIAM, Engineer, 2 Westfield Place, Broughty Ferry.

CORMACK, JAMES, Engineer, 13 Darnley Avenue, Scotstoun.

DUNCAN, ALEXANDER, Marine Engineer, 20 Norse Road, Scotstoun.

HARTLEY, JOSEPH JABEZ, Engineer, c/o Messrs. Smith, Wincott & Co., 53 Waterloo Street, Glasgow.

HUTCHISON, JOHN BLACK, Shipbuilder, 27 Finnart Street, Greenock.

PAYNE, GEORGE, Engineer, 7 Travessa do Caes do Tojo, Lisbon.

SCHARINA, WILLIAM E. H., Electrical Engineer, 163 Hope Street, Glasgow.

From Associate Members.

DUNLOP, ALEXANDER, Engineer, 14 Derby Terrace, Sandyford, Glasgow.

From Students.

THOMSON, GRAHAME H., Engineer, 2 Marlborough Terrace, Glasgow.

AS ASSOCIATE MEMBERS.

FERNANDEZ, JUAN BAUTISTA, Engineer, Cebu Drydock Co., Opon, Mactan, Phillipine Islands.

KAWAHARA, GORO, Naval Architect, Mitsu-Bishi Dockyard, Nagasaki, Japan.

MCSKIMMING, CHARLES SCOTT, Electrical Engineer, 6 Hamilton Drive, Pollokshields, Glasgow.

WARNEFORD, JOHN R. K., Naval Architect, 9 Marchmont Terrace, Glasgow, W.

From Students.

BERG, WILLIAM E. G., Engineer, Bergshof, Hilversum, Holland.

BROOM, WILLIAM A., M.A., Chief Draughtsman, Rothmar, Campbeltown.

OLSEN, HAROLD MARTIN, Naval Architect, 11 Havelock Street, Partick.

AS AN ASSOCIATE.

MCGEOCH, LAUCHLAN A., Director, Messrs. William McGeoch & Co., 17 Kirklee Road, Kelvinside, Glasgow.

AS STUDENTS.

BARKER, CLAUDE W. J., Ship Draughtsman, 10 Lime Street, Whiteinch, Glasgow.

FORGAN, HARRY PETHERAN, Engineering Draughtsman, Sunnybraes, Lundin Links, Fifeshire.

LIETKE, JR., JOHN OTTO, Engineering Draughtsman, Glenelg, Kilmacolm.

MACKENZIE, JAMES GIBSON, Engineering Draughtsman, 22 Westland Drive, Whiteinch.

MACKENZIE, KENNETH, B. Eng., Engineering Draughtsman, 22 Westland Drive. Whiteinch.

MOYELL, ROBERT, Student of Naval Architecture, c/o Reid, 19 Havelock Street, Partick.

MUNRO, HARRY JAMES, Student of Engineering, c/o Craig, 592 Pollokshaws Road, Glasgow.

NEILL, JOHN, B.Sc., Engineering Draughtsman, 3 Levengrove Terrace, Dumbarton.

PRICHARD, JOHN LLOYD, Apprentice Engineer, Redargan, Drumoyne Drive, S. Govan.

ROGERS, GEORGE, Engineering Draughtsman, St. Leonards, Kilmacolm.

ROWE, HAROLD KINGDON, Engineer, 268 Kenmure Street, Pollokshields, Glasgow.

RUNCIE, GIRVAN HAMILTON, Apprentice Civil Engineer, 39 Cecil Street, Hillhead, Glasgow.

SCHERFFENBERG-MÖLLER, SIGURD, Student of Naval Architecture, c/o Reid, 19 Havelock Street, Partick.

SUTHERLAND, HUGH CAMPBELL, Apprentice Engineer, 171 North Bedley Street, Springburn, Glasgow.

THOMPSON, JR., THOMAS, B.A., B.Sc. (Lond.), Apprentice Engineer, 15 Doune Terrace, Kelvinside, N., Glasgow.

VASSILIOU, JOHN, Student of Civil Engineering, 268 Whitehill Street, Dennistoun. Glasgow.

THE FOURTH GENERAL MEETING was held in the Lecture Hall at 207 Bath Street, Glasgow, on Tuesday, 22nd January, 1907, at 8 p.m.

Mr JAMES GILCHRIST, President, occupied the chair.

The Minutes of the General Meeting, held on 18th December, 1906, having been printed in the billet calling the Meeting, were held as read, and signed by the President.

The new members elected at the previous Meeting were duly admitted.

The "James Watt" Dinner.

The President said he thought they might congratulate themselves on the great success that had attended the James Watt Dinner held on the Friday evening previous. It was a function brilliant in every respect, and a company the like of which he did not suppose had ever before sat down to dinner in the City of Gasgow. For the success of that meeting they were greatly indebted to the indomitable perseverance and industry of the committee in charge of the same, and who, at considerable inconvenience to themselves, did so much for the benefit of those who attended the dinner. He therefore moved a vote of thanks to the Dinner Committee. Before he closed his remarks he would like to say that they were also much indebted to Mr. Parker for the great care and trouble which he had taken to make the dinner the success which it undoubtedly was.

The vote of thanks was carried by acclamation.

On behalf of the Committee and himself, Mr Parker thanked the members of the Institution for the kind appreciation of their services.

The discussion on Mr Hugh Campbell's paper on "Suction Gas Engines and Gas Plants," was resumed and concluded.

On the motion of the President, Mr Campbell was awarded a vote of thanks for his paper.

A paper on "The Stability of Submarines," by Mr J. G. Johnstone, B.Sc., was read.

The following candidates were duly elected:—

as members.

Baird, James Oswald, Engineer, Aitken Street, Dalry, Ayrshire.

Bryce, John Snodgrass, Engineer, 11 Hunter Street, Paisley.

Dawson, Alexander, Engineer, Elgin Works, Clydebank.

Isdale, Malcolm Greig, Superintendent Engineer, 1 Church Road, Ibrox, Glasgow.

Stewart, Charles, Lloyd's Surveyor, 342 Argyle Street, Glasgow.

AS ASSOCIATE MEMBERS.

DAWSON, JAMES W., Engineering Draughtsman, c/o Landale, 3 Kirkwood Street, Ibrox, Glasgow.

KONDO, SHIGEYA, Naval Architect, Japanese Consulate, 34 West George Street, Glasgow.

MACFARLANE, ARCHIBALD, Engineering Draughtsman, 2 Glenavon Terrace, Partick.

MILLER, LOUIS M., Engineering Draughtsman, 69 Danes Drive, Scotstoun, Glasgow.

STEELE, JOHN P., Engineering Draughtsman, 2 Glenavon Terrace, Partick.

WALKER, JOHN P. S., Engineer, Laurel Bank, Uddingston.

From Students.

MALCOLM, WILLIAM, Engineer, 34 Thornwood Avenue, Partick.

AS AN ASSOCIATE.

M'MILLAN, ALEXANDER, Director and Secretary, Messrs Alley & McLellan, 25 Broomhill Terrace, Partick.

AS STUDENTS.

BOWDEN, JAMES K., Engineer, Camphill House, Langside, Glasgow.

BROWN, MATTHEW, Engineer, Edgehill Cottage, Dumbarton.

BUCHANAN, JOHN S., Engineering Draughtsman, 2 Smithfield Terrace, Cambuslang.

DARE, GEORGE E., Engineering Draughtsman, 37 Melville Street, Pollokshields, Glasgow.

DUNCAN, JOHN S., Engineer, 9 Balgray Terrace, Springburn, Glasgow.

GEMMELL, DAVID, Apprentice Engineer, 34 Carmichael Place, Langside, Glasgow.

KELSO, JOHN N., Engineer, 10 Highburgh Avenue, Dowanhill, Glasgow.

M'ARTHUR, WILLIAM, Apprentice Engineer, 438 Dumbarton Road, Partick.

MACBRAYNE, HUGH CLARK, Ship Draughtsman, 19 Brisbane St., Greenock.

MUNGALL, DAVID, Engineer, 24 Millbrae Crescent, Langside, Glasgow.

RENWICK, ROBERT, Engineer, 6 Balgray Terrace, Springburn, Glasgow.

SCHOETENSACK, FREDERICK F., Student of Naval Architecture, Longue rue d'Herenthals 31 Antwerp.

SHARP, CHARLES, Engineer, 4 Kelvingrove Street, Glasgow.

SLACK, CHARLES, Apprentice Engineer, 22 Carmichael Street, Govan.

TEMPLETON, JOHN C., Engineering Draughtsman, 135 Meadowpark Street, Dennistoun, Glasgow.

THE FIFTH GENERAL MEETING was held in the Lecture Hall at 207 Bath Street, Glasgow, on Tuesday, 19th February, 1907, at 8 p.m.

Mr JAMES GILCHRIST, President, occupied the chair.

The Minutes of the General Meeting, held on 22nd January, 1907, having been printed in the billet calling the Meeting, were held as read, and signed by the President.

The new Members elected at the previous Meeting were duly admitted.

The discussion on Mr J. G. JOHNSTONE's paper on "The Stability of Submarines" was begun and adjourned.

A paper on "The Mechanism of Power Transmission from Electric Motors," by Mr WILFRID L. SPENCE, was read.

The following Candidates were duly elected :—

AS MEMBERS.

ADAMSON, ADAM, Engineer, 256 Argyle Street, Glasgow.

ARNOT, DAVID, Engineering Manager, Messrs Wilson, Sons & Co., Ltd., Officinas das Docas, Rua das Coqueiras, Bahia, Brazil.

BROWN, DANIEL GEORGE, Surveyor, Bureau Veritas, 29 Waterloo Street, Glasgow.

BURDON, WILLIAM MURRAY, Engineer, Oakbank Cottage, Bellshill.

GRIMLEY, WILLIAM, Engineer, 177 Ledard Road, Langside, Glasgow.

HISLOP, ROBERT F., Engineer, 13 St. James Place, Paisley.

HUTCHINSON, ARTHUR JAMES, Electrical Engineer, Urban District Council Electricity Works, Albert Road, Farnworth, Bolton.

MACDONALD, ALFRED W., Engineer, 256 Argyle Street, Glasgow.

POOLEY, JOHN SIBTHORPE, Engineer, Eblana, Thorn Drive, Bearsden.

REID, JAMES LOW, Engineer, Hooghly Docking and Engineering Co., Ltd., Howrah, Bengal, India.

TRENIUKHINN, VLADIMIR, Civil Engineer, Vasilievsky, Ostrow, 15 line. N F. 2, St. Petersburg.

VICKERS, FRANK E., Engineer, 245 St. George's Road, Glasgow.

AS ASSOCIATE MEMBERS.

GREY, WALTER E., Engineering Draughtsman, 55 Clifford Street, Ibrox, Glasgow.

MCCOLL, JOHN, Engineering Draughtsman, 38 Stewartville Street, Partick.

ROBINSON, LESLIE H., Engineering Draughtsman, c/o Petrie, 1 Dunolly Gardens, Ibrox, Glasgow.

AS AN ASSOCIATE.

BAIRD, ALFRED W., of Messrs. Kelvin & White, 9 Whittinghame Drive, Kelvinside, Glasgow.

AS STUDENTS.

GREIG, ROBERT A., Engineering Draughtsman, 69 Exeter Drive, Partick. Glasgow.

MCPHERSON, DOUGAL C., Apprentice Engineer, 700 Cathcart Road, Glasgow.

SWANSON, GEORGE C., Student, Norwood, St. George's Road, Glasgow.

THE SIXTH GENERAL MEETING was held in the Lecture Hall at 207 Bath Street, Glasgow, on Tuesday, 19th March, 1907, at 8 p.m.

Mr WILLIAM MELVILLE, Vice-President, occupied the chair.

The Minutes of the General Meeting, held on 19th February, 1907, having been printed in the billet calling the Meeting, were held as read, and signed by the Chairman.

The new Members elected at the previous Meeting were duly admitted.

The following nominations for Office-bearers were then made:—*President*—Mr JOHN WARD; *Vice-Presidents*—Messrs D. A. MATHESON and JAMES WEIR; *Ordinary Members of Council*—Messrs THOMAS ARROL, E. HALL-BROWN, ROBERT LANG, DAVID MARSHALL, and C. C. SCOTT; *Member of Council from Associate Class*—Mr LAURENCE MACBRAYNE.

The discussion on Mr J. G. JOHNSTONE'S paper on "The Stability of Submarines" was resumed and concluded.

On the motion of the Chairman, Mr JOHNSTONE was awarded a vote of thanks for his paper.

The discussion on Mr WILFRID L. SPENCE'S paper on "The Mechanism of Power Transmission from Electric Motors" was begun and adjourned.

A paper on "The Most Economical Mean Effective Pressure for Steam Engines," by Mr R. Royds, M.Sc., was held as read.

The following candidates were duly elected:—

AS MEMBERS.

Alston, Charles Robert, Electrical Engineer, 12 Vinicombe Street, Hillhead, Glasgow.

de Kretser, Horace Egerton, Civil Engineer, Public Works Dept., Colombo, Ceylon.

Keay, Robert Dishington, Engineer, Hazelbank, Thorn Road, Bearsden.

McLeod, Andrew Macnicol, Gas Engineer, Gairbraid Terrace, Maryhill, Glasgow.

Main, Archibald Pollok, Managing Director of Messrs. R. & A. Main, Ltd., 2 Kirklee Gardens., Kelvinside, Glasgow.

Murray, Thomas, Consulting Engineer, 7 Kilmailing Road, Cathcart, Glasgow.

Scott, John W. P., Electrical Engineer, Viewfield, Lenzie.

Stott, Edgar, Engineer, 3 West Regent Street, Glasgow.

AS ASSOCIATE MEMBERS.

Baddeley, Douglas Stephenson, Electrical Engineer, 50 Wellington Street, Glasgow.

Lang, Hugh Montgomerie, Student of Naval Architecture, High Parish Manse, Paisley.

From Students.

Robertson, Robert McKenzie, Engineering Draughtsman, 26 McLelland Drive, Kilmarnock.

AS STUDENTS.

Dykes, James Claud, Student of Naval Architecture, c/o Renwick. 3 Park Drive, South, Whiteinch.

Ferguson, Duncan James, Apprentice Engineer, Croft en Righ, Renfrew,

Ferguson, Peter, Apprentice Engineer, Croft en Righ, Renfrew.

Jones, William Arthur, Engineering Draughtsman, Earleseat, Scotstounhill, Glasgow.

Macdonald, Peter, Student of Naval Architecture, 10 Wellington Street, Greenock.

The Annual General Meeting was held in the Lecture Hall at 207 Bath Street, Glasgow, on Tuesday, 23rd April, 1907, at 8 p.m.

Mr JAMES GILCHRIST, President, occupied the Chair.

The Minutes of the General Meeting, held on 19th March, 1907, having been printed in the billet calling the Meeting, were held as read, and signed by the President.

The new Members elected at the previous Meeting were duly admitted.

The following gentlemen were elected as Office-Bearers:—For Session 1907-08 — *President*, Mr JOHN WARD. For Sessions 1907-10—*Vice-Presidents*, Messrs D. A. MATHESON and JAMES WEIR; *Ordinary Members of Council*, Messrs THOMAS ARROL, E. HALL-BROWN, ROBERT LANG, DAVID MARSHALL, and C. C. SCOTT; *Member of Council from Associate, Class* Mr LAURENCE MACBRAYNE.

A premium of books was awarded to Mr E. M. SPEAKMAN, for his paper on "The Determination of the Principal Dimensions of the Steam Turbine, with Special Reference to Marine Work;" and to Mr H. NORMAN LEASK, for his paper on "Refuse Destructors," read during Session, 1905-06.

The discussion on Mr WILFRED L. SPENCE'S paper on "The Mechanism of Power Transmission from Electric Motors," was resumed and concluded.

On the motion of the President, Mr SPENCE was awarded a vote of thanks for his paper.

The discussion on Mr R. ROYDS' paper on "The Most Economical Mean Effective Pressure for Steam Engines" was begun and concluded.

On the motion of the President, Mr ROYDS was awarded a vote of thanks for his paper.

The following Candidates were duly elected:—

AS MEMBERS.

ADDINGLEY, JOHN HARTLEY, Founder, 16 Laurel Bank, Halifax.

CRAWFORD, ROBERT, Chief Ship Draughtsman, 17 Bellevue Crescent, Ayr.

MAITLAND, CREE, Engineer, Manager, The Crane Works, Parkhead, Glasgow.

PATERSON, MAURICE, Marine Engineer, 7 Hillside Crescent, Edinburgh.

PATERSON, WILLIAM W., Shipyard Manager, Mountstuart, Ayr.

PATRICK, FREDERICK WILLIAM, Engineer, Manager, Trafford Bank, Cawdor Road, Bishopbriggs, Glasgow.

REID, JAMES, Shipyard Manager, Station House, Troon.

SCOTT, ARCHIBALD, JUN., Assistant Superintending Engineer, 8 Kenmure Street, Pollokshields, Glasgow.

WALLACE, WILLIAM H., Managing Director, Ailsa Shipbuilding Co., Ltd., 25 Carrick Road, Ayr.

WATSON, WILLIAM P., Engineer, Manager, Turnberry, Bentinck Drive, Troon.

YARROW, HAROLD E., Shipbuilder, Fairlawn, Bearsden.

From Associate Members.

CALDWELL, JAMES, Electrical Engineer, 157 West George Street, Glasgow.

From Students.

SEMPLE, WILLIAM, Engineer, Coral Bank, Bertrohill Road, Shettleston.

AS ASSOCIATE MEMBERS.

MCVAY, JOSEPH A., Chief Engineer, Lighthouse Service, U.S.S. "Corrigidon," Cebu, Phillipine Islands.

SEMPLE, ROBERT, JUN., Engineer, Coral Bank, Bertrohill Road, Shettleston.

AS STUDENTS.

ESDON, DOUGLAS S., Apprentice Engineer, c/o White, 16 Brighton Place, Copland Road, Govan.

MORTIMER, JAMES B., Apprentice Engineer, 5 Ross Street, Paisley.

YOUNG, ALFRED LISTON, Apprentice Draughtsman, Kilkerran, Newlands Road, Newlands, Glasgow.

REPORT OF THE COUNCIL.

Session 1905-1906.

The Council presents herewith a report of the business transacted during the year, and in doing so has pleasure in stating that the Institution continues in a sound and improving condition. The growth in Membership resulted in a net increase of 61 for the year.

The Roll.

The changes which have taken place in the Roll during the year ending 30th September, 1906, are shown in the following statement:—

Session 1904-1905.		Session 1905-1906.	
Honorary Members,	8	... ...	7
Members, ...	1,023	... ...	1,031
Associate Members,	127	... ...	170
Associates, ...	91	... ...	83
Students, ...	202	... ...	221
	1,451		1,512

The elections were Members 48, Associate Members 36, Associates 3, and Students 39; while 1 Associate Member and 3 Students passed into the Members' Section, and 10 Students were transferred to the Class of Associate Members. In respect of deaths, resignations, and deletions the Membership was decreased by 65.

The Council laments the loss by death of the following:—Honorary Member—Sir Digby Murray, Bart. Members—James Anderson, Glasgow; J. M. Blair, Glasgow; Henry W. Brock, Dumbarton; W. A. Bryson, Leith; John B. Cameron,

Glasgow; Walter Drummond, Glasgow; James McEwan, Glasgow; John B. McHoul, Renfrew; John W. Ormiston, Glasgow; Prof. George Paton, Cirencester; James H. Rew, Airdrie; John Scott, Kinghorn; D. S. Sinclair, Glasgow; T. M. Welsh, Glasgow; Henry H. West, Liverpool; and Alexander Wyllie, Johnstone. Associates—Lord Inverclyde, Wemyss Bay; John McIntyre, Glasgow; Thomas Miller, Glasgow; James S. Napier, West Kilbride; and H. J. Watson, Glasgow.

Work of the Session.

Eight General Meetings and three Extraordinary General Meetings of the Institution were held. At the General Meetings, in addition to the President's Address, the following papers were read, and these, together with the discussions thereon, are embodied in Volume XLIX. of the Institution's Proceedings:—

"The Determination of the Principal Dimensions of the Steam Turbine, with Special Reference to Marine Work," by Mr E. M. Speakman.

"The Evolution and Prospects of the Elastic Fluid Turbine," by Mr R. M. Neilson.

"The Application of Calculating Charts to Slide-Valve Design," by Mr W. J. Goudie, B.Sc.

"The Screw Propeller Controversy," by Mr James Howden."

"Notes on Some Common Errors in the Use of Electric Motors for Machine Driving," by Mr W. A. Ker.

"Refuse Destructors," by Mr H. Norman Leask.

"On Equimomental Systems and Their Use in Applied Mechanics," by Mr R. F. Muirhead, B.A., D.Sc.

At the Extraordinary Meeting held on 21st November, 1905, the Minute of Agreement entered into on behalf of the Institution and the Royal Philosophical Society, whereby the Institution agreed *inter alia* to sell its interest in the property at

207 Bath Street, was confirmed, and the recommendations of the Council with respect to the purchasing of the property forming Nos. 33 and 35 Elmbank Street, and 39, 40, and 41 Elmbank Crescent, were adopted.

At subsequent Extraordinary Meetings alterations were made in Articles 23, 25, and 27 of the Articles of Association, respecting the election of office-bearers, which alterations are embodied in the Articles of Association as published in Volume XLIX. of the Institution's Proceedings.

A Smoking Concert was held in the banqueting hall of the Grosvenor Restaurant on 13th October, 1905, when Members and their friends, to the number of 350, listened to a well-arranged programme. Within the same hall on the 6th April, 1906, a similar concert took place; the programme was informal throughout, and the company was larger than on the previous occasion. Both concerts were greatly appreciated by those present.

A Conversazione and Exhibition of Models was held in the St. Andrew's Halls on Friday evening, 10th November, 1905. This function was a great success, and the company numbered about 1100, including ladies and gentlemen.

The "James Watt" Dinner took place on Friday evening, 19th January, 1906, at the Grosvenor Restaurant, and was attended by upwards of 400 gentlemen, including guests. This was a record attendance for the dinner.

The Council desires to urge every Member to use his best efforts towards promoting the welfare of the Institution, by regularly attending the Meetings, by contributing papers or taking part in discussions, and by securing new Members.

Students' Section.

Mr E. Hall-Brown, Chairman of the Section, opened the Session with an address. At the five subsequent meetings the undermentioned papers were read and discussed:—

"Modern Lathes and Their Capabilities," by Mr Robert Lang.

"Strength Calculations for Ships," by Mr Matthew W. Halley.

"Fuel Combustion in Boilers," by Mr Robert Baillie.

"The Testing of Materials," by Mr James Craig, B.Sc.

"The General Problem of Stability, with Reference to Submarines," by Mr J. G. Johnstone, B.Sc.

Visits were paid to the works of the following firms:—

Messrs John Brown & Co., Ltd., Clydebank, to the turbine-propelled steamer, "Carmania."

Messrs G. & J. Weir, Ltd., Cathcart.

Messrs William Beardmore & Co., Ltd., Parkhead Forge.

Messrs William Simons & Co., Ltd., Renfrew.

Messrs The Argyle Motors, Ltd., Alexandria, and to the Dawsholm Gas Works.

The thanks of the Institution are due to the principals and managers of these works for the courtesy and hospitality extended to the Students during the visits.

Improved Accommodation.

In the early days of the Session the Council appointed a Committee on New Buildings, with Mr C. P. Hogg as Convener. The Committee set to work immediately, and a site for new premises was secured at the corner of Elmbank Street and Elmbank Crescent. Architects practising in Glasgow were then invited to prepare plans, and fifty-one responded to the invitation. For about a fortnight the competitive plans were on exhibition to the public at the Wellesley Buildings, Sauchiehall Street, and after receiving the report of the assessor, Mr G. Washington Browne, of Edinburgh, the plans of Mr J. B. Wilson were accepted as best fulfilling the requirements of the Institution. Architecturally, the building will be a fine example of the later English Renaissance, and the construction generally will be of a fire-proof character. The site has been cleared, and building operations will be commenced at an early date.

Board of Governors of the Glasgow and West of Scotland Technical College.

The College continues to maintain its high position both in regard to the standard of work done and to the number of students. During the session just closed the day students numbered 535, and the evening students, 3,812; making a total of 4,347 individuals. The total number of "student-hours" was 399,867. These figures do not include enrolments for special courses, but refer only to the ordinary curriculum classes.

The central feature of the session was the opening of the first section of the new buildings of the College by the Right Honorable John Sinclair, M.P., on December 21st, 1905. The formal proceedings of the afternoon were followed by a conversazione held in the evening, at both of which functions the Institution was very fully represented.

A commencement has been made with the second section of the new building, and the foundation work has been completed, but operations have been suspended for lack of funds, as the Governors do not propose to incur liabilities for further contracts until they have some assurance that the necessary funds will be forthcoming. The equipment of the engineering laboratories has received very careful consideration during the past year, and the following are among the principal items of new apparatus which have been, or are about to be, installed, viz.:—Horizontal testing machine, 100 tons; gas engine and suction producer plant of 10 to 15 B.H.P.; horizontal steam engine; a Diesel engine; an Otto-cycle oil engine; a separately fired superheater; a compound air compressor; and an ammonia refrigerating plant.

It is most desirable that the Members of the Institution, and others interested in educational matters, should visit the Technical College with a view to becoming acquainted with the great and useful work that is being carried on there. Much profitable and interesting information would no doubt be obtained by those taking this trouble, and such an insight into the working of the Technical College would increase the interest of the older Mem-

bers in the education of those who in later years will have to take their places.

The Glasgow School of Art.

The work and organisation of the school is steadily developing, and the Governors are satisfied that it is satisfactorily meeting all the demands made upon it as a Central Institution for Higher Art Education. The surrounding counties and burghs, which are intended to act as feeders to the advanced art instruction given in the school, are working in co-ordination, and students are sent into the school from the counties comprising the Western Division, as well as from certain outside counties and from the Highlands.

The number of ordinary students for the past session was 639; and students in teachers' classes, 654; total, 1293.

The financial arrangements for the maintenance of the school are similar to those of the previous year, and the Governors trust that the citizens will, apart from the Corporation or Excise Residue Grants, take a deeper interest in its support, especially as the teaching of Art, as applied in so many important industries throughout the country, and particularly in Glasgow and the West of Scotland, is of the greatest value.

In connection with the training of teachers, the school is now a centre recognised by the Glasgow Provincial Committee, which has recently been called into existence, and is comprised of over forty members, representative of the principal educational authorities.

Board of Trade Consultative Committee.

The Institution was represented on the Board of Trade Consultative Committee by Mr John Duncan, Mr E. Hall-Brown, Mr Fred. Lobnitz, and Mr George McFarlane.

Four meetings were held during the year, on 24th October, 1905, 6th February, 1906; 24th April, 1906; and 3rd July, 1906, respectively.

The following is an abstract from the full report prepared by

the Committee. Full particulars of the information obtained regarding the above points will be found in the report of the Committee, filed in the Institution library.

The Consultative Committee beg to report upon the work which has engaged their attention for the year from 5th March, 1905 (being the date of their last report), to 5th March, 1906.

1. Subjects which had already been under notice of the Committee were:—

Water tube boilers.

Reduction of weight of stays in boilers — Reduction of scantlings.

Testing of steam pipes.

Furnishing midship sections, and plans of pumping arrangements to Board of Trade.

Engineer apprentices.

Alteration by Board of Trade of previous practice as to surveys without notice of alteration being given to the Board.

Fitting of freeing ports to shelter deck vessels.

Exemption of poop tonnage — Requirement as to tonnage opening.

Written communications to be given by the Board of Trade on important subjects instead of mere verbal statements by local surveyors.

Uniformity of practice among the surveyors—Sanitary arrangements on board steam trawlers.

Incompleted declaration of surveyor at port of building not to be called in question at port to which vesssl may be sent—Fitting of covers on steering gear rods and chains.

2. Subjects dealt with during the year which had not previously been before the Committee were:—

Fitting of double horn cleats on boat davits.

Cast iron frames for side lights.

Certificates of approval of material.

Provisional approval of arrangements when plans showing such arrangements have been demanded by Board of Trade.

Fitting of rails round poop hatches.

Amendment of Clause 20 by the instructions as to the survey of passenger accommodation—Deputation to Board of Trade.

Lloyd's Technical Committee.

The Institution was represented on the Technical Committee of Lloyd's Register of British and Foreign Shipping by Mr Sinclair Couper, Mr John Inglis, LL.D., Mr Richard Ramage, and Mr James Rowan.

The usual and statutory meetings of the Committee were held in London during the months of November, 1905, and April, 1906.

The following were some of the subjects considered, and on which recommendations were made by the Technical Committee:—

Ceiling in vessels.

The quality and testing of ship and boiler steel.

Cambered furnaces for boilers.

Equipment of trawlers.

Attachments to crowns of peak tanks.

The proposed alterations in the rules on these subjects, as approved by the Technical Committee, were adopted by the General Committee.

Committee on the Education and Training of Engineers.

In November, 1903, the Council of the Institution of Civil Engineers, acting upon a suggestion made by the Council of the Institution of Mechanical Engineers, invited all the leading Engineering Institutions of Great Britain to nominate representatives to act on a Committee "to consider and report . . . as to the the best methods of training for all classes of engineers." All the

Institutions approached complied with the request, and Professor Archibald Barr, D.Sc., was nominated by the Council to represent the Institution on that Committee. The Committee thus formed consisted of twelve Members, under the Chairmanship of Sir William White, K.C.B. The labours of the Committee extended over two-and-a-half years.

A Sub-Committee of five Members was appointed to consider the best school training for boys who purposed entering the engineering profession. Your representative, and Mr Alexander Gracie (representing the Institution of Naval Architects), acted upon this Sub-Committee as well as upon the General Committee. The Committee, as a whole, undertook the enquiry into the most suitable courses of training for youths entering any branch of the profession.

The Committee and Sub-Committee held a number of meetings in London, at nearly all of which your representative was present, but the greater part of the work was done by correspondence.

A schedule of questions relating to preparatory education, and another relating to scientific and practical training, were drawn up and issued to 120 representative men—many Members of the Institution being among the number. Nearly 100 replies were received. These were carefully classified and tabulated by the Secretaries of the Committee, and analyses of the opinions expressed are printed as appendices to the report, which was issued in April of this year. The labour involved in the preparation of the report was necessarily great, but not out of proportion to the importance of the matter upon which the Committee was asked to deliberate.

The Constitution of the Committee and the procedure adopted in obtaining and deliberating upon the views expressed by so many authorities, were such that the report will, no doubt, be generally accepted as the nearest approach attainable to an authoritative statement as to the most suitable education and training for men entering any branch of the engineering profession. No summary of the findings of the Committee could be

given, as the report itself is as concise as the matters dealt with would admit, and the print can be obtained by anyone interested.*

FINANCE.

The surplus revenue for the session ending 30th September, 1906, as shown by the Treasurer's Statement, appended hereto, is £541 13s. 11d.

* Copies of the report may be had from Messrs Wm. Clowes & Son, 23 Cockspur Street, London, S.W.

TREASURER'S INCOME AND EXPENDITURE ACCOUNT GENERAL

			1905-1906.	1904-1905.
ORDINARY INCOME.				
I. *Annual Subscriptions received—*				
Members, ...	£1744 0 0			
Associate Members, ...	156 0 0			
Associates, ...	123 0 0			
Students, ...	90 10 0			
			£2113 10 0	£2056 10 0
II. *Arrears of Subscriptions recovered, less expenses,*			67 14 4	70 14 4
III. *Sales of Transactions,*			8 3 6	5 15 6
IV. *Interests and Rents—*				
Interest on Clyde Trust Mortgages, less tax, ...	£51 4 4			
Interest on Deposit Receipts, *less* Income Tax, ...	113 8 1			
Interest on Glasgow Corporation Loan, ...	30 13 8			
West of Scotland Iron and Steel Institute, for use of Library,	7 7 0			
Students, Institution C.E., for use of Library, ...	10 0 0			
			212 13 1	81 7 9
EXTRAORDINARY INCOME.				
Surplus on Conversazione, ...	£0 3 8			
Surplus on James Watt Dinner, ...	15 5 0			
			15 8 8	3 19 8
			£2417 9 7	£2218 7 3

STATEMENT.
FOR YEAR ENDING 30TH SEPTEMBER, 1906
FUND.

ORDINARY EXPENDITURE.			1905-1906.	*1904-1905.*
I. *General Expenses*—				
Secretary's Salary, ...	£400 0 0			
Clerk's Salary, ...	72 0 0			
Institution's proportion of net cost of maintenance of Buildings, to 11/11/05, ...	3 15 11			
Library Books, ...	32 2 0			
Binding Periodicals and Papers,	10 19 10			
Stationery and Postages, etc.,	71 19 11			
Office Expenses, ...	29 4 0			
Advertising, Insurance, etc., ...	5 7 0			
Travelling Expenses, ...	3 9 6			
Expenses of Students' Opening Meeting, ...	3 14 7			
Law Expenses, ...	1 5 0			
Rent of Rooms from 11/11/05,	195 0 0			
			£828 17 9	*£789 7 10*
II. "*Transactions*" *Expenses*—				
Printing and Binding,	£526 19 3			
Lithography, ...	154 15 5			
Postages, ...	72 3 7			
Reporting, ...	16 18 0			
Delivery of Annual Volume, ...	25 13 0			
			796 9 3	*644 19 5*
EXTRAORDINARY EXPENDITURE.				
Expenditure in connection with competitive Plans for New Buildings—				
Assessor's fee and Premiums, ...	£202 10 0			
Advertising and Printing, ...	11 13 1			
Rent, and fitting up of rooms for exhibition,	29 16 10			
Sundry expenses,	1 4 5			
	£245 4 4			
Receipt Books for Subscriptions,	5 4 4			
			250 8 8	*27 4 0*
Surplus carried to Balance Sheet, ...			541 13 11	*756 16 0*
			£2417 9 7	*£2218 7 3*

BALANCE SHEET, AS AT

LIABILITIES.			As at 30th Sept., 1906.	*As at 30th Sept., 1905.*
I. *General Capital Account—*				
As at 1st Oct., 1905, ...	£6373 9 5			
Entry money, ...	83 0 0			
Surplus from Revenue, ...	541 13 11			
Surplus over Book value realised for Heritable Property and Fittings; *less* expenses, £82 19s 7d, ...	324 2 4			
			£7322 5 8	*£6373 9*
II. *New Buildings Account—*				
Subscriptions received, ...	£3624 16 0			
Interest on Deposit Receipts, ...	26 17 4			
			3651 13 4	
III. *Life Members' Subscriptions,*	...	..	350 0 0	*200 0 0*
IV. *Sundry Creditors,* ...	...	..	30 10 0	*12 16 8*
V. *Subscriptions paid in advance,*	...	..	48 10 0	*60 0 0*
VI. *Medal Funds—*				
Marine Engineering—				
Balance as at 1st Oct., 1905, £595 8 2				
Interest, £25 11s 5d, less Premiums of Books £10 5s 8d, ... 15 5 9		£610 13 11		
Railway Engineering—				
Balance as at 1st Oct., 1905, £378 10 7				
Interest, ... 16 5 9		394 16 4		
Students'—				
Balance as at 1st Oct., 1905, £19 1 3				
Interest, ... 0 16 4		19 17 7		
			1025 7 10	*993 0 0*
			£12428 6 10	*£7639 6 1*

30TH SEPTEMBER, 1906.

ASSETS.			As at 30th Sept., 1906.	As at 30th Sept. 1905.
I. *Heritable Property—*			£	£3547 8 1
II. *New Buildings Account—* In Bank, on Deposit Receipt, and Interest,			3638 2 4	. .
III. *Furniture and Fittings—* Valued at, say			20 0 0	65 10 0
IV. *Books in Library—* Valued at, say			500 0 0	500 0 0
V. *Investments—* Clyde Trust Mortgages, and Interest,...	£911 6 4			
Glasgow Corporation Loan and Interest, ...	1011 6 2			
			1922 12 6	2200 0 0
VI. *Medal Funds Investments—* Clyde Trust Mortgage and Interest,...	£914 1 6			
On Deposit Receipt and Interest, ...	107 6 2			
			1021 7 8	949 9 5
Note.—Balance of £4 0s 2d since lodged on Deposit Receipt.				
VII. *Arrears of Subscriptions—* Session 1905-1906—				
Members, ...	£186 0 0			
Associate Members, ...	7 0 0			
Associates, ...	3 0 0			
Students, ...	18 0 0			
	£214 0 0			
Previous sessions—				
Members, £165 10 0				
Associate Members, 3 0 0				
Associates, ... 3 0 0				
Students, ... 23 0 0				
	194 10 0			
Total,	£408 10 0			
Valued at, say ...			50 0 0	50 0 0
VIII. *Sundry Debtors—*			11 19 0	1 19 0
IX. *Cash—*				
In Bank, on Deposit Receipt	£5154 1 0			
Do. on Current Account,	95 14 9			
In Secretary's hands, ...	14 9 7			
			5264 5 4	324 19 7
			£12428 6 10	£7639 6 1

GLASGOW, *12th October, 1906.*—Audited and certified correct

DAVID BLACK, C.A., *Auditor.*

REPORT OF THE LIBRARY COMMITTEE.

DURING the session just closed the additions to the Library include 7 volumes, 8 pamphlets, and 59 Board of Trade Reports on boiler and steam-pipe explosions, by donation; 52 volumes by purchase; and 102 volumes received in exchange for the Proceedings of the Institution. Of the periodical publications received in exchange, and which lie on the tables in the reading-room, 29 were weekly and 22 monthly. Fifty-nine volumes were bound.

The Institution possesses a complete set of the Abridgments of Specifications of Patents dating from 1617, which is available for reference purposes in the Library.

The thanks of the Committee are due to the donors of the following works to the Library:—

DONATIONS TO THE LIBRARY.

Board of Trade Regulations, relating to the Examination Engineers in the Mercantile Marine. 8vo. London. 1906. From the Board of Trade.

Engineering Standards' Committee Publications:—

- British Standards for Trolley Groove and Wire.
- British Standard Specifications and Tables for Telegraph Material.
- British Standard Specification for Structural Steel for Bridges and General Building Construction.
- Report on Errors in Workmanship.
- Report on the Effects of Temperature on Insulating Material.
- Report on British Standard Systems for Limit Guages. (Running Fits).
- Report of the Locomotive Committee on Standard Locomotives for Indian Railways.

Goudie, W. J. Geometry of the Screw Propeller. 4to. London. 1906. From the Author.

Incorporated Accountants Year-Book, for 1905-6. 8vo. London. 1905. From Society of Accountants and Auditors.

Institution of Civil Engineers, Glasgow Association of Students. Address by the President, Donald A. Matheson, Nov., 1905. From the Author.

McGibbon, W. C. Indicator Diagrams for Marine Engineers. 4to. Glasgow. 1906. From the Author.

Proceedings of the International Engineering Congress, Chicago Exhibition. Two Vols. 8vo. New York. 1894. From Mrs Mansel.

Scott, Messrs. Two Centuries of Shipbuilding by the Scotts at Greenock. 8vo. London. 1906. From Scott's Shipbuilding & Engineering Co., Ltd.

Sothern, J. W. Marine Steam Turbine, a Practical Description of the Parsons' Steam Turbine. 8vo. London. 1906. From the Author.

BOOKS ADDED TO THE LIBRARY BY PURCHASE.

Abbott, Arthur V. Electrical Transmission of Energy. 4th Edition. 8vo. New York. 1904.

Anderson, W. C. Chemistry of Coke. 2nd Edition. 8vo. Glasgow. 1904.

Andrews, Leonard. Electricity Control. 8vo. London. 1904.

Atherton, W. H. Introduction to the Design of Beams, Girders, and Columns. 8vo. London. 1905.

Bell, G. J. Practical Treatise on Segmental and Elliptical Oblique or Skew Arches. 4to. Carlisle. 1896.

Blaine, R. G. Hydraulic Machinery. 2nd Edition. 8vo. London. 1905.

Bottone, S. R. Wireless Telegraphy and Hertzian Waves. 3rd Edition. 12mo. London. 1905.

Brassey's Naval Annual, 1906. 8vo. London. 1906.

Crapper, Ellis H. Electric and Magnetic Circuits. 8vo. London. 1903.

Dalby, W. E. Valves and Valve-Gear Mechanism. 8vo. London. 1906.

Donkin, Bryan. Text-Book on Gas, Air, and Oil Engines. 4th Edition. 8vo. London. 1905.

Fletcher, William. English and American Steam Carriages and Friction Engines. 8vo. London. 1904.

Foreman Patternmaker. Plating and Boilermaking. 8vo. London. 1895.

Gentsch, W. Steam Turbines, their Development, etc. 8vo. London. 1906.

Hay, A. H. Alternating Currents, their Theory, Generation, etc. 8vo. London. 1905.

Heck, R. C. H. Steam Engine and other Steam Motors. Vol. I. 8vo. London. 1905.

Hiscox, G. D. Compressed Air; its Production, Uses, and Applications. 4th Edition. 8vo. London. 1905.

Horner, Joseph. Tools for Engineers and Woodworkers. 8vo. London. 1905.

Horner, Joseph. Modern Milling Machines. 8vo. London. 1906.

Jackson, L. D'A. Hydraulic Manual. 4th Edition. 8vo. London. 1883.

Kinzbrunner, Charles. Testing of Continuous Current Machines. 8vo. London. 1904.

Lorenz, Hans, and others. Modern Refrigerating Machinery. Trans. by G. H. Pope. 8vo. New York. 1905.

Low, A. H. Technical Methods of Ore Analysis. 8vo. New York. 1905.

Lucke, C. E. Gas Engine Design. 8vo. New York. 1905.

Mahan, A. T. The Influence of Sea Power upon the French Revolution and Empire. Two Vols. 8vo. London. 1892.

Mahan, A. T. The Influence of Sea Power upon History, 1670-1783. 8vo. London. 1889.

Mellor, J. W. Crystallization of Iron and Steel. 8vo. London. 1905.

Middleton, R. E. Water Supply. 8vo. London. 1903.

Moissan, Henri. The Electric Furnace. Translated by A. T. de Mouilpied. 8vo. London. 1904.

Mathot, R. E. Gas Engines and Producer Gas Plants. 8vo. London. 1905.

Nicholson, William. Smoke Abatement. 8vo. London. 1905.

North, S. H. Oil Fuel: its Supply, Composition, and Application. 8vo. London. 1905.

Osmond, Floris. Microscopic Analysis of Metals. Edited by J. E. Stead. 8vo. London. 1904.

Pollock, D. Shipbuilding Industry: its History, Practice, Science, and Finance. 8vo. London. 1905.

Powles, H. H. P. Steam Boilers: their History and Development. 4to. London. 1905.

Rateau, A. Experimental Researches on the Flow of Steam through Nozzles and Orifices. Translated by H. B. Brydon. 8vo. London. 1905.

Redwood, Iltyd I. Lubricants, Oils and Greases. 8vo. New York. 1898.

Richards, Frank. Compressed Air. 8vo. New York. 1902.

Smith, C. F. Practical Alternating Currents and Alternating Current Testing. 8vo. Manchester.

Smith, R. H. Commercial Economy in Steam and other Thermal Power Plants. 8vo. London. 1905.

Smith, R. H. Electric Traction. 8vo. London. 1905.

Tayler, A. J. Wallis-. Refrigeration, Cold Storage, and Ice Making. 8vo. London. 1902.

Tayler, A. J. Wallis-. Aerial or Wire-Rope Tramways. 8vo. London. 1898.

Tayler, A. J. Wallis-. Pocket-Book of Refrigeration and Ice-Making. 3rd Edition. 8vo. London. 1904.

Tayler, A. J. Wallis-. Motor Vehicles for Business Purposes. 8vo. London. 1905.

Thompson, S. P. Dynamo-Electric Machinery. Vol. II. 8vo. London. 1905.

Twelvetrees, W. N. Concrete-Steel: a Treatise on the Theory

and Practice of Reinforced Concrete Construction. 8vo. London. 1905.

Wiener, A. E. Practical Calculations of Dynamo-Electric Machines. 2nd Edition. 8vo. New York. 1902.

Wilson, H. S. Practical Tool-Maker and Designer. 8vo. Philadelphia. 1898.

Wood, De Volson. Turbines, Theoretical and Practical. 2nd Edition. 8vo. New York. 1901.

Year-Book of Learned and Scientific Societies, 1905. 8vo. London. 1905.

THE INSTITUTION EXCHANGES TRANSACTIONS WITH THE FOLLOWING SOCIETIES, &c. :—

Aberdeen Association of Civil Engineers, Aberdeen.
American Institute of Electrical Engineers, New York.
American Institute of Mining Engineers, New York.
American Philosophical Society, Philadelphia.
American Society of Civil Engineers, New York.
American Society of Mechanical Engineers, New York.
American Society of Naval Engineers, Washington.
Association des Ingénieurs sortis des Écoles Spéciales de Gand, Belgium.
Association Technique Maritime, Paris.
Bristol Naturalists' Society, Bristol.
British Association for the Advancement of Science, London.
Bureau of Steam Engineering, Navy Department, Washington.
Canadian Institute, Toronto.
Canadian Society of Civil Engineers, Montreal.
Collegio degli Ingegneri e Architetti in Palermo, Palermo.
École Polytechnic, Paris.
Edinburgh Architectural Association, Edinburgh.
Electric Club, Pittsburgh.
Engineering Association of New South Wales, Sydney.
Engineering Society of the School of Practical Science, Toronto.
Franklin Institute, Philadelphia.

Geological Survey of Canada, Ottowa.
Hull and District Institution of Engineers and Naval Architects, Hull.
Institute of Marine Engineers, London.
Institution of Civil Engineers, London.
Institution of Civil Engineers of Ireland, Dublin.
Institution of Electrical Engineers, London.
Institution of Junior Engineers, London.
Institution of Mechanical Engineers, London.
Institution of Naval Architects, Japan.
Institution of Naval Architects, London.
Iron and Steel Institute, London.
Literary and Philosophical Society of Manchester, Manchester.
Liverpool Engineering Society, Liverpool.
Lloyd's Register of British and Foreign Shipping, London.
Magyar Mérnök es Épitesz-Egylet, Budapest.
Manchester Association of Engineers, Manchester.
Massachusetts Institute of Technology, Boston.
Midland Institute of Mining, Civil, and Mechanical Engineers, Barnsley.
Mining Institute of Scotland, Hamilton.
North-East Coast Institution of Engineers and Shipbuilders, Newcastle-on-Tyne.
North of England Institute of Mining and Mechanical Engineers, Newcastle-on-Tyne.
Nova Scotian Institute of Science, Halifax, N.S.
Osterreichischen Ingenieur und Architekten-Verein, Wien.
Patent Office, London.
Royal Dublin Society, Dublin.
Royal Philosophical Society, Glasgow.
Royal Scottish Society of Arts, Edinburgh.
Rugby Engineering Society, Rugby.
Schiffbautechnischen Gesellschaft, Berlin.
Scientific Library, U.S. Patent Office, Washington.
Smithsonian Institution, Washington.

Société d'Encouragement pour l'Industrie Nationale, Paris.
Société des Ingénieurs Civils de France, Paris.
Société des Sciences Physiques et Naturelles de Bordeaux, Bordeaux.
Société Industrielle de Mulhouse, Mulhouse.
Society of Arts, London.
Society of Engineers, London.
Society of Naval Architects and Marine Engineers, New York.
South Wales Institute of Engineers, Cardiff.
University of Texas Mineral Survey, Austin.
West of Scotland Iron and Steel Institute, Glasgow.
Western Society of Engineers, Chicago.

PUBLICATIONS RECEIVED PERIODICALLY IN EXCHANGE FOR INSTITUTION TRANSACTIONS:—

Weekly.

American Machinist.
Automobile Club Journal.
Automotor Journal.
Colliery Guardian.
Contract Journal.
Electrical Review.
Engineer.
Engineering.
Engineering Record.
Engineering Times.
Indian Engineering.
Industrial World.
Iron Age.
Iron and Coal Trades' Review.
Iron and Steel Trades' Journal.
Ironmonger.
L'Industria: Rivista Tecnica ed Economica.
Mechanical Engineer.
Mechanical World.
Nature.

Nautical Gazette.
Practical Engineer.
Public Health Engineer.
Revue Industrielle.
Railway Gazette.
Shipping World.
Stahl und Eisen.

Monthly.

African Engineering.
American Marine Engineer.
Bulletin International Engineering Congress.
Cassier's Magazine.
Cold Storage and Ice Trades Review.
Electric Journal.
Electrical Magazine.
Engineering Magazine.
Engineering Press Monthly Index.
Engineering Review.
Light Railway and Tramway Journal.
Machinery.
Machinery Market.
Marine Engineer.
Marine Engineering.
Mariner.
Mines and Minerals.
Page's Weekly.
Petroleum World.
Portefeuille Économique des Machines.
Science Abstracts.
South African Engineering.
Steamship.
The Indian and Eastern Engineer.
Tramway and Railway World.
Zentralblatt fuer Eisenhuetten, Wesen.

The Library closes for the Summer Holidays from the 11th July till 31st July inclusive.

Except during holidays and Saturdays, the Library is open each lawful day from 1st May till 30th September inclusive, from 9.30 A.M. till 5 P.M. On Saturdays the Library is open from 9.30 A.M. till 1 P.M.

On the 1st October and thereafter throughout the Winter Session, the Library is open daily (except Saturday) from 9.30 A.M. till 8 P.M., and on Meeting nights of the Institution and Royal Philosophical Society till 10 P.M., on Saturdays it is open from 9.30 A.M. till 2 P.M.

Members have the privilege of consulting the Books in the Library of the Royal Philosophical Society.

The use of the Library and Reading Room is open to Members, Associate Members, Associates, and Students.

The Portrait Album lies in the Library for the reception of Members' Portraits. Members are requested when forwarding Portraits to attach their Signatures to the bottom of Carte.

The Library Committee is desirous of calling the attention of Readers to the "Recommendation Book," where entries can be made of titles of books suggested as suitable for addition to the Library.

A List of the Papers read and Authors' Names, from the First to the Thirty-Third Sessions, will be found in Vol. XXXIII. of the Transactions.

As arranged by the Council, a Register Book for Students lies in the Library for the inspection of Members, the object being to assist Students of the Institution in finding suitable appointments.

E. HALL-BROWN,
Hon. Librarian and Convener

Annual Subscriptions are due at the commencement of each Session: viz.:—

MEMBERS, £2; ASSOCIATE MEMBERS, £1; ASSOCIATES, £1 10s; STUDENTS, 10s; LIFE MEMBERS, £25; LIFE ASSOCIATES, £20.

Membership Application Forms can be had from the Secretary or from the Sub-Librarian, at the Rooms, 207 Bath Street.

The Council, being desirons of rendering the transactions of the Institution as complete as possible, earnestly request the co-operation of Members in the preparing of Papers for reading and discussion at the General Meetings.

Early notice of such papers should be sent to the Secretary, so that the dates of reading may be arranged.

Copies of the reprint of Vol. 7 containing a paper on "The Loch Katrine Water Works," by Mr J. M. Gale, C.E., may be had from the Secretary; price to Members, 7/6.

Members of this Institution, who may be temporarily resident in Edinburgh, will, on application to the Secretary of the Royal Scottish Society of Arts, at his office, 117 George Street, be furnished with billets for attending the meetings of that Society.

The Meetings of the Royal Scottish Society of Arts are held on the 2nd and 4th Mondays of each month, from November till April, with the exception of the 4th Monday of December.

OBITUARY.

Members.

IMRIE BELL was born in Edinburgh in 1836, and was educated at the famous High School of his native city. Later he entered upon a most practical course of apprenticeship, serving four years under Mr J. Bertram, engineer and shipwright, Leith, and subsequently a regular pupilage under Messrs. Bell & Miller, civil engineers, Glasgow. Thereafter he acquired a knowledge of mine engineering at the Pelton Collieries, in the County of Durham, under Mr S. Reid. At the age of twenty Mr Bell was appointed resident engineer on the construction of the Meadowside graving dock and tidal basin in connection with the shipbuilding yard of Messrs. Tod & McGregor, Partick, now Messrs. D. & W. Henderson & Co.

In 1859 he accepted an appointment with the East India Railway Company, and continued in that employ until 1865. For a considerable portion of this period he was in charge of the construction of the southern half of the Jumna Bridge at Allahabad. On its completion, in 1865, he joined the staff of the late Mr Thomas Brassey, railway contractor, and was placed in charge of the construction of a bridge to accommodate the Delhi Railway over the Jumna at Sirsawa. The foundations for this bridge were in some cases sunk to a depth of 53 feet below water level, and the spans of 99 feet were carried on two lattice girders resting on single pier columns. The total length of the bridge between the abutments was 2,663 feet 6 inches. After carrying out this important contract, Mr Bell returned to this country, and, in 1870, received the appointment of superintendent engineer of the Leith Docks and Harbour. Three years later he became executive engineer to the State of Jersey, and while occupying this position he constructed the St. Heliers Harbour Works, and the lighthouse

at La Corbrère, which was the first lighthouse in the kingdom to be built of Portland cement. In 1878 he became associated with his old firm, Messrs. Bell & Miller, and joined the staff at their Westminster office. He returned to Glasgow in 1887, and became sole partner of the firm on the death of Mr. Miller. While in Glasgow he carried out quite a number of interesting works in the West of Scotland, among others with which he was associated may be mentioned the bridge over the Kelvin, on the Great Western Road, Glasgow. He retired from business in 1898, and took up his residence in Croydon, where he died on 21st November, 1906.

Mr. Bell was elected a Member of the Institution in 1880.

JOHN R. BIRD, who died in April, 1907, was born in Glasgow fifty-five years ago, and his career closed while he was still in his prime. The arduous duties of an engineer told upon his constitution, and the man who looked strong and robust died suddenly of heart failure in the midst of his work.

Mr Bird began life in his father's law office, where he decorated the margins of deeds with comical drawings and mechanical designs. The lathe and not the desk was his natural sphere, and resigning parchments and red tape, he became an apprentice with Messrs. Nelson & Company, locomotive builders, Glasgow. There his talent became apparent, and before he was out of his apprenticeship, he was placed in charge of the erection of two locomotive engines at the same time.

After serving some years in a patent agent's drawing office, he started business in Kingston Engine Works, Glasgow, where he remained all his days. He was his own draughtsman, inventor, and executant, and often pattern maker, taking the whole details of his own business upon his own shoulders. He was the special friend of inventors, who used to relate their

difficulties to him by the hour, and to which he listened with inexhaustible patience. It was a real pleasure to him to meditate, draw, and alter, until at length he enabled the stuck inventor to turn the corner of mechanical difficulty, transmuting his idea into a piece of working mechanism. He loved his work, but although a worker in iron, he was a steady reader of the best literature, and was an artist in oils of no mean order. In early days as an art student he sat in the same life class with David Murray, R.A., Charles Calvert, Tom Hunt, Duncan McKellar, James Aitken and other Glasgow artists who have made the Glasgow School famous throughout the world. He exhibited in more than one exhibition; and his oil pictures and portraits adorn the walls of his friends.

Mechanical inventions, however, were his deepest passion. He took out several patents in his own name, but latterly came to think that patents were vanity and vexation of spirit. So he allowed his inventions to go to the benefit of the customer to meet whose difficulties he had been consulted, turning his thoughts without regret to solve the next problem presented to him.

When the news of his sudden death passed from one to another alike among his business and private friends, it was accompanied by phrases such as this—"John Bird was one of the truest men we shall ever meet in this world." A life which earned such commendation from those among whom he moved and laboured, although he might not have climbed the glittering heights of fame, was surely not lived in vain.

Mr. Bird joined the Institution as a Member in 1890.

WALTER BROCK, son of Mr Henry Brock, a well-known citizen of Glasgow, was born in Glasgow on 21st January, 1836, and was educated in his native city. Having a natural aptitude and liking for mechanical work, he chose engineering

as his profession, and served his apprenticeship with Messrs. Robert Napier & Sons, Glasgow. To complete his training, and gain further professional experience, Mr Brock left Glasgow and spent some time in works in Brest and in London. He returned to Messrs. Napier as their manager, and in 1871 joined the late Peter Denny, LL.D., at Dumbarton. In that year he became managing partner in the engine works of Messrs. Denny & Co., and two years later, he was also assumed a partner at the shipyard of Messrs. William Denny & Bros.

Under his charge and direction the works of Messrs. Denny & Co. developed into one of the largest and best-equipped marine engineering establishments on the Clyde, more than doubling in size and number of men employed during the thirty years of Mr Brock's administration. His abilities as a sound practical engineer were widely recognised, and he was regarded as one of the foremost men of his profession. He possessed more than ordinary business characteristics, which were displayed on many occasions when his firm undertook the guaranteeing of high speeds and difficult conditions in connection with express steamers for cross channel service.

It was, however, with the quadruple expansion engine that Mr Brock achieved his special fame. His name was associated with the late Dr. Alexander Kirk in the introduction of the triple expansion engine, but he developed the quadruple type of engine in such a manner as to make it readily applicable to the existing machinery of steamers originally constructed on the compound principle, thus enabling vessels of this class, when requiring new boilers, to obtain all the advantages accruing from high pressure steam and additional expansion without encroachment on their space or serious alteration to existing machinery. But though his life work and success were bound up with the reciprocating steam engine, Mr Brock was always in touch with the progressive march of engineering science. On the death of Dr. Denny, he became senior partner in the

associated shipyard and engineering firms, and, in this capacity, the responsibility of initiative rested on him when Messrs. Denny agreed to give the Parsons' turbine an opportunity of demonstrating its commercial advantages. In all the problems connected with the fitting of turbines to the "King Edward"—the first commercial turbine steamer—Mr Brock took a keen interest, and his name will ever be linked with the success of the new engine. Six short years have elapsed since the "King Edward's" advent; but in that time he lived to see the turbine largely adopted for high-speed steamers; to see his son, the late Henry Brock, a member of the Engineering Commission which recommended the fitting of the turbine to the "Lusitania" and "Mauretania," the largest and fastest steamers afloat; and to see his own firm fulfilling orders for the new engine.

Mr Brock shrank from publicity, and took little part in affairs outside his business. Possessing a generous spirit, he subscribed largely to philanthropic institutions in Dumbarton, and as a captain of industry, he commanded the respect and esteem, not only of his employees, but of all who were brought into contact with him. He died at his residence, Levenford, Dumbarton, on 25th April, 1907.

Mr Brock became a Member of the Institution in 1865.

ANDREW BROWN, chairman and managing director of Messrs. William Simons & Co., Ltd., Renfrew, died at his residence, Castlehill, Renfrew, on 6th May, 1907. By his death the Institution has been robbed of its oldest Member with one exception, and one of the first Members to subscribe to the fund for the erection of the Institution buildings now in course of construction. The Clyde has also lost one of the ablest and most distinguished engineers and shipbuilders. Endowed with great vitality, Mr Brown, though well advanced

in his eighty-second year, made his daily visit to his works until about three weeks previous to his death. Always a keen student and a strenuous worker, he kept himself until the very end fully conversant with engineering problems which were exercising the minds of engineers generally, and particularly concerning matters connected with marine engineering.

Born in the Gorbals district of Glasgow, in October, 1825, he was apprenticed, at the age of fourteen, as a mechanical engineer, to Mr. John Neilson of the Oakbank Foundry, and after serving five years he became assistant mechanical draughtsman and foreman patternmaker to Messrs. William Craig & Co., formerly Claude Girdwood & Co., a notable firm in the early days of marine engineering. Two years later he entered the service of the still better known firm of Messrs. Tod & McGregor, engineers and shipbuilders, Partick, with whom he remained for a period of two years, gaining experience in the designing of engines for Peninsular and Oriental, and other steamers. For a year thereafter he was employed in the St. Rollox Works of the Caledonian Railway Company, where he obtained, under Mr Sinclair, much valuable experience in locomotive work. But Mr Brown's special leanings were all in the direction of the marine side of his chosen profession, and his opportunity of doing original work came in 1850, when he was appointed engineering manager to Messrs. A. & J. Inglis, Whitehall Foundry, Glasgow. For a period of ten years he filled this important position, and was responsible for the designing and completion of a large number of marine engines of various types. Among the first to see and appreciate the advantage of the link-motion type of valve gear, he was one of the pioneers in the introduction and fitting of this gear to marine engines. In 1850-1851 engines from his design were fitted on board the steam tug "Clyde," consisting of a pair of disconnected and entirely independent engines, driving the paddles, an arrangement which permitted each engine to be worked separately and in opposite directions, thus facilitat-

ing turning. The same steamer "Clyde" is still doing duty on the river Clyde.

Included in other works upon which he was engaged in 1851 1852, were two pairs of geared beam engines for screw steamers for service between Leith and London—the first on this route. Later Mr Brown was responsible for the construction, amongst other engines, of a set of three-cylinder direct-acting engines of 3000 I.H.P., which were fitted with outside slide valve, steam starting gear, and built crank shaft, features which have sometimes been ascribed to a later date.

In 1860, Mr Brown entered into partnership with the late Mr William Simons for carrying on at Renfrew the business of William Simons & Co., engineers and shipbuilders, which, since 1810, had been conducted at Greenock and Whiteinch. It was at this period that Mr Brown began his studies of problems relating to dredge plant, the result of which gave his own name and the firm with which he was so long connected, a world-wide reputation. Although devoting his energies primarily to the study of designing and constructing dredgers and kindred vessels, he never confined himself to this particular branch of engineering. His genius in realms outside of dredging matters is illustrated by the "Rothesay Castle," a Clyde paddle steamer designed and built in 1861, which attained for that period the remarkable speed of 20·25 miles per hour, and it is not unworthy of note that this vessel, under a different name, was employed forty years later on the Canadian Lakes. In the years 1867-8, he designed and built the Anchor Liner "India," the first vessel on the North Atlantic route fitted with four-cylinder compound surface condensing engines. About this time, too, he built the first passenger and vehicular steam ferry for traffic at Govan. Indeed, the construction of ferry steamers of special form afforded Mr Brown many opportunities for exercising his marvellous engineering skill. The employment of steam ferries on the Mersey fitted with propellers forward and aft was intro-

duced by him in the ferry steamer "Oxton," which was built for service between Liverpool and Birkenhead.

A more notable achievement still was the designing and construction of four-screw double-ended elevating-deck ferry steamers, a type of vessel which is now a well-known feature of cross-river communication in Glasgow. Mr Brown and his firm, later on, embodied the elevating deck principle in designing of steamers for carrying railway traffic—passengers and goods—across channels and waterways. Mr Brown's partner at Renfrew, Mr William Simons, retired from business about 1880, and on his retiral Mr Brown assumed as partners in the business his two sons, Mr William and Mr Walter Brown.

It was, of course, with the design and introduction of dredgers and dredging plant that Mr Brown's name was most intimately connected, simply because of the fact that, it was craft of this nature that he chose as the medium for the expression of the great engineering skill and ingenuity with which he was endowed. Other fields were open to and had their allurements for him, but he preferred to devote his study and care principally to dredgers and kindred vessels. Between 1861-1863 he was responsible for the design and construction of four self-propelling hopper barges for the Clyde Navigation Trustees, the first vessel of this type constructed in this country.

From 1868 to 1872 his firm constructed eleven bucket-ladder dredgers—stationary and propelling—for various home and foreign ports, including one, No. 9., for the Clyde Navigation Trustees. These hopper steamers and bucket-ladder barge-loading dredgers suggested the utility of combining the properties of a ladder dredger and hopper barge in one hull, and the invention and patenting of the type of vessel now known as "hopper" dredger followed. The first hopper dredgers were the "Canada" and the "St. Lawrence," vessels of 200 tons and 700 tons hopper capacity, constructed in 1872 and 1874 respectively for the Canadian Government.

Other highly important types and modifications followed, and since the first introduction of hopper dredging Mr Brown had to do with the designing and construction of dredgers ranging from 150 tons to 3000 tons hopper capacity, with a dredging capability of from 100 to 10,000 tons per hour. The pioneer sand pumping apparatus employed on the Mersey, which paved the way for the large pump dredgers now owned by the Mersey Docks and Harbour Board, was one of Mr Brown's early productions.

Mr Brown took an active interest in public affairs, and devoted considerable attention to promoting the welfare of the community of Renfrew. He served for thirty-five years on the Town Council of the Royal Burgh, during fifteen of which he was Provost. In recognition of his distinguished position as an engineer and shipbuilder, and in appreciation of his faithful services in the Town Council, the freedom of the Burgh of Renfrew was conferred upon him a month prior to his death.

Mr Brown became a Member of the Institution in 1859, and for a period of six years, from 1873 to 1879, served on the Council of the Institution, acting for three years as a Vice-President.

GEORGE COCKBURN was born at Johnstone, and commenced his apprenticeship in 1854 with Messrs. Tod & McGregor, engineers and shipbuilders, Partick, as patternmaker and modelmaker. He left that firm and entered the service of Messrs. D. & W. Henderson, with whom he stayed for some time before joining the Allan Line as assistant superintendent under Mr Walker.

In 1870 he started business with his father as a safety-valve maker, and subsequently he opened works in Sussex Street, Kinning Park, under the name of George Cockburn & Company, safety-valve makers. He re-

mained there until, in 1899, he amalgamated with his brother, Mr Robert Cockburn, also a maker of valves, who had works at McNeil Street, and they conjointly started new works at Cardonald (Cockburns Ltd.) He died on the 12th January, 1907, at the age of 70.

Mr Cockburn became a Member of the Institution in 1881.

Sir WILLIAM ROBERTSON COPLAND, LL.D., died from heart failure on 19th August, 1907, at his residence, Sandyford Place, Glasgow. Born in 1838, he received his early education at the High School of his native town, Stirling, and afterwards attended Glasgow University for five sessions, where he became a distinguished student in civil engineering. His practical training as a civil engineer was acquired in Glasgow, under Mr David Smith. Afterwards he joined the staff of the Edinburgh and Glasgow Railway Company, and was subsequently, for four years, burgh engineer of Paisley. In 1866 he began business in Glasgow, and soon acquired an extensive connection, particularly with corporate bodies. He made a special study of questions of drainage and of water supply, and in these departments of his profession he had, for many years, been recognised at home and abroad as a leading authority. Besides his large practice in designing and carrying out public works, he acted from time to time as consulting engineer in connection with various municipal and county schemes. He occupied a high position as arbiter and oversman, in the settlement of claims for compensation and cases of difference and dispute between parties. In this connection his quick grasp of affairs and sound judgment were greatly esteemed. He was appointed, by mutual agreement, standing arbiter between the Glasgow Corporation and the Caledonian Railway Company in connection with the construction of the Central Railway, authorised by the Act of 1888.

Sir William gave valuable public services to Glasgow. His name was specially associated with the extension and organisation of technical education, and with the erection of the splendid structure in Glasgow—the West of Scotland Technical College. The foundation stone of the new college was laid by the King in 1903, and the buildings were formally opened by the Secretary for Scotland. Sir William was chairman of the governing body of the college, which he also represented on the board of the West of Scotland Agricultural College. As a member of Glasgow University Court, he took a warm interest in the subject of university education. When the new medical and natural philosophy departments of the University were opened by the Prince of Wales, in April last, he received the honorary degree of LL.D. Last year the honour of knighthood was conferred upon him by the King. Among the public offices he served was that of Deacon-Convener of the Incorporated Trades of Glasgow, which gave him, *ex officio*, a seat in the Town Council for a period of two years.

Sir William was elected a Member of the Institution in 1864.

WILLIAM DOBSON was born in Fifeshire, and was for some time connected with Messrs. Barclay, Curle & Co., Glasgow. In 1863 he became manager of the Walker Shipyard of Messrs. C. Mitchell & Co., and remained in the service of that firm for a period of twenty years; leaving to start business as an iron and steel shipbuilder at Wincombe, under the style of William Dobson & Co.

Mr Dobson was a practical shipbuilder of considerable reputation, but took little part in public affairs. He was also a director of the Wallsend Shipway and Engineering Co. Failing health compelled him to relinquish business for some time

previous to his death, which took place on 25th June, 1907, at the age of 74 years.

Mr Dobson joined the Institution as a Member in 1871.

PATRICK DOYLE was born in 1849, and laid the foundation of his mathematical education under Bishop Fennelly, a distinguished Dunboyne scholar of Maynooth; and mathematics appear to have been his favourite study in after life. At the age of fifteen the subject of this notice entered the Civil Engineering College at Madras, and passed out of it after two and a half years with some distinction in mathematics, chemistry, and geology. Shortly after leaving college he joined the Public Works Department, and was placed in charge of two of the most important sub-divisions in the Madras Presidency. In this position his career was stormy. He was somewhat impatient of control, and disliked everything that could not stand the test of figures. His abilities, however, were recognised, and some of his observations in connection with the flow of water in rivers and channels were not unheeded by the highest authorities.

In 1878-79 he was chief superintendent of the Public Works of Perak, and in 1880 he went to Australia and headed the Queensland Examination List which enabled him to practise his profession in that Colony, where he held several official appointments and contributed largely to the colonial press on scientific and economic subjects.

Mr Doyle afterwards visited Port Darwin, Java, and other parts of the Malay Archipelago. He returned to India in 1883, and accepted the position of district board engineer in the Bellary and Godavari districts of the Madras Presidency. Thereafter he travelled through Upper India, and practised for some time as a consulting engineer in Oudh in connection with paper mills, ice companies, and other industries in and about

that district. Later Mr. Doyle founded "Indian Engineering," a weekly journal, recognised to be the most widely circulated professional journal in India and the East. For upwards of twenty years he was its proprietor and editor. Mr Doyle was a member of several scientific and technical societies, both in Britain and in the East. He left Calcutta on the 16th March, 1907, en route for England, and death overtook him at Bombay on the 27th day of the same month.

Mr Doyle was elected a Member of the Institution in 1886.

Ernest George Gearing was born at Brambridge, in the Parish of Twyford, Hampshire, on 24th May, 1849, and died suddenly in London on 8th February, 1907, in his fifty-eighth year, as the result of acute appendicitis. He served his apprenticeship as an engineer at the works of Messrs. C. & W. Walker, engineers, Donington, and thereafter spent three years with Messrs. G. & H. Bellis, engineers, Birmingham.

In 1874 Mr Gearing entered the marine engineering shops of the Union Steamship Company at Southampton, and had seven years continuous experience at sea, during four of which he occupied the post of chief engineer. In 1882 he joined the engineering staff of Messrs. J. & G. Thomson, shipbuilders and engineers, Clydebank, now merged in the firm of Messrs. John Brown & Co., Ltd., and for a period of six years he held the position of assistant manager. While there he was closely associated with the construction of machinery for many Atlantic liners and warships, notably the Inman fliers, "City of Paris" and "City of New York." For a brief period thereafter he was engineering manager of Messrs. Oswald Mordaunt & Company's establishment at Southampton, leaving that firm to accept service with the Inman and International Company, and becoming superintendent engineer of that Company in 1890. Two years later he accepted the post of general manager and secretary of the

Leeds Forge Company, in which position he continued till the death of Mr. Samson Fox two years ago, when he was appointed managing director of that firm.

Mr. Gearing was generally recognised as an authority on naval engineering and matters connected with boiler construction. For his services in various directions associated with the Royal Navy, he was appointed a chief engineer officer of the Naval Reserve.

He took little part in public life, but privately was an entertaining companion, and was devoted to outdoor pastimes.

Mr Gearing became a Member of the Institution in 1888.

ALEXANDER GOVAN was born in Glasgow a little over thirty-eight years ago. He was educated in his native city, where he served his apprenticeship as a mechanic. His choice of a trade was a wise one, for he possessed a natural bent towards mechanics and engineering, a bent which was afterwards fully developed at the Glasgow and West of Scotland Technical College. Here he was one of the most distinguished students, taking his diploma for mechanical drawing and the highest honours from the College, including a special medal for designing.

His first employment was as a mechanic in one of the largest power-loom weaving factories in Scotland, where his industry, ability, and ingenuity soon commanded the attention and admiration of the members of the firm. He afterwards entered the cycle trade in England, enlarging his knowledge of machinery and methods by practical experience.

On his return from England he met Mr. W. A. Smith, and the result of their first consultation was the establishment of the Hozier Engineering Company, the predecessor of Argyll Motors Limited. A very small concern at first, it was confronted with many difficulties. Mr Govan's first idea was

to work in the direction of steam traction, so that the first car he ever built was a steam car; but it did not reach his expectations, and, with the alacrity which was one of his leading characteristics, he changed his plans and began the construction of petrol cars. By a happy inspiration, he fixed on the well-known Scotch name of Argyll as the title of his new car, and the rise, progress, and final success of the Argyll motor is one of the most fascinating and striking examples of what can be done by downright hard work and perseverance, in face of all difficulties, by one gifted as Mr Govan was. The business grew and developed in a surprisingly rapid manner, and the vast undertaking of Argyll Motors Limited and its subsidiary concerns is in a great measure due to the genius and the untiring energy of Mr Govan, who at the time of his death was managing director of the Company. His unswerving integrity, as much as his business and mechanical talents, commanded the respect of all who came into contact with him; and to those under him he was at all times kind and considerate, invariably endeavouring to help along anyone who showed signs of perseverance and ability. He died after a brief illness at his residence, Normanhurst, Helensburgh, on 27th May, 1907.

Mr Govan joined the Institution as a Member in 1899.

JAMES MURRAY was born in Greenock on 27th December, 1837. He served his apprenticeship with Messrs. Caird & Co., Greenock, then obtained employment with Messrs. Denny & Co., Dumbarton, and afterwards spent some time in the shops of Messrs. Scott & Co., Greenock. For some years he was foreman with Messrs. Rankin & Blackmore, Greenock, and later occupied a similar position with Messrs. D. & W. Henderson, Partick. Leaving that firm he went to sea, and was for a long time connected as chief engineer with

the Anchor Line fleet. On retiring from this service he entered on the ship chandlering business in 1877. In 1898 Mr Murray acquired the well-known business of Messrs. Robert McKimie & Co., makers of ships' lamps, ventilators, etc., and a year later, to meet the demands of increasing business, he built the present extensive premises at Mavisbank Quay, Glasgow. He was the first to introduce into the United Kingdom metallic packing, which is now so familiar to every engineer. He was a member of the Gourock Town Council for a couple of terms, and in other directions associated himself with the social life of Gourock. He died in Glasgow on the 10th March, 1907.

Mr Murray joined the Institution as a Member in 1886.

HENRY M. RAIT was born in Glasgow on the 22nd March, 1837, and received his early education at the Glasgow High School, Neuweid-on-the-Rhine, and Glasgow University. At the last-mentioned Institution he studied mathematics under Professor Blackburn, and engineering under Professor Macquorn Rankine. He served an apprenticeship of five years, from 1885 to 1860, with Messrs. Aitken & Co., Cranstonhill, Glasgow, after which he was sent to Russia to fit up the pumping engines for the St. Petersburg waterworks, which were made by that firm. Returning to this country he was engaged by the firm as chief draughtsman. Subsequently he was appointed superintending engineer of Messrs. Valery, Frères et Fils at Marseilles, where he remained four years. Thereafter he occupied a similar position with the Inman Steamship Company, Liverpool, and later became managing partner in the Greenock Foundry Company. From 1871 to 1878 Mr Rait was senior partner of the firm of Messrs. Rait & Lindsay, successors to Messrs. James Aitken & Co., Cranstonhill, Glasgow; and from 1878 until his death, which took place in London on 2nd May, 1907, he was head of the firm of Messrs. Rait &

Gardner, engineers and dry dock owners, London. He was a member of several engineering societies, an ardent yachtsman, and was a man of kindly demeanour and pleasing personality.

Mr Rait joined the Institution as a Member in 1868.

ROBERT S. REID was born in Glasgow in 1847, and served his apprenticeship with Messrs. W. King & Co. He spent some years at sea, and in 1886 he commenced business on his own account as a consulting engineer. He died at his residence in Kilmacolm on 26th October, 1906.

Mr Reid joined the Institution as a Member in 1899.

HAZELTON ROBSON ROBSON was born at South Shields on 12th April, 1823, and received his early training and experience in engineering in the well-known works of Messrs. Hawthorne, Newcastle-on-Tyne, and on the Continent. At the early age of twenty-four he accepted a position of trust in the extension of Messrs. Hawthorne's works at Leith, and in this capacity he superintended several extensive and important contracts. Nine years later he was appointed engineering surveyor to the Board of Trade for the Clyde ports, comprising the area from the Mull of Galloway to Oban. At his suggestion the system of granting certificates to engineers after examination was inaugurated, and for a time he was the sole examiner for Scotland.

Retiring from the Board of Trade, he joined the firm of Messrs. David and William Henderson, shipbuilders and engineers, Partick, as a partner, and remained in that capacity for fifteen years. During the latter part of his life Mr Robson was frequently commissioned to conduct inquiries into causes of explosions, etc., and often acted as arbitrator in disputes

connected with shipbuilding and engineering matters. He maintained an active interest in various business concerns up to the last, and even on the day prior to his death he was engaged in the forenoon at a foundry in the west end of Glasgow, and died on the 21st November, 1906, after attending a meeting of directors.

Mr Robson joined the Institution as a Member at its foundation in 1857, and took an active interest in its welfare. For a period of nine years he served on the Council, during two of which—sessions 1875-76—he filled the presidential chair.

JAMES ROWAN, a native of Glasgow, was born on 18th March, 1854, being a son of the late Mr David Rowan, engineer, Glasgow. He gained his earlier education at the Glasgow Academy and the Glasgow University, and commenced his professional career in his father's works, where he served an apprenticeship of five years, passing in succession through the pattern shop, fitting department, and the drawing office, continuing in the latter for five years. In 1880 he became an assistant manager in the works, and five years later was assumed a partner with his father, when the title of the firm was changed to David Rowan & Son. In 1888 the complete control of the establishment came under his charge, and on the death of his father, in 1898, he took into partnership his brother-in-law, Mr William Thomson, who had been manager of the firm since 1891.

As an engineer, Mr Rowan was recognised as one of the most progressive in the Clyde district, and in conducting the affairs of his establishment efficiency was ever in his mind. He never for a moment hesitated to make any change, either in equipment or organisation, when he thought such would improve the condition and enhance the efficiency of the shops. Guided by a sound judgment in the adoption of original me-

thods he pushed their application so assiduously that in a short period he modernised his establishment, and placed it in the forefront of marine engineering and boiler making works in the Clyde district. His progressive policy led him to introduce into his works, after the great engineering dispute of 1897-98, the premium bonus system of paying wages, which proved so successful that it has since been adopted by a number of other firms.

Mr Rowan always took a keen and active interest in the affairs of the Institution, of which he was a past Vice-President, and, at the time of his death, a Member of Council. He was also President of the North-West Engineering Trades Employers' Association; and on the recent reconstitution of the Clyde Navigation Trust, he was elected from among the engineers and shipbuilders of the district as one of the representatives of the ratepayers. As Vice-Convener of the Workshops Committee, he devoted a large amount of time to the scheming out and arranging of the new Clyde Trust Navigation workshops at Renfrew.

He was a Member of the Institution of Civil Engineers, a Member of the Institution of Mechanical Engineers, a Member of the Institution of Naval Architects, and of several other technical societies.

His death took place very suddenly and unexpectedly at his residence in Glasgow, on the 19th November, 1906, at the age of fifty-two.

Mr Rowan joined the Institution as a Graduate in 1875, and was elected a Member in 1885.

JAMES ALEXANDER SMITH, eldest son of Mr Alexander Smith, Union Bank House, Glasgow, was born at Strathbungo, on 23rd February, 1872, and received his education at Hutcheson's Grammar School and the Technical College, Glasgow. He

served his apprenticeship with Messrs. Stewart & MacKenzie, Pollokshaws, and Messrs. J. Copeland & Co., Glasgow, after which he spent six months at sea in the capacity of third engineer. In 1893 he entered the drawing office of the Clydebank Shipbuilding and Engineering Co., whose works were subsequently acquired by Messrs. John Brown & Co., Ltd., and remained at that establishment for twelve years, during the last four of which he was chiefly employed as the engineering representative of the firm at the various Government dockyards, in connection with warships built for the British Admiralty at Clydebank. Two years before his death, which took place at Glasgow, on the 22nd November, 1906, he entered into partnership with Mr F. A. Russell, consulting engineer.

Mr Smith joined the Institution as a Graduate in 1894, and became a Member in 1903.

ROBERT WATSON was born in Glasgow, on 30th April, 1858, and received his education at the Glasgow High School. Having early evinced a mechanical turn of mind, Mr Watson was apprenticed to the firm of Messrs. Norman & Copland, engineers, Townhead, Glasgow. After serving his apprenticeship he gained additional engineering experience with Messrs. Walker & Henderson, Glasgow. Subsequently he became a partner of the firm of Messrs. George Watson, Jun., & Co., chemical manufacturers, and remained in that capacity until his death, which took place at Pollokshields on 2nd September, 1907. He was keenly interested in the development of the gas engine, and carried out numerous experiments on a gas engine of his own design.

Mr Watson joined the Institution as a Graduate in 1881, and was for some time Honorary Secretary of the Graduates' Section. He became a Member in 1901.

Associate Member.

GEORGE STEVENSON was born in Renfrewshire in 1875, and received his education at the Glasgow High School and the Glasgow and West of Scotland Technical College. He served his apprenticeship with Messrs. Fullerton, Hodgart & Barclay, engineers, Paisley. Thereafter he gained experience in boiler-making with Messrs Lindsay Burnet & Co., Govan. For a brief period he was in the service of Mr. A. W. Stewart, consulting engineer, whose employment he left, to start in business for himself. He died suddenly in Natal on 7th July, 1907.

Mr. Stevenson joined the Institution as a Graduate in 1898, and became an Associate Member in 1903.

Associates.

THOMAS AITKEN was born at Culross in 1821. After receiving a training as a shipbroker in Grangemouth, he joined the office staff of the London and Edinburgh Shipping Company. By sheer ability he gained promotion as manager of that Company at the age of forty-five, and at the time of his death was its chairman.

Mr Aitken held various public positions, serving on the Leith Dock Commission, the Edinburgh and Leith Chambers of Commerce, and the Edinburgh Merchant Company. He was a generous donor to charity, and in 1900 he gave the princely sum of £40,000 to the Royal Infirmary, Edinburgh, in commemoration of his two deceased wives. He died at his residence, Nivingston, Kinross, on 29th January, 1907.

Mr Aitken was an Associate of the Scottish Shipbuilders' Association at the Incorporation with the Institution in 1865.

WILLIAM ALEXANDER KINGHORN was born at Govan on 8th August, 1857, and was educated at Anderson's School, and at Gilbertfield House, Hamilton. His business training was acquired in the office of the Scottish Union and National Insurance Co., which firm he left in 1882 to start business on his own account, principally as the representative of Messrs. Clark, Chapman & Co., with which firm he was still connected at the time of his death. A shrewd man in business, he entered into schemes which interested him, with a peculiar enthusiasm and determination to master the most minute details. Mr Kinghorn took an active part in the affairs of the Incorporation of Hammermen, of which body he was a past Deacon.

In 1904 he was elected a Member of Council of the Institution from the Associate Section. He died in Glasgow on the evening of Friday, 9th August, 1907.

Mr Kinghorn was elected an Associate of the Institution in 1882.

Student.

JOHN C. RAMSAY was born in Glasgow, on 25th February, 1875, and served his apprenticeship as an engineer with Messrs. J. & G. Thomson, Clydebank. At the time of his death, which took place in London, on 19th July, 1907, he was an agent for the United States Metallic Packing Co., Ltd.

Mr Ramsay joined the Institution in 1901.

LIST OF HONORARY MEMBERS, MEMBERS, ASSOCIATE MEMBERS, ASSOCIATES, AND STUDENTS

AT CLOSE OF SESSION 1906-1907.

HONORARY MEMBERS.

	DATE OF ELECTION.
KELVIN, Lord, G.C.V.O., O.M., P.C., LL.D., D.C.L., Netherhall, Largs,	1859
BRASSEY, Lord, K.C.B., D.C.L., 4 Great George street, Westminster, London, S.W.,	1891
BLYTHSWOOD, Lord, Blythswood, Renfrewshire,	1891
KENNEDY, Sir A. B. W., LL.D., F.R.S., 17 Victoria street, London, S.W.,	1891
WHITE, Sir WILLIAM HENRY, K.C.B., F.R.S., LL.D., D.Sc., Cedar Croft, Putney Heath, London, S.W.,	1894
DURSTON, Sir A. J., K.C.B., Westcomlea, Park Road, Blackheath, London, S.E.,	1896
FROUDE, R. E., LL.D., F.R.S., Admiralty Experiment works, Gosport,	

MEMBERS.

	DATE OF ELECTION.
AAMUNDSEN, JENS L., Frederikshaldsgade 21, Copenhagen, Denmark,	24 Jan., 1899
ABERCROMBIE, ROBERT GRAHAM, Broad Street Engine Works, Alloa,	21 Mar., 1899
ADAM, J. MILLEN, Ibrox Iron works, Glasgow,	G. 25 Mar., 1890 M. 22 Jan., 1895
ADAMSON, ADAM, 141 Stevenson drive, Shawlands, Glasgow,	19 Feb., 1907
ADAMSON, JAMES, St. Quivox, Stopford road, Upton Manor, Essex,	23 Apr., 1889
ADAMSON, PETER HOGG, 2 Thornwood terrace, Partick,	19 Mar., 1901
ADDINGLEY, JOHN HARTLEY, 16 Laurel bank, Halifax, Yorks.,	23 Apr., 1907
AILSA, THE MOST HONOURABLE THE MARQUIS OF, Culzean castle, Maybole,	25 Jan., 1898

Names marked thus * were Members of Scottish Shipbuilders' Association at incorporation with Institution, 1865.

Names marked thus † are Life Members.

AITKEN, H. WALLACE, 147 Bath Street, Glasgow, {G. 24 Jan., 1888 M. 24 Jan., 1899

AITON, J. ARTHUR, Western Works, Hythe Road, Willesden Junction, London, N.W., 24 Nov., 1896

ALEXANDER, JOHN, Engineer, Barrhead, 19 Mar., 1901

ALEXANDER, JOHN, 39 Lawrence street, Partick, 24 Oct., 1905

ALLAN, ROBERT, Demerara Foundry, Georgetown, Demerara, 30 Apr., 1895

ALLEY, STEPHEN E., 5 Huntly gardens, Kelvinside, Glasgow, 23 Nov., 1897

†ALLIOTT, JAMES B., The Park, Nottingham, 21 Dec., 1864

ALSTON, CHARLES ROBERT, 12 Vinicombe street, Hillhead, Glasgow, 19 Mar., 1907

ALSTON, WILLIAM M., 24 Sardinia terrace, Hillhead, Glasgow, {G. 15 Feb., 1865 M. 18 Dec., 1877

†AMOS, ALEXANDER, Glen Alpine, Werris Creek, New South Wales, 21 Dec., 1886

†AMOS, ALEXANDER, Jun., Braeside, 81 Victoria Street (North), Darlinghurst, Sydney, New South Wales, 21 Dec., 1886

ANDERSON, ALEXANDER, 176 Balgray hill, Springburn, Glasgow, 24 Nov., 1903

ANDERSON, ALFRED WALTER, Blackness Foundry, Dundee, 27 Oct., 1903

†ANDERSON, E. ANDREW, c/o Clinton, 13 Holmhead street, Glasgow, 21 Feb., 1899

ANDERSON, GEORGE C., 13 Balmoral drive, Cambuslang, {G. 24 Dec., 1895 M. 27 Oct., 1903

ANDERSON, J. GODFREY, B.Sc., c/o Messrs James Templeton & Co., Greenhead, Glasgow, 19 Mar., 1901

†ANDERSON, JAMES, Ravelston, Great Western Road, Glasgow, 26 Nov., 1901

ANDERSON, JAMES H., Caledonian Railway, Glasgow, 20 Dec., 1892

ANDERSON, ROBERT, Clyde Street, Renfrew, 26 Jan., 1897

ANDERSON, WILLIAM MARTIN, 102 Union street, Glasgow, 18 Dec., 1900

ANDERSON, WILLIAM SMITH, Alderwood East, Port-Glasgow, 21 Nov., 1899

ANDREW, DAVID, Jun., 116 Hope street, Glasgow, 19 Dec., 1905

ANDREWS, H. W., 128 Hope street, Glasgow, {A. 21 Dec., 1897 M. 24 Oct., 1899

ANDREWS, JAMES, Kelvin Engineering works, Kirkintilloch, 22 Nov., 1898

ANGUS, ROBERT, Lugar, Old Cumnock, Ayrshire, 28 Nov., 1860

ANIS, MOHAMED, Pasha, Chief of the Technical Department, P.W.D., Cairo, Egypt, 24 Apr., 1894

APPLEBY, JOHN R., 133 Balshagray avenue, Partick, 21 Feb., 1905

ARCHER, W. DAVID, 47 Croham road, Croyden, Surrey, 20 Dec., 1887

ARNOT, DAVID, Messrs Wilson, Sons & Co., Ltd., Rio de Janeiro, 19 Feb., 1907

ARNOT, WILLIAM, c/o Mrs Odam, 91 Hyndland street, Partick, 26 Apr., 1904

ARROL, THOMAS, 32 Falkland mansions, Hyndland, Glasgow, 27 Oct., 1903

ARROL, THOMAS, Oswald gardens, Scotstounhill, Glasgow, 20 Nov., 1894

†ARROL, Sir WILLIAM, LL.D., Dalmarnock Iron works, Glasgow, 27 Jan., 1885

ARROL, WILLIAM, 47 Kelvinside gardens, Glasgow, 27 Oct., 1903

ATCHLEY, CHARLES ATHERTON, 50 Wellington street, Glasgow, A.M. 24 Jan., 1905; M. 20 Mar., 1906

AULD, JOHN, Whitevale foundry, Glasgow, 28 Apr., 1885

AULD, JOHN, Pollok buildings, Cockerhill, Glasgow, 21 Mar., 1905

AUSTIN, WILLIAM R., 61 Brisbane Street, Greenock, 23 Feb., 1897

BAGSHAWE, BENJAMIN WYATT, 50 Wellington street, Glasgow, 20 Feb., 1906

BAILLIE, ROBERT, c/o Stirling Boiler Company, Limited, Motherwell, 20 Nov., 1900

BAIN, WILLIAM N., 40 St. Enoch square, Glasgow, 24 Feb., 1880

BAIN, WILLIAM P. C., Lochrin Iron works, Coatbridge, 28 Apr., 1891

BAIRD, ALLAN W., Romiley, Erskine avenue, Dumbreck, Glasgow, 25 Oct., 1881

BAIRD, JAMES OSWALD, Aitken street, Dalry, Ayrshire, 22 Jan., 1907

BALDERSTON, JAMES, Gateside, Paisley, 25 Jan., 1898

BALDERSTON, JOHN A., Vulcan Works, Paisley, 18 Dec., 1900

BALFOUR, GEORGE, Messrs J. G. White & Co., Ltd., 9 Cloak lane, London, E.C., 21 Mar., 1899

BALLANTINE, THOMAS, Messrs A. Stephen & Son, Linthouse, Glasgow, 24 Jan., 1905

BALLANTYNE, JOHN HUTCHISON, 116 Pollok street, Glasgow, 25 Oct., 1904

BAMFORD, HARRY, M.Sc., The University, Glasgow, 24 Nov., 1896

BARMAN, HARRY D. D., 21 University gardens, Glasgow, G. 24 Apr., 1888; M. 24 Oct., 1899

BARNETT, J. R., Westfield, Crookston, 22 Dec., 1896

BARNETT, MICHAEL R., 124 St. Vincent street, Glasgow, 22 Nov., 1887

BARR, Professor ARCHIBALD, D.Sc., Royston, Dowanhill, Glasgow, 21 Mar., 1882

BARR, JAMES, 67 Durward avenue, Shawlands, Glasgow, 20 Dec., 1904

BARR, JOHN, Glenfield Company, Kilmarnock, A. 28 Oct., 1883; M. 25 Jan., 1898

BARROW, JOSEPH, Messrs Thomas Shanks & Co., Johnstone, 19 Feb., 1901

BAXTER, GEORGE H., Clyde Navigation works, Dalmuir, 22 Mar., 1881

BAXTER, P. M'L., Copland works, Govan, G. 22 Dec., 1885; M. 15 June, 1898

BEALE, SAMUEL R., The Crown Iron works, North Woodside road, Glasgow, 20 Mar., 1906

BEARDMORE, JOSEPH GEORGE, Parkhead forge, Glasgow, 22 Nov., 1898

BEARDMORE, WILLIAM, Parkhead forge, Glasgow, 27 Oct., 1896

*†BELL, DAVID, 19 Eton place, Hillhead, Glasgow,

BELL, JOHN HART, Shawhill, Annan, N.B., 23 Jan., 1906

BELL, STUART, 163 Hope street, Glasgow, 26 Feb., 1895

BELL, THOMAS, Messrs John Brown & Co., Ltd., Clydebank, G. 26 Apr., 1887; M. 27 Apr., 1897

BELL, W. REID, P.O. Box 2263, Johannesburg, 22 Jan., 1889

BELSEY, WALTER JAMES, 91 Wellington street, Glasgow, 24 Oct., 1905

BENEDETTI, VITTORIO DE, Galleria Umberto, 1°, 27, Naples, 18 Dec., 1906

BENNIE, H. OSBOURNE, Clyde Engine works, Cardonald, Glasgow, 25 Jan., 1898

BERGIUS, W. C., 8 Marlborough terrace, Glasgow, W., 23 Jan., 1900

BERGIUS, WALTER M'DONALD, 169 Finnieston street, Glasgow, 23 Oct., 1906

BEVERIDGE, RICHARD JAMES, 97 Scottish Provident buildings, Belfast, 22 Feb., 1898

BIGGART, ANDREW S., Inchgarvie, 39 Sherbrooke avenue, Pollokshields, Glasgow, G. 20 Mar., 1883; M. 25 Nov., 1884

BILES, Professor JOHN HARVARD, LL.D., The University, Glasgow, 25 Mar., 1884

BINNIE, R. B. JARDINE, Carntyne Works, Parkhead, 24 Dec., 1901

BISHOP, ALEXANDER, 3 Germiston street, Glasgow, G. 24 Mar., 1885; M. 24 Jan., 1899

BLACK, JOHN W., 108a West Regent street, Glasgow, G. 25 Oct., 1892; M. 27 Oct., 1903

BLAIR, ARCHIBALD, 39 Partickhill road, Glasgow, G. 27 Oct., 1885; M. 27 Oct., 1903

BLAIR, DAVID A., Scotland street Copper works, Glasgow 23 Mar., 1897

BLAIR, FRANK R., Ashbank, Maryfield, Dundee, G. 22 Mar., 1892; M. 21 Apr., 1903

BLAIR, GEORGE, Jun., 38 Queen street, Glasgow, G. 22 Jan., 1884; M. 23 Feb., 1897

BOAK, WILLIAM, Messrs Delmege, Forsyth & Co., Colombo, Ceylon, 24 Oct., 1905

BONE, WILLIAM L., Ant and Bee works, West Gorton, Manchester, 23 Oct., 1883

BOOTH, ROBERT, Glengelder, Cowey road, Durban, Natal, 26 Jan., 1904

BOST, W. D. ASHTON, Adelphi house, Paisley, 25 Jan., 1898

BOW, WILLIAM, Thistle works, Paisley, 27 Jan., 1891

BOWMAN, WILLIAM DAVID, 21 Kersland terrace, Hillhead, Glasgow, G. 22 Dec., 1891 M. 24 Nov., 1903

BOWSER, CHARLES HOWARD, Charles street, St. Rollox, Glasgow, 21 Mar., 1899

BOYD, JOHN WHITE, 7 Royal Bank place, Glasgow, 24 Jan., 1905

BRACE, GEORGE R., 26 African house, Water street, Liverpool, 25 Mar., 1890

BRAND, MARK, B.Sc., Glenshirva, Twechar, Kilsyth, G. 24 Jan., 1888 M. 21 Apr., 1903

BREINGAN, W. D., Barns place, Clydebank, 22 Jan., 1901

BREWER, J. ALFRED, 58 St Vincent street, Glasgow, 20 Nov., 1900

BRIER, HENRY, 1 Miskin road, Dartford, Kent, 22 Dec., 1891

BROADFOOT, JAMES, Lymehurst, Jordanhill, Glasgow, G. 23 Dec., 1873 M. 22 Jan., 1884

BROADFOOT, WILLIAM R., Inchholm works, Whiteinch, Glasgow, 25 Jan., 1898

BROCK, WALTER, Jun., Levenford, Dumbarton, 27 Oct., 1896

BROEKMAN, LOUIS, Standard Buildings, City square, Leeds, 22 Nov., 1904

BROOKFIELD, JOHN WAITES, Halifax Graving Dock Co., Halifax, Nova Scotia, S. 18 Feb., 1902 M. 20 Dec., 1904

BROOM, THOMAS M., 11 Union street, Greenock, 25 Apr., 1893

BROWN, ALEXANDER D., Dry Dock, St. John's, Newfoundland, 22 Dec., 1896

BROWN, ALEXANDER T., 18 Glencairn drive, Pollokshields, Glasgow, G. 25 Feb., 1879 M. 27 Oct., 1891

BROWN, ANDREW M'N., Strathclyde, Dalkeith avenue, Dumbreck, Glasgow, G. 25 Jan., 1876 M. 24 Nov., 1885

BROWN, DANIEL GEORGE, 11 Sutherland street, Hillhead, Glasgow, 19 Feb., 1907

†BROWN, DAVID A., 41 Rosslyn crescent, Edinburgh, G. 23 Feb., 1897 M. 27 Oct., 1903

BROWN, EBENEZER HALL, Helen street Engine works, Govan, G. 18 Dec., 1883 M. 26 Feb., 1895

BROWN, GEORGE, Garvel Graving Dock, Greenock, 23 Mar., 1886

BROWN, JAMES, c/o Messrs. Scott & Co., Greenock, G. 26 Oct., 1886 M. 26 Jan., 1892

BROWN, JAMES M'N., 15 Falkland Mansions, Hyndland, Glasgow, 26 Jan., 1897

BROWN, J. POLLOCK, 1 Broomhill avenue, Partick, Glasgow, G. 18 Dec., 1894 M. 22 Dec., 1903

BROWN, MATTHEW T., B.Sc., 6 Bisham gardens, Highgate, London, N., G. 25 Jan., 1881 M. 18 Dec., 1894

BROWN, ROBERT, 7 Church road, Ibrox, Glasgow, 18 Feb., 1902

BROWN, WALTER, Monkdyke, Renfrew, 28 Apr., 1885

BROWN, WILLIAM, Kilrene, 7 Whittingehame gardens, Glasgow, W., G. 27 Jan., 1874; M. 22 Jan., 1884

BROWN, WILLIAM, Albion works, Woodville street, Govan, 21 Dec., 1880

BROWN, WILLIAM, North British Locomotive Co., Ltd., Queen's Park works, Polmadie, Glasgow, 17 Dec., 1889

BRUCE, CHARLES ROSS, 37 Newton street, Greenock, 20 Dec., 1904

BRUHN, JOHANNES, D.Sc., 55 Overhill road, E. Dulwich, London, S.E., G. 24 Oct., 1893; M. 22 Feb., 1898

BRYAN, MATTHEW REID, 1 Royal terrace, Springburn, Glasgow, 24 Nov., 1903

BRYCE, JOHN SNODGRASS, 11 Hunter street, Paisley, 22 Jan., 1907

BUCHANAN, JOHN H., 5 Oswald street, Glasgow, 23 Jan., 1900

BUCKWELL, GEORGE W., Board of Trade Surveyors' Office, Barrow-in-Furness, 27 Apr., 1897

BUDD, EDWARD R., Messrs G. & A. Harvey, Ltd., Albion works, Govan, 20 Dec., 1904

BUDENBERG, CHRISTIAN FREDERICK, 31 Whitworth street, Manchester, 20 Dec., 1898

BURDEN, ALFRED GEORGE NEWKEY, Messrs J. W. Smyth & Co., Aegis buildings, Johannesburg, South Africa, 20 Feb., 1900

BURDON, WILLIAM MURRAY, Oakbank cottage, Bellshill, 19 Feb., 1907

BURNS, WILLIAM J. L., Bankok Dock Co., Bankok, Siam, A.M. 26 Jan., 1904; A. 25 Oct., 1904

BURNSIDE, WILLIAM, Messrs M'Bride, M'Grouther & Co., 149 West George street, Glasgow, 27 Oct., 1903

BURT, PETER, Hollybank, Bothwell, 20 Mar., 1906

BURT, THOMAS, 1 Royal terrace, Glasgow, 22 Mar., 1881

BUTTERS, JAMES THOMAS, Percy Crane & Engine Works, Glasgow, 19 Mar., 1901

CAIRD, ARTHUR, Messrs Caird & Co., Ltd., Greenock, 27 Oct., 1896

†CAIRD, EDWARD B., 777 Commercial road, Limehouse, London, 29 Oct., 1878

†CAIRD, PATRICK T., Messrs Caird & Co., Ltd., Greenock, 27 Oct., 1896

CAIRD, ROBERT, LL.D., Messrs Caird & Co., Ltd., Greenock, 20 Feb., 1894

CALDER, JOHN, 8 Prospect avenue, Ilion, New York, U.S.A., G. 24 Feb., 1891; M. 27 Oct., 1903

CALDERWOOD, WILLIAM T., Stanley villa, Cathcart, Glasgow, 25 Jan., 1898

CALDWELL, JAMES, 130 Elliot street, Glasgow, 17 Dec., 1878

CALDWELL, JAMES, 157 West George street, Glasgow, A.M. 20 Oct., 1905; M. 20 Oct., 1907

CAMERON, ANGUS, Union Steamship Co. of New Zealand, Dunedin, N Z., 18 Feb., 1902

CAMERON, HUGH, 40 Camperdown road, Scotstoun, Glasgow, G. 25 Oct., 1892 M. 27 Oct., 1903

CAMPBELL, ANGUS, 116 Bryn road, Sketty, Swansea, G. 24 Jan., 1888 M. 27 Oct., 1903

CAMPBELL, DUNCAN, Carntyne foundry and engineering works, Parkhead, Glasgow, 23 Jan., 1900

CAMPBELL, HUGH, The Campbell Gas Engine Company, Halifax, Yorkshire, 18 Dec., 1900

CAMPBELL, JAMES, 104 Bath street, Glasgow, 18 Dec., 1900

†CAMPBELL, THOMAS, Maryhill Iron works, Glasgow, 20 Nov., 1900

CAREY, EVELYN G., 4 Sunnyside avenue, Uddingston, 22 Oct., 1889

CARLAW, ALEX. L., 11 Finnieston street, Glasgow, 24 Dec., 1895

CARLAW, DAVID, Jun., 11 Finnieston street, Glasgow, 24 Dec., 1895

CARLAW, JAMES W., 11 Finnieston street, Glasgow, 24 Dec., 1895

CARMICHAEL, ANGUS T., The Yokohama Dock Co., Ltd., Yokohama, Japan, 19 Mar., 1901

CARRUTHERS, JOHN H., Ashton, Queen Mary avenue, Crosshill, Glasgow, 22 Nov., 1881

CARSLAW, WILLIAM H., Jun., Parkhead boiler works, Parkhead, Glasgow, G. 23 Dec., 1890 M. 27 Oct., 1903

CARVER, THOMAS, A. B., D.Sc., 118 Napiershall street, Glasgow, 19 Feb., 1901

CHALMERS, WALTER, Ethel cottage, Bishopriggs, Glasgow, 23 Jan., 1900

CHAMEN, W. A., 23 Victoria square, Penarth, Cardiff, 22 Feb., 1898

CHISHOLM ROBERT, 1 Albany quadrant, Springboig, Shettleston, 29 Oct., 1901

CHRISTIE, JOHN, Corporation Electricity Works, Brighton, 22 Nov., 1898

CHRISTIE, R. BARCLAY, Messrs M'Lay & M'Intyre, 21 Bothwell street, Glasgow, 25 Apr., 1893

CHRISTISON, GEORGE, 13 Cambridge drive, Glasgow, 22 Feb., 1898

CLARK, JOHN, British India Steam Navigation Co., 9 Throgmorton avenue, London, E.C., 23 Jan., 1883

CLARK, WILLIAM, 208 St. Vincent street, Glasgow, 25 Apr., 1893

CLARK, WILLIAM, Companhia Carris de Ferro de Lisbon, Lisbon, Portugal, 22 Dec., 1896

CLARK, WILLIAM, 23 Royal Exchange square, Glasgow, 26 Jan., 1904

CLARKSON, CHARLES, Falkirk Iron works, Falkirk, 27 Oct., 1891

CLEGHORN, ALEXANDER, 14 Hatfield drive, Kelvinside, Glasgow, 22 Nov., 1892

CLELAND, W. A., Yloilo, Philippine Islands, G. 25 Apr., 1893 M. 25 Nov., 1902

CLYNE, JAMES, Messrs Clyne, Mitchell, & Co., Commercial road, Aberdeen, 18 Dec., 1900

COATS, ALLAN, Jun., B.Sc., 15 Bank street, Alexandria, 23 Oct., 1900

†COBB, FRANCIS HILLS, Public Works Department, Port Sudan, Red Sea, 24 Jan., 1905

COCHRAN, JAMES T., 24 Chapel street, Liverpool, 26 Feb., 1884

COCHRANE, JOHN, Grahamston foundry, Barrhead, 25 Mar., 1890

COCKBURN, ROBERT, Cumbrae House, Dumbreck, Glasgow, 25 Jan., 1898

COLVILLE, ARCHIBALD, 51 Clifford street, Bellahouston, Govan, 23 Jan., 1900

COLVILLE, ARCHIBALD, Motherwell, 27 Oct., 1896

†COLVILLE, DAVID, Jerviston house, Motherwell, 27 Oct., 1896

CONNELL, CHARLES, Whiteinch, Glasgow, G. 19 Dec., 1876 M. 25 Mar., 1884

CONNER, ALEXANDER, 6 Grange Knowe, Irvine road, Kilmarnock, G. 26 Feb., 1884 M. 24 Jan., 1899

CONNER, BENJAMIN, 196 St. Vincent street, Glasgow, G. 22 Dec., 1885 M. 26 Oct., 1897

CONNER, JAMES, English Electric Works, Preston, 20 Nov., 1900

CONSTANTINE, EZEKIEL GRAYSON, The Stirling Boiler Co., Ltd., Motherwell, 26 Apr., 1904

COOPER, ARTHUR WILLIAM, 2 Westfield place, Broughty Ferry, 18 Dec., 1906

COPESTAKE, S. G. G., 40 Queen Mary avenue, Glasgow, S., 11 Mar., 1868

CORMACK, JAMES, 13 Darnley avenue, Scotstoun, Glasgow, 18 Dec., 1906

CORMACK, Prof. JOHN DEWAR, B.Sc., University College, Gower street, London, W.C., 24 Nov., 1896

COSTIGANE, A. PATON, Longcroft, Thorntonhall, Lanarkshire, 20 Jan., 1903

COULSON, W. ARTHUR, 47 King street, Mile-end, Glasgow, 15 June, 1898

COUPER, SINCLAIR, Moore Park boiler works, Govan, G. 21 Dec., 1880 M. 27 Oct., 1891

COUSINS, JOHN BOOTH, 75 Buchanan street, Glasgow, 22 Mar., 1904

COUTTS, FRANCIS, 280 Great Western road, Aberdeen, G. 27 Oct., 1885 M. 24 Jan., 1899

COWAN, DAVID, Coulport house, Loch Long, Dumbartonshire, 24 Apr., 1900

COWAN, JOHN, 8 Wilton mansions, Kelvinside N., Glasgow, 27 Apr., 1897

COWAN, JOHN, Clydebridge Steel Co., Ltd., Cambuslang, 16 Dec., 1902

†COWIE, WILLIAM, 51 Endsleigh gardens, Ilford, Essex, 20 Feb., 1900

CRAIG, ALEXANDER, 124 St. Vincent street, Glasgow, G. 26 Nov., 1895 M. 16 Dec., 1902

CRAIG, ARCHIBALD FULTON, Belmont, Paisley, 25 Jan., 1898

CRAIG, JAMES, Lloyd's Registry, 14 Cross-shore street, Greenock, G. 20 Dec., 1892 M. 21 Dec., 1897

CRAIG, JOHN, 32 Cartside quadrant, Langside, Glasgow, 22 Jan., 1900

CRAN, JOHN, Albert Engine works, Leith, 21 Jan., 1902

CRAWFORD, JAMES, 30 Ardgowan street, Greenock, 27 Oct., 1896

CRAWFORD, ROBERT, 17 Bellevue crescent, Ayr, 23 Apr., 1907

CRIGHTON, JAMES, Rotterdamsche Droogdok, Maatschapij, Rotterdam, Holland, G. 23 Nov., 1897; M. 20 Jan., 1903

CRIGHTON, JOHN, 14 Cawley road, Hackney, London, N.E. G. 26 Nov., 1901; A.M. 20 Jan., 1903; M. 22 Dec., 1903

CROCKATT, WILLIAM, 179 Nithsdale road, Pollokshields, Glasgow, 22 Mar., 1881

CROSHER, WILLIAM, 74 York street, Glasgow, 24 Jan., 1899

CROW, JOHN, Trynlaw, Merrylee road, Newlands, Glasgow, 25 Jan., 1898

CUNNINGHAM, PETER N., Northcote, Uddingston, West, 23 Dec., 1884

CUNNINGHAM, P. NISBET, Jun., Northcote, Uddingston, West, G. 22 Nov., 1898; M. 3 May, 1904

CUTHILL, WILLIAM, Beechwood, Uddingston, 24 Nov., 1896

DARROCH, JOHN, 93 Millbrae road, Langside, Glasgow, 24 Jan., 1899

DAVIDSON, DAVID, 17 Regent Park square, Strathbungo, Glasgow, G. 22 Mar., 1881; M. 18 Dec., 1888

DAVIE, JAMES, Johnstone Engine works, High street, Johnstone, 19 Dec., 1899

DAVIE, WILLIAM, 50 Lennox avenue, Scotstoun, Glasgow, 22 Dec., 1903

DAVIS, CHARLES H., 25 Broad street, New York, U.S.A., 20 Nov., 1900

DAVIS, HARRY LLEWELYN, Messrs Cochran & Co., Ltd., Newbie, Annan, G. 18 Dec., 1888; M. 23 April, 1901

DAWSON, ALEXANDER, Elgin works, Clydebank, 22 Jan., 1907

DAY, CHARLES, Huntly lodge, Ibroxholm, Glasgow, 24 Nov., 1903

DE KRETSER, HORACE EGERTON, P.W.D. Bungalow, Anuradhapura, Ceylon, 19 Mar., 1907

DELACOUR, FRANK PHILIP, Baku, Russia, 24 Apr., 1900

DEMPSTER, JAMES, 7 Knowe terrace, Pollokshields, Glasgow, 24 Jan., 1899

DENHOLM, JAMES, 3 Westminster crescent, Crow road, Partick, 21 Nov., 1883

DENHOLM, WILLIAM, Meadowside Shipbuilding yard, Partick, Glasgow, G. 18 Dec., 1883; M. 21 Nov., 1893

DENNY, ARCHIBALD, Cardross park, Cardross, 21 Feb., 1888

DENNY, JAMES, Engine works, Dumbarton, 25 Oct., 1887

DENNY, Col. JOHN M., Heleneslee, Dumbarton, 27 Oct., 1898

DENNY, LESLIE, Leven Shipyard, Dumbarton, 30 Apr., 1895

DENNY, PETER, Crosslet, Dumbarton, 21 Feb., 1888

†DEWRANCE, JOHN, 165 Great Dover street, London, S.E., 19 Feb., 1901

DICK, FRANK W., c/o The Parkgate Steel & Iron Co., Ltd., Parkgate works, Rotherham. 19 Mar., 1878

DICKIE, DAVID W., 428 Mississippi street, San Francisco, California, U.S.A., S. 22 Mar., 1904 M. 24 Oct., 1905

DIMMOCK, JOHN WINGRAVE, Lloyd's Register of Shipping, 342 Argyle street, Glasgow, 22 Mar., 1898

DIXON, JAMES S., LL.D., 127 St. Vincent street, Glasgow, G. 24 Dec., 1887 M. 22 Jan., 1897

DIXON, WALTER, Derwent, Kelvinside gardens, Glasgow, 26 Feb., 1895

DOBBIE, JOHN GOURLAY, 203 West George street, Glasgow, 19 Dec., 1905

DOBSON, JAMES, Messrs H. Pooley & Son, Albion Foundry, Kidsgrove, Staffordshire G. 22 Dec., 1896 M. 25 Oct., 1904

DODD, T. J., Lloyd's Register of Shipping, 342 Argyle street, Glasgow, 20 Nov., 1900

D'OLIVEIRA, RAPHAEL CHRYSOSTOME, Campos, Rio de Janeiro, Brazil, 20 Feb., 1900

DONALD, B. B., Low Balernock, Petershill, Glasgow, G. 20 Mar., 1888 M. 24 Jan., 1899

DONALD, DAVID P., Johnstone, 21 Mar., 1899

DONALD, ROBERT HANNA, Abbey works, Paisley, 22 Nov., 1892

DONALDSON, A. FALCONER, Beechwood, Partick, G. 27 Oct., 1896 M. 16 Dec., 1902

DONALDSON, JAMES, Almond villa, Renfrew, 25 Jan., 1876

†DOUGLAS, CHARLES STUART, B.Sc., St. Brides, 12 Dalziel drive, Pollokshields, Glasgow, G. 24 Jan., 1899 M. 8 Mar., 1903

DOWNIE, A. MARSHALL, B.Sc., London road Iron works, Glasgow, 21 Nov., 1899

DREW, ALEXANDER, 154-6 Temple Chambers, Temple avenue, London, E.C., 29 Apr., 1890

DRON, ALEXANDER, 59 Elliot street, Glasgow, 27 Oct., 1903

DRUMMOND, WILLIAM, 44 Polworth gardens, Hyndland, Glasgow, 1 May, 1906

DRYSDALE, JOHN W. W., 3 Whittingehame gardens, Kelvinside, Glasgow, 23 Dec., 1884

DUNCAN, ALEXANDER, 20 Norse road, Scotstoun, Glasgow, 18 Dec., 1906

DUNCAN, GEORGE F., 12 Syriam terrace, Broomfield road, Springburn, Glasgow, G. 23 Nov., 1886 M. 20 Mar., 1894

DUNCAN, GEORGE THOMAS, Cumledge, Uddingston, 15 Apr., 1902

DUNCAN, HUGH, 11 Hampden terrace, Mount Florida, Glasgow, 15 June, 1898

DUNCAN, JOHN, Ardencluthe, Port-Glasgow, 23 Nov., 1886

DUNCAN, ROBERT, M.P., Whitefield Engine works, Govan, 25 Jan., 1881

DUNCAN, W. LEES, Partick foundry, Partick, 18 Dec., 1900

DUNDAS, DAVID, Messrs A. Watson & Co., 36 George street, Glasgow, 21 Nov., 1905

DUNKERTON, ERNEST CHARLES, 97 Holly avenue, Newcastle-on-Tyne, 17 Feb., 1903

DUNLOP, ALEXANDER, 14 Derby terrace, Sandyford, Glasgow, G. 21 Dec., 1897; A.M. 28 Apr., 1903; M. 18 Dec., 1906

DUNLOP, DAVID JOHN, Inch works, Port-Glasgow, 23 Nov., 1869

DUNLOP, JOHN G., Clydebank, Dumbartonshire, 23 Jan., 1877

DUNLOP, JOHN MITCHELL, Consulting Engineer, Bangkok, Siam, 20 Mar., 1906

DUNLOP, THOMAS, 25 Wellington street, Glasgow, 19 Dec., 1899

DUNLOP, WILLIAM A., Harbour Office, Belfast, 23 April, 1901

DUNN, JAMES, Collalis, Scotstounhill, Glasgow, 23 April, 1901

DUNN, J. R., 42 Magdalen Yard road, Dundee, 16 Dec., 1902

†DUNN, PETER L., 815 Battery street, San Francisco, U.S.A., 26 Oct., 1886

†DUNSMUIR, HUGH, Govan Engine works, Govan, 21 Apr., 1903

DYER, HENRY, M.A., D.Sc., 8 Highburgh terrace, Dowanhill, Glasgow, 23 Oct., 1883

EDWARDS, CHARLES, Messrs Scotts Shipbuilding & Engineering Co., Ltd., Greenock, 26 Oct., 1897

ELGAR, FRANCIS, LL.D., F.R.SS., L.& E., 34 Leadenhall street, London, E.C., 24 Feb., 1885

ELLIOTT, ROBERT, B.Sc., Lloyd's Surveyor, Greenock, G. 24 Mar., 1885; M. 21 Feb., 1898

EWEN, PETER, Craigielea, Bothwell, 21 Mar., 1899

EWING, GEORGE HAWKSBY, Messrs Ewing & Lawson, Ltd., Crown Point Boiler works, Glasgow, 24 Oct., 1905

FAICKNEY, ROBERT, 3 Thornwood terrace, Partick, 20 Nov., 1900

FAIRWEATHER, WALLACE, 62 St. Vincent st., Glasgow, 24 Apr., 1894

FARNELL, ALFRED HENRY, Moorfield, Lenzie, 24 Oct., 1905

FARNHAM, REGINALD V., Experimental works, Skelmorlie, 20 Nov., 1906

FERGUSON, DAVID, Glenholm, Port-Glasgow, 29 Oct., 1901

FERGUSON, JOHN, 160 Hope street, Glasgow, 21 Nov., 1905

FERGUSON, JOHN JAMES, Ard-Mhor, Kirn, 24 Jan., 1899

FERGUSON, LOUIS, Newark Works, Port-Glasgow, G. 22 Jan., 1895; M. 26 Nov., 1901

FERGUSON, PETER, Rossbank, Port-Glasgow, 22 Oct., 1889

FERGUSON, PETER J., Carlogie, Greenock, W., {G. 22 Jan., 1895 / M. 26 Nov., 1901}

FERGUSON, WILFRED H., 4 Thornwood terrace, Partick, 22 Nov., 1898

FERGUSON, WILLIAM D., 3 Mount Delphi, Antrim road, Belfast, {G. 27 Jan., 1885 / M. 20 Mar., 1894}

FERGUSON, WILLIAM R., Messrs Barclay, Curle & Co., Ltd., Whiteinch, Glasgow, {G. 22 Feb., 1881 / M. 22 Jan., 1895}

FERRIER, HUGH, Messrs Rankin & Blackmore, Greenock, 22 Dec., 1903

FIFE, WILLIAM, Messrs William Fife & Sons, Fairlie, Ayrshire, 28 Apr., 1903

FINDLAY, ALEXANDER, M.P., Parkneuk Iron works, Motherwell, 27 Jan., 1880

FINDLAY, LOUIS, 50 Wellington street, Glasgow, {G. 21 Feb., 1893 / M. 27 Oct., 1903}

FINLAYSON, FINLAY, Atlas works, Airdrie, 23 Dec., 1884

FINNIE, WILLIAM, Messrs Howarth Erskine, Limited, Singapore, Straits Settlements, 20 Dec., 1904

FISHBOURNE, J., Blagotaischinsh on Amur, E. Siberia, 23 Oct., 1906

FISHER, ANDREW, St. Mirren's Engine works, Paisley, 25 Jan., 1898

FLEMING, GEORGE E., Messrs Dewrance & Co., 79 West Regent street, Glasgow, 27 Oct., 1896

FLEMING, JOHN, Dellburn works, Motherwell, 24 Jan., 1899

†FLETCHER, ANDREW, Hoboken, New Jersey, U.S.A., 23 Jan., 1906

FLETT, GEORGE L., 5 Walmer crescent, Ibrox, Glasgow, 22 Jan., 1895

FORSYTH, LAWSON, 97 St. James road, Glasgow, 18 Dec., 1883

FRAME, JAMES, Ravenslie, Castle road, Cathcart, Glasgow, 23 Feb., 1897

FRASER, J. IMBRIE, Clifton, Row, Dumbartonshire, {G. 27 Apr., 1886 / M. 27 Oct., 1903}

FUJII, TERUGORO, Eng.-Capt., Imperial Japanese Navy, Parliament Chambers, Great Smith street, Victoria street, Westminster, London, S.W., 21 Feb., 1899

FULLERTON, ALEXANDER, Vulcan Works, Paisley, 22 Dec., 1896

FULLERTON, JAMES, Abbotsburn, Paisley, 19 Mar., 1901

FULLERTON, ROBERT A., 1 Strathmore gardens, Hillhead, Glasgow, 19 Mar., 1901

FULTON, NORMAN O., Ballageich, South Brae drive, Scotstounhill, Glasgow, {G. 23 Feb., 1892 / M. 19 Mar., 1901}

FYFE, CHARLES F. A., c/o W. Beckett, Esq., No. 1 Branch, South Side, Queen's Dock, Liverpool, {G. 18 Dec., 1894 / M. 28 Apr., 1903}

GALE, WILLIAM M., 18 Huntly gardens, Kelvinside, Glasgow, 24 Jan., 1893

GALLETLY, ARCHIBALD A., 10 Greenlaw avenue, Paisley, 22 Jan., 1901

GALLOWAY, ANDREW, Newport street, Westport, {G. 24 Oct., 1893 / M. 25 Oct., 1904}

GALLOWAY, CHARLES S., Greenwood City, Vancouver, B.C., 22 Jan., 1895

GARDNER, WALTER, Craigview, Thistle park, Cardonald, Glasgow, 20 Dec., 1898

GARNETT, SYDNEY HAROLD, 144 St. Vincent street, Glasgow, 21 Feb., 1905

GEMMELL, E. W., 73 Robertson street, Glasgow, 18 Dec., 1888

GEMMELL, THOMAS, Electric Lighting Department, St. Enoch Station, Glasgow, 24 Oct., 1899

GIBB, ANDREW, Garthland, Westcombe Park road, Blackheath, London, S.E., G. 23 Dec., 1873 M. 21 Mar., 1882

GIFFORD, PATERSON, c/o Messrs Bell, Brothers & M'Lelland, 135 Buchanan street, Glasgow, 23 Nov., 1886

GILCHRIST, ARCHIBALD, 36 Finnieston street, Glasgow, 16 Dec., 1902

GILCHRIST, JAMES, 3 Kingsborough gardens, Kelvinside, Glasgow, G. 26 Dec., 1866 M. 29 Oct., 1878

GILL, WILLIAM NELSON, 47 Kersland street, Hillhead, Glasgow, 23 Feb., 1904

GILLESPIE, ANDREW, 65 Bath street, Glasgow, 20 Nov., 1894

GILLESPIE, JAMES, 21 Minerva street, Glasgow, G. 24 Feb., 1874 M. 24 Mar., 1891

GILLESPIE, JAMES, Jun., Oakdene, Douglas street, Motherwell, 18 Dec., 1900

GILLIES, JAMES, 14 Walmer terrace, Glasgow, 21 Mar., 1905

GLASGOW, JAMES, Soho Engine works, Paisley, 25 Jan., 1898

†GOODWIN, GILBERT S., Alexandra buildings, 19 James street, Liverpool, 28 Mar., 1866

GORDON, A. G., c/o Messrs Shewan, Tomes, & Co., Hong kong, China, 23 April, 1901

GORDON, JOHN, 5 Bogton avenue, Cathcart, Glasgow, 26 Mar., 1895

GORRIE, JAMES M., 1 Broomhill terrace, Partick, Glasgow, 22 Nov., 1898

GOUDIE, ROBERT, 37 West Campbell street, Glasgow, 27 Oct., 1903

GOUDIE, WILLIAM J., B.Sc., University College, Gower street, London, W.C., G. 21 Dec., 1897 M. 29 Oct., 1901

GOURLAY, R. CLELAND, Glenfield, Paisley, G. 24 Dec., 1895 M. 27 Oct., 1903

GOW, GEORGE, Aroha, Bellevue road, Mount Eden, Auckland, New Zealand, 20 Mar., 1900

GOWAN, A. B., Byram, Maxwell drive, Pollokshields, Glasgow, G. 24 Jan., 1882 M. 22 Jan., 1895

GRACIE, ALEXANDER, Fairfield Shipbuilding and Engineering Company, Govan, G. 26 Feb., 1884 M. 24 Nov., 1896

GRAHAM, JOHN, 25 Broomhill terrace, Partick, 23 Oct., 1900

GRAHAM, JOHN, 15 Armadale street, Dennistoun, Glasgow, G. 19 Mar., 1901 M. 21 Apr., 1903

GRAHAM, WALTER, Kilblain Engine works, Nicholson street, Greenock, G. 28 Jan., 1896 M. 15 June, 1898

GRANT, THOMAS M., Beechwood, 17 Albert drive, Pollokshields, Glasgow, 25 Jan., 1876

GRAY, Prof. ANDREW, LL.D., F.R.S., The University, Glasgow, 24 Oct., 1905

GRAY, WILLIAM, Messrs Palmers Shipbuilding & Iron Co., Ltd., 60 Fenchurch street, London, E.C., 26 Jan., 1904

GRIFFITH, EDWIN, Engine works, Dumbarton, 23 Jan., 1906

GRIGG, JAMES, 135 Balshagray avenue, Partick, 20 Jan., 1903

GRIMLEY, WILLIAM, 177 Ledard road, Langside, Glasgow, 19 Feb., 1907

GROUNDWATER, CHARLES LAMONT, c/o Messrs Mackay, Macarthur Ltd., Bangkok, Siam, 21 Mar., 1905

GROVES, L. JOHN, Engineer, Crinan Canal house, Ardrishaig, 20 Dec., 1881

GUTHRIE, JOHN, The Crown Iron works, Glasgow, 27 Oct., 1896

HADDOW, W. W., Odah villa, Bent road, Hamilton, 23 Oct., 1906

HAIG, ROBERT, Dollarfield, Dollar, 22 Jan., 1901

HAIGH, WILLIAM R., 6 Elmwood gardens, Jordanhill, Glasgow, 22 Dec., 1896

HALKET, JAMES P., Glengall Iron works, Millwall, London, E., 26 Oct., 1897

HAMILTON, ARCHIBALD, Clyde Navigation Chambers, Glasgow, G. 24 Feb., 1874 M. 24 Nov., 1885

HAMILTON, CLAUD, 247 St. Vincent street, Glasgow, 15 June, 1898

HAMILTON, DAVID C., Clyde Shipping Company, 21 Carlton place, Glasgow, G. 23 Dec., 1873 M. 22 Nov., 1881

HAMILTON, JAMES, Ardedynn, Kelvinside, Glasgow, G. 26 Dec., 1863 M. 18 Mar., 1876

*†HAMILTON, JOHN, 22 Athole gardens, Glasgow,

HAMILTON, JOHN K., 230 Berkeley street, Glasgow, 15 May, 1900

HAMILTON, ROBERT SMITH, Flemington, Maxwell Park gardens, Pollokshields, Glasgow, 22 Mar., 1904

HARMAN, BRUCE, 35 Connaught road, Harlenden, London, N.W., G. 2 Nov., 1880 M. 22 Jan., 1884

HARRIS, WILLIAM, 73 Robertson street, Glasgow, 22 Nov., 1904

HARRISON, J. E., 160 Hope street, Glasgow, G. 26 Feb., 1889 M. 22 Feb., 1898

HART, P. CAMPBELL, 134 St., Vincent street, Glasgow, 24 Nov., 1896

HARTLEY, JOSEPH JABEZ, c/o Messrs Smith, Wincott & Co., 53 Waterloo street, Glasgow, 18 Dec., 1906

HARVEY, JAMES, 224 West street, Glasgow, 24 Jan., 1899

HARVEY, JOHN H., Messrs Wm. Hamilton & Co., Port-Glasgow, 22 Feb., 1887

HARVEY, THOMAS, Grangemouth Dockyard Co., Grangemouth, 19 Dec., 1899

HAY, JOHN, Wansfell, The Grove, Finchley, London, N., 26 Nov., 1901

HAY, RANKIN, 44 Windsor terrace, St. George's road, Glasgow, 18 Dec., 1900

HAYWARD, THOMAS ANDREW, 18 Carrington street, Glasgow, 22 Mar., 1898

†HENDERSON, A. P., 30 Lancefield quay, Glasgow, 25 Nov., 1879

HENDERSON, CHARLES A., 8 Lorne terrace, Maryhill, Glasgow, G. 24 Jan., 1899 M. 27 Oct., 1903

HENDERSON, FREDERICK N., Meadowside, Partick, Glasgow, 26 Mar., 1895

HENDERSON, H. E., Victoria avenue, Great Crosby, near Liverpool, G. 22 Nov., 1898 M. 3 May, 1904

HENDERSON, Prof. JAMES BLACKLOCK, D.Sc., Royal Naval College, Greenwich, 20 Nov., 1900

HENDERSON, JOHN FRANCIS, B.Sc., Albion Motor Car Co., Ltd., South street, Scotstoun, Glasgow, 16 Dec., 1902

HENDERSON, ROBERT, 777 London road, Glasgow, 19 Mar., 1901

HENDERSON, WILLIAM STEWART, 3 Westfield street, Crossmyloof, Glasgow, 24 Nov., 1896

HENDIN, ALEXANDER JAMES, 14 Hamilton terrace, W., Partick, Glasgow, 22 Dec., 1903

HENDRY, JAMES C., Rosebank, Gartsherrie road, Coatbridge, 18 Dec., 1900

HENRY, ERENTZ, 13 Ann street, Hillhead, Glasgow, 20 Feb., 1900

HERRIOT, W. SCOTT, Ravenswood, Partick, W., 28 Oct., 1890

HETHERINGTON, EDWARD P., Messrs John Hetherington & Co, Ltd., Pollard street, Manchester, 22 Nov., 1892

HIDE, WILLIAM SEYMOUR, Messrs Amos & Smith, Albert Dock works, Hull, 18 Dec., 1888

HILLHOUSE, PERCY ARCHIBALD, B.Sc., Whitworth, Busby, 3 May, 1904

HISLOP, GEORGE ROBERTSON, Jun., 13 St. James' place, Paisley, 18 Apr., 1905

HISLOP, ROBERT F., 13 St. James place, Paisley, 19 Feb., 1907

HOGARTH, W. A., 293 Onslow drive, Glasgow, 20 Nov., 1900

HOGG, CHARLES P., 14 Blythswood square, Glasgow, 2 Nov., 1880

HOGG, JOHN, Victoria Engine works, Airdrie, 20 Mar., 1883

HÖK, W., 10 Karlaplan, Stockholm, Sweden, 29 Oct., 1901

HOLLIS, H. E., 87 Union street, Glasgow, A. 20 Nov., 1897 M. 24 Oct., 1899

HOLMES, F. G., Town Hall, Govan, 23 Mar., 1880

HOMAN, WILLIAM M'L., P.O. Box 24, Bethlehem, Orange River Colony, G. 26 Jan., 1892 M. 26 Oct., 1897

HORNE, GEORGE S., Corozal, Iverton road, Johnstone, 21 Feb., 1899

HORNE, JOHN, Dysart House, St. Alban's road, Carlisle, 23 Nov., 1897

†HOUSTON, COLIN, Harbour Engine works, 60 Portman street, Glasgow, 25 Mar., 1890

HOUSTON, PERCIVAL T., Coronation house, 4 Lloyd's avenue, London, E.C., G. 22 Nov., 1898; M. 2 May 1905

HOWARD, JOHN ROWLAND, 56 Osborne road, Levenshulme, Manchester, 18 Dec., 1900

†HOWDEN, JAMES, 195 Scotland street, Glasgow, Original

HOWIE, WILLIAM, c/o Messrs. David Rollo & Son, 9 Blackstone street, Liverpool, G. 23 Apr., 1901; A.M. 28 Apr., 1903; M. 23 Oct., 1906

HUBBARD, ROBERT SOWTER, Messrs W. Beardmore & Co., Ltd., Dalmuir, 19 Dec., 1899

HUME, JAMES HOWDEN, 195 Scotland street, Glasgow, 22 Dec., 1891

HUNT, WILFRED, 121 West George street, Glasgow, 24 Jan., 1905

HUNTER, GILBERT M., Ferro Carril de Antofagasta á Bolivia, Antofagasta, Chile, G. 19 Oct., 1886; M. 26 Nov., 1889

HUNTER, JAMES, Aberdeen Iron works, Aberdeen, 25 Jan., 1881

HUNTER, JOHN, Bracklinn, Bearsden, A. 22 Jan., 1895; M. 21 Mar., 1899

HUNTER, JOSEPH GILBERT, P.O. Box 671, Newport News, Va., U.S.A., 24 Feb., 1891

HUNTER MATTHEW, Burnbank, Whiteinch, Glasgow, 19 Mar., 1901

†HUTCHEON, JAMES, Craigholme, South Brae drive, Scotstounhill, Glasgow, 19 Mar., 1901

HUTCHESON, ARCHIBALD, 37 Mair street, Plantation, Glasgow, 22 Dec., 1896

HUTCHESON, JOHN, 37 Mair street, Plantation, Glasgow, 22 Mar., 1898

HUTCHINSON, ARTHUR JAMES, Urban District Council Electricity works, Albert road, Farnworth, Bolton, 19 Feb., 1907

HUTCHISON, JAMES H., Shipbuilder, Port-Glasgow, 26 Mar., 1895

HUTCHISON, JOHN BLACK, 27 Finnart street, Greenock, 18 Dec., 1906

HUTCHISON, JOHN S., 107 Douglas street, Glasgow, 24 Apr., 1900

HUTCHISON, M., 50 Gibson street, Hillhead, Glasgow, 29 Oct., 1901

HUTSON, GUYBON, Culdees, Minard road, Partickhill, Glasgow, 21 Mar., 1893

HUTSON, JAMES, 117 Balshagray avenue, Partick, 19 Dec., 1899

HYND, ALEXANDER, Federal Supply and Cold Storage Co., of South Africa, Ltd., Durban, South Africa, 27 Oct., 1903

†INGLIS, JOHN, LL.D., Point house shipyard, Glasgow, 1 May, 1861

INGLIS, JOHN FRANCIS, 4 Princes terrace, Dowanhill, Glasgow, G. 26 Oct., 1897; M. 20 Jan., 1903

IRELAND, WILLIAM, 7 Ardgowan terrace, Glasgow, 25 Feb., 1890

ISDALE, MALCOLM GREIG, 1 Church road, Ibrox, Glasgow, 22 Jan., 1907

JACK, ALEXANDER, Cameron street, Motherwell, 21 Nov., 1893

JACK, JAMES R., Mavisbank, Dumbarton, 27 Apr., 1897

JACKSON, DANIEL, Rockville, Dumbarton, 24 Oct., 1899

†JACKSON, HAROLD D., Caxton street, Anniesland, Glasgow, G. 24 Mar., 1891; M. 20 Dec., 1898

JACKSON, WILLIAM, Govan Engine works, Govan, 21 Dec., 1875

JACKSON, WILLIAM STENHOUSE, 109 Hope street, Glasgow, G. 29 Oct., 1901; M. 23 Feb., 1904

JAMIESON, Professor ANDREW, F.R.S.E., 16 Rosslyn terrace, Kelvinside, Glasgow, 26 Mar., 1889

JEFF, WILLIAM, Northfleet Engineering works, Northfleet, Kent, 18 Dec., 1900

JEFFERY, ARTHUR W., 71 Dixon avenue, Glasgow, 23 April, 1901

JOHNSTON, DAVID, 9 Osborne terrace, Copland road, Glasgow, 25 Feb., 1879

JOHNSTON, ROBERT, Kirkles, Wallace street, Kilmarnock, 22 Mar., 1898

JOHNSTONE, GEORGE, F.R.S.E., 26 Conniston drive, Morningside, Edinburgh, 21 Mar., 1899

JONES, ARTHUR J. E., The Firs, Stoney lane, Moseley, Birmingham, 29 Oct., 1901

JONES, LLEWELLYN, Chesterfield House, 98 Gt. Tower street, London, E.C., 25 Oct., 1892

JUDD, EDWIN H., Sentinal works, Glasgow, G. 20 Dec., 1898; M. 26 Nov., 1901

KEAY, ROBERT DISHINGTON, Hazelbank, Thorn road, Bearsden, 19 Mar., 1907

KEEGAN, THOMAS J. M., c/o Charles Davis, Esq., Lawley buildings, Fox street, Johannesburg, 22 Jan., 1901

KEELING, THOMAS, 42 Prospecthill road, Langside, Glasgow, 19 Feb., 1901

KELLY, ALEXANDER, 100 Hyde Park street, Glasgow, 28 Feb., 1897

KELSO, MATTHEW GLEN, 1008 Pollokshields road, Glasgow, 27 Oct., 1903

KEMP, DANIEL, 62 Abbey drive, Jordanhill, Glasgow, G. 23 Nov., 1886; M. 20 Dec., 1898

KEMP, EBENEZER, D., Messrs Cammell, Laird & Co., Ltd., Birkenhead, G. 20 Feb., 1883; M. 25 Oct., 1892

KEMP, ROBERT G., 60 Abbey drive, Jordanhill, Glasgow, G. 28 Oct., 1890; M. 2 May, 1905

KEMPT, IRVINE, Jun., 37 Falkland mansions, Hyndland, Glasgow, G. 26 Feb., 1895; M. 27 Apr., 1897

KENNEDY, ALEXANDER M'A., Glenholm, Greenock, 30 Apr., 1895
KENNEDY, JOHN, Messrs R. M'Andrew & Co., Suffolk House, Laurence Pountney Hill, London, E.C., 23 Jan., 1877
KENNEDY, RANKIN, Bute villa, Springboig, Shettleston, 8 May, 1904
KENNEDY, ROBERT, B.Sc., Messrs Glenfield & Kennedy, Kilmarnock, 23 Mar., 1897
KENNEDY, THOMAS, Messrs Glenfield & Kennedy, Kilmarnock, 22 Feb., 1876
KENNEDY, WILLIAM, 13 Victoria crescent, Dowanhill, Glasgow, 24 Apr., 1894
KER, WILLIAM ARTHUR, 124 St. Vincent street, Glasgow, 16 Dec., 1902
KERR, JAMES, Lloyd's Register of Shipping, Hull, 22 Feb., 1898
KERR, JOHN, 74 Dombey street, Toxteth park, Liverpool, 23 Mar., 1904
KEY, WILLIAM, 109 Hope street, Glasgow, 20 Feb., 1901
KINCAID, JOHN G., 30 Forsyth street, Greenock, 22 Feb., 1898
KING, A. C., Motherwell Bridge works, Motherwell, 24 Jan., 1899
KING, J. FOSTER, The British Corporation, 121 St. Vincent street, Glasgow, 26 Mar., 1895
KINGHORN, A. J., 87 Union street, Glasgow, 24 Oct., 1899
KINGHORN, JOHN G., Colonial house, Water street, Liverpool, 23 Dec., 1879
KINLOCH, JAMES, 1320 Argyle street, Glasgow, 25 Oct., 1904
KINMONT, DAVID W., c/o Messrs H. Symington & Sons, Ocean Chambers, 190 West George street, Glasgow, G. 20 Feb., 1894 M. 19 Mar., 1901
†KIRBY, FRANK E., Detroit, U.S.A., 24 Nov., 1885
KLINKENBERG, JOHN, Dhualt, Lenzie, 16 Dec., 1902
KNIGHT, CHARLES A., c/o Messrs Babcock & Wilcox, Ltd., Oriel House, Farringdon st., London, E.C., 27 Jan., 1885
KNOX, ROBERT, 2 Duchal terrace, Kimalcolm, 24 Nov., 1896

LACKIE, WILLIAM W., 75 Waterloo street, Glasgow, 22 Nov., 1898
†LAGE, RENAUD, Ilha do Vianna, Rio de Janeiro, P.O. Box 1032, 18 Apr., 1905
LAIDLAW, D., 147 East Milton street, Glasgow, 18 Mar., 1902
LAIDLAW, JOHN, 98 Dundas street, s.s., Glasgow, 25 Mar., 1884
LAIDLAW, ROBERT, 147 East Milton street, Glasgow, 26 Nov., 1862
LAIDLAW, THOMAS, 52 Norse road, Scotstoun, Glasgow, 26 Nov., 1901
LAING, ANDREW, The Wallsend Slipway Company, Newcastle-on-Tyne, 20 Mar., 1880
LAIRD, ANDREW, 95 Bath street, Glasgow, 22 Nov., 1898
LAMBERT, JOHN, Corporation Electricity Works, Perth, 18 Dec., 1900
LAMBERTON, ANDREW, Sunnyside Engine works, Coatbridge, 27 Apr., 1897

LAMBIE, ALEXANDER, Ravenshall, Shankland road, Port-Glasgow, 19 Mar., 1901

LANG, C. R., Holm Foundry, Cathcart, Glasgow, G. 20 Nov., 1888; M. 26 Nov., 1895

†LANG, JAMES, Netherby, Johnstone, 20 Mar., 1906

LANG, JAMES, Messrs George Smith & Sons, 75 Bothwell street, Glasgow, 24 Feb., 1880

†LANG, JOHN, Lynnhurst, Johnstone, 26 Feb., 1884

†LANG, ROBERT, Quarrypark, Johnstone, 25 Jan., 1898

†LANG, WILLIAM B., Springfield, Johnstone, 20 Mar., 1906

LAURENCE, GEORGE B., Clutha Iron works, Paisley road, Glasgow, 21 Feb., 1888

LAW, DAVID, 8 Westbourne drive, Ibrox, Glasgow, 20 Dec., 1904

LAWSON, CHARLES BUCHANAN, Crown Point Boiler works, St. Marnock street, Glasgow, 20 Mar., 1906

LEASK, HENRY NORMAN, 4 Chapel Walks, Manchester, 17 Apr., 1906

LE CLAIR, LOUIS J., Societi, Anonyme Westinghouse, Sevran (Seine & Oise), France, G. 24 Nov., 1896; A.M. 21 Apr., 1903; M. 23 Oct., 1906

†LEE, ROBERT, 59 Brisbane street, Greenock, G. 21 Dec., 1888; M. 22 Mar., 1896

LEITCH, ARCHIBALD, Argyll Arcade, 30 Buchanan street, Glasgow, 22 Dec., 1896

LEMKES, C. R. L., 5 Wellington street, Glasgow, A. 26 Feb., 1888; M. 22 Mar., 1894

LENNOX, ALEXANDER, Government Marine Surveyor, Bangkok, Siam, G. 23 Jan., 1894; M. 19 Mar., 1901

LESLIE, JAMES T. G., 8 Glenavon terrace, Partick, 25 Apr., 1893

LESLIE, WILLIAM, Viewmount, Emerald Hill terrace, Perth, West Australia, 24 Feb., 1891

LEWIN, HARRY W., 154 West Regent street, Glasgow, 20 Dec., 1898

†LINDSAY, CHARLES C., 180 Hope street, Glasgow, G. 23 Dec., 1873; M. 24 Oct., 1876

LINDSAY, W. F., 203 Nithsdale road, Pollokshields, Glasgow, 19 Mar., 1901

LITHGOW, WILLIAM T., Port-Glasgow, 21 Feb., 1893

LIVESEY, ROBERT M., County Donegal Railways Joint Committee, Stranorlar, Co. Donegal, 26 Jan., 1897

LOADER JAMES F., 41 Urbiztondo, Manila, Philippine Islands, 23 Oct., 1906

†LOBNITZ, FRED., Auchinbothie, Kilmacolm, G. 24 Mar., 1885; M. 20 Nov., 1896

LOCKIE, JOHN, Wh.Sc., 2 Custom House Chambers, Leith, 26 Jan., 1897

LONDON, WILLIAM J. A., The Westinghouse Machine Co., East Pittsburg, Pa., U.S.A., 23 Jan., 1906

LONGBOTTOM, Professor JOHN GORDON, Technical College, George street, Glasgow, 22 Nov., 1898

LORIMER, ALEXANDER SMITH, Orenda, Merrylea road, Newlands, Glasgow, { G. 21 Nov., 1899 / M. 27 Oct., 1903

†LORIMER, WILLIAM, Glasgow Locomotive works, Gushetfaulds, Glasgow, 27 Oct., 1896

†LOUDON, GEORGE FINDLAY, 10 Claremont Terrace, Glasgow, 25 Jan., 1896

LOWSON, JAMES, 10 West Campbell street, Glasgow, 27 Oct., 1903

LUKE, W. J., Messrs John Brown & Co., Ltd., Clydebank, 24 Jan., 1898

LUSK, HUGH D., c/o Mrs Nelson, Larch villa, Annan, 21 Feb., 1880

LYALL, JOHN, 33 Randolph gardens, Partick, 27 Oct., 1888

MACALPINE, JOHN H., 615 Walnut street, Philadelphia, U.S.A., 20 Dec., 1898

M'ARTHUR, DUNCAN, The British Corporation Registry of Shipping, St. Thomas street, Sunderland, 20 Dec., 1904

M'ARTHUR, JAMES D., Consulting Engineer, Bangkok, Siam, 26 Apr., 1898

†MACCOLL, HECTOR, Bloomfield, Belfast, 24 Mar., 1874

†MACCOLL, HUGO, Wreath Quay Engineering works, Sunderland, { G. 20 Dec., 1881 / M. 22 Oct., 1889

M'COLL, PETER, 5 Thornwood gardens, Partick, { G. 18 Dec., 1883 / M. 24 Jan., 1899

M'CREATH, JAMES, 208 St. Vincent street, Glasgow, 23 Oct., 1888

M'DONALD, ALEX., 9 Sutherland street, Hillhead, Glasgow, 24 Jan., 1905

MACDONALD, ALFRED W., 256 Argyle street, Glasgow, 19 Feb., 1907

MACDONALD, D. H., Brandon works, Motherwell, 24 Mar., 1896

MACDONALD, JOHN, Bridge Turbine Works, Pollokshaws, Glasgow, { G. 18 Dec. 1883 / M. 21 Mar., 1899

MACDONALD, JOHN DRON, 3 Rosemount terrace, Ibrox, Glasgow, 19 Mar., 1901

MACDONALD, ROBERT COWAN, 47 Farnham terrace, Sunderland, { G. 21 Nov., 1899 / M. 28 Apr., 1903

MACDONALD, THOMAS, 9 York street, Glasgow, 25 Jan., 1898

MACDONALD, WILLIAM, 4 Rosslyn terrace, Rutherglen, 22 Dec., 1903

MCDOUGALL, ROBERT MELVIN, 86 Dale street, Glasgow, 20 Nov., 1900

M'DOWALL, JOHN JAS., Vulcan Engine Works, Piraeus, Greece, 29 Oct., 1901

M'EWAN, JOSEPH, 35 Houldsworth street, Glasgow, 27 Jan., 1891

MACFARLANE, DUNCAN, 58 Hydepark street, Glasgow, { G. 26 Oct., 1897 / M. 27 Oct., 1903

MACFARLANE, JAMES W., Cartbank, Cathcart, Glasgow, 2 Nov., 1880

MCFARLANE, GEORGE, 34 West George street, Glasgow, { G. 24 Feb., 1874 / M. 24 Nov., 1885

†MACFARLANE, WALTER, 22 Park Circus, Glasgow, 26 Oct., 1886

M'GEE, DAVID, c/o Messrs John Brown & Co., Clydebank, 22 Dec., 1896

†M'GEE, WALTER, Stoney brae, Paisley, 25 Jan., 1898

M'GIBBON, W. C., 2 Carlton Court, Bridge street, Glasgow, 18 Dec., 1900

McGREGOR, JOHN B., 6 Oxford terrace, Renfrew, G. 18 Dec., 1883; M. 27 Apr., 1897

McGREGOR, THOMAS, 10 Moncsfield terrace, Springburn, Glasgow, 26 Jan., 1886

M'ILVENNA, JOHN, 13 Caird drive, Partickhill, Glasgow, 19 Mar., 1901

MACILWAINE, GEORGE W., 279 Byres road, Hillhead, Glasgow, 18 Mar., 1902

M'INTOSH, DONALD, Dunglass, Bowling, 20 Feb., 1894

M'INTOSH, JOHN, Abbey Craig, Abbotsinch, Paisley, G. 22 Jan., 1895; M. 27 Oct., 1903

M'INTOSH, JOHN F., Caledonian Railway, St. Rollox, Glasgow, 28 Jan., 1896

McINTOSH, THOS. WILLIAM, 58 Hydepark street, Glasgow 24 Nov., 1903

MACKINTOSH, JOHN, 4 Regent terrace, Whitehaugh drive, Paisley, G. 18 Dec., 1894; M. 28 Apr., 1903

MACKAY, HENRY JAMES, 6 Sutherland terrace, Hillhead, Glasgow, 18 Feb., 1902

MACKAY, LEWIS CHAMBERS, 55 West Regent street, Glasgow, G. 22 Dec., 1896; M. 22 Nov., 1904

MACKAY, W. NORRIS, Messrs Ralston, Goodwin & Co., Craighall Iron works, Glasgow, S. 22 Jan., 1901; M. 25 Oct., 1904

M'KEAND, ALLAN, 3 St. James street, Hillhead, Glasgow, G. 19 Dec., 1884; M. 20 Mar., 1892

McKECHNIE, JAMES, Messrs Vickers, Sons, & Maxim, Barrow-in-Furness, 24 Apr., 1888

MACKENZIE, JAMES, 8 St. Alban's road, Bootle, G. 25 Oct., 1889; M. 24 Jan., 1891

MACKENZIE, THOMAS B., Netherby, Manse road, Motherwell, G. 23 Jan., 1885; M. 26 Nov., 1893

McKENZIE, JOHN, Messrs J. Gardiner & Co., 24 St. Vincent place, Glasgow, 25 Apr., 1893

McKENZIE, JOHN, Speedwell Engineering works, Coatbridge, 25 Jan., 1898

MACKIE, WILLIAM, 8 Inverclyde gardens, Broomhill, Partick, G. 21 Dec., 1897; M. 24 Mar., 1903

MACKIE, WILLIAM A., Falkland bank, Partickhill, Glasgow, 22 Mar., 1881

McKIE, J. A., Copland works, Govan. 25 Jan., 1898

†MACKINLAY, JAMES T. C., 110 Gt Wellington street, Kinning park, Glasgow, 27 Oct., 1896

M'KILLOP, PETER ALEXANDER, 45 Hope street, Glasgow, 21 Mar., 1905

M'KINNEL, WILLIAM, c/o Messrs S. Osborne & Co., Clyde Steel Works, Sheffield. A. 21 Feb., 1893; M. 22 Feb., 1898

M'LACHLAN, EWEN, 168 Kenmure street, Pollokshields, Glasgow, 21 Feb., 1899

MCLACHLAN, JOHN, Saucel Bank House, Paisley, 26 Oct., 1897

MACLAREN, JOHN F., B.Sc., Eglinton foundry, Canal street, Glasgow, 23 Feb., 1892

MACLAREN, ROBERT, Eglinton foundry, Canal street, Glasgow, G. 2 Nov., 1880; M. 22 Dec., 1885

MCLAREN, RICHARD ANDREW, South Gallowhill house, Paisley, 21 Apr., 1903

MCLAREN, WILLIAM, 9 Westbank quadrant, Hillhead, Glasgow, 26 Nov., 1901

MCLAURIN, DUNCAN, 217-219 Mercer street, New York, U.S.A. 23 Oct., 1900

MACLAY, DAVID M., Dunourne, Douglas street, Motherwell, 18 Dec., 1900

†MACLEAN, ANDREW, Messrs Barclay, Curle & Co., Whiteinch, Glasgow, 3 May, 1904

MACLEAN, Prof. MAGNUS, M.A., D.Sc., 51 Kersland street, Hillhead, Glasgow, 21 Nov., 1899

MACLEAN, WILLIAM DICK, Calle Vapor del Fil 1, San Andres de Palomar, Barcelona, Spain, 25 Jan., 1898

MCLEAN, JOHN, Messrs Weir & McLean, 45 Hope street, Glasgow, 16 Dec., 1902

MCLEAN, JOHN, Lower Barraca, Valetta, Malta, G. 21 Nov., 1899; M. 22 Dec., 1903

†MACLELLAN, WILLIAM T., Clutha Iron works, Glasgow, 21 Dec., 1886

MCLELLAN, ALEX., Clyde Navigation Trust, 16 Robertson street, Glasgow, G. 18 Dec., 1900; A.M. 18 Ap., 1903; M. 27 Oct., 1903

MCLEOD, ANDREW MACNICOL, 389 Gairbraid terrace, Maryhill, Glasgow, 19 Mar., 1907

MACMILLAN, HUGH MILLAR, B.Sc., Messrs Workman, Clark & Co., Belfast Shipyard, Belfast, 18 Dec., 1900

*†MACMILLAN, WILLIAM, Holmwood, Whittingehame drive, Kelvinside, Glasgow, Mar., 1863

MCMILLAN, JOHN, Resident Electrical Engineer's Office, Falkirk, G. 27 Jan., 1885; M. 24 Jan., 1899

MCMILLAN, W. MACLEOD, Dockyard, Dumbarton, 22 Jan., 1901

MACMURRAY, WILLIAM, Taller Bisayas, Yloilo, Philippine Islands, 18 Mar., 1902

MCMURRAY, THOMAS H., 22 Cliftonville avenue, Belfast, 22 Jan., 1901

M'NAIR, JAMES, Norwood, Prestwick road, Ayr, 26 Nov., 1895

MACNAMARA, JOSEPH, Chief Electrical Engineer, Egyptian State Railways, Cairo, Egypt, 20 Jan., 1903

M'NEIL, JOHN, Helen street, Govan, 23 Dec., 1884

MACNICOLL, NICOL, 6 Dixon street, Glasgow, 19 Mar., 1901

M'ONIE, PETER SMITH, 9 Grant street, Greenock, 20 Dec., 1904

MACOUAT, R. B., Victoria Bolt and Rivet works, Cranstonhill, Glasgow, 21 Mar., 1899

M'WHIRTER, WILLIAM, 214 Holm street, Glasgow, 24 Mar., 1891

MACK, JAMES, Caledonian Railway Coy., District Engineer's Office, Princes street station, Edinburgh, G. 21 Dec., 1886 M. 20 Dec., 1898

MAIN, ARCHIBALD POLLOK, 2 Kirklea gardens, Kelvinside, Glasgow, 19 Mar., 1907

MAITLAND, CREE, The Crane works, Parkhead, Glasgow, 23 Apr., 1907

MALCOLM, WILLIAM GEORGE, Boyack house, Pollokshields, Glasgow, 21 Feb., 1905

MANSON, JAMES, G. & S. W. Railway, Kilmarnock, 21 Feb., 1899

MARRIOTT, ALFRED, 44 Kelburne avenue, Dumbreck, Glasgow, 20 Dec., 1904

MARRIOTT, REUBEN, Plantation Boiler Works, Govan, 23 Feb., 1897

MARSHALL, ALEXANDER, Glenmavis, Melrose avenue, Rutherglen, 21 Mar., 1905

MARSHALL, DAVID, Glasgow Tube works, Glasgow, 22 Jan., 1895

MARTIN, WILLIAM CRAMMOND, 10 West Campbell street, Glasgow, 27 Oct., 1903

MATHESON, DONALD A., Caledonian Railway Co., Buchanan street station, Glasgow, 26 Jan., 1897

MATHEWSON, GEORGE, Bothwell works, Dunfermline, 21 Dec., 1875

MATHIESON, JAMES H., Saracen Tool Works, Glasgow, 29 Oct., 1901

MATTHEY, C. A., c/o W. Hope Campbell, Esq., 42 Krestchatik, Kieff, S. Russia, 26 Oct., 1897

MAVOR, HENRY A., 47 King street, Bridgeton, Glasgow, 22 Apr., 1884

MAVOR, SAM, 37 Burnbank gardens, Glasgow, 20 Nov., 1894

MAXTON, JAMES, 4 Ulster street, Belfast, 22 Jan., 1901

MAY, WILLIAM W., Woodbourne, Minard avenue, Partickhill, Glasgow, 25 Jan., 1876

MAYER, WILLIAM, Morwell House, Dumbarton, 23 Feb., 1897

†MECHAN, HENRY, Scotstoun Iron works, Glasgow, 25 Jan., 1887

MECHAN, SAMUEL, 22 Kingsborough gardens, Kelvinside Glasgow, 27 Oct., 1891

MELLANBY, Professor ALEX. LAWSON, D.Sc., Technical College, 204 George street, Glasgow, 19 Dec., 1905

MELVILLE, WILLIAM, Glasgow and South Western Railway, St. Enoch station, Glasgow, 23 Jan., 1883

MIDDLETON, R. A., 20 The Grove, Benton, near Newcastle-on-Tyne, G. 24 Jan., 1882 M. 28 Oct., 1890

MILLAR, SIDNEY, Harthill house, Cambuslang, G. 26 Feb., 1889 M. 21 Dec., 1897

MILLAR, THOMAS, Bannachra, Broughty Ferry, N B., G. 25 Nov., 1884 M. 27 Oct., 1903

MILLAR, WILLIAM, Towersland, Octavia terrace, Greenock, 19 Dec., 1899

MILLER, ARTHUR C., 12 Caird drive, Partickhill, Glasgow, 19 Mar., 1901

MILLER, GEORGE M'EWAN, 8 Clydeview, Partick, 25 Oct., 1904

MILLER, HUGH, 67 Danes drive, Scotstoun, Glasgow, 21 Nov., 1905

MILLER, JAMES, 12 Dungoyne gardens, Maryhill, Glasgow, G. 22 Nov., 1898; M. 2 May, 1905

MILLER, JOHN, Etruria villa, South Govan, G. 23 Apr., 1889; M. 2 May, 1905

MILLER, ROBERT F., Messrs Wardlaw & Miller, 109 Bath street, Glasgow, G. 25 Feb., 1890; M. 27 Oct., 1903

MILNE, CHARLES W., Fairmount, Scotstounhill, Glasgow, 26 Nov., 1901

MILNE, GEORGE, 10 Bothwell street, Glasgow, 22 Jan., 1901

MITCHELL, ALEXANDER, Hayfield house, Springburn, Glasgow, 26 Jan., 1886

MITCHELL, GEORGE A., F.R.S.E., 5 West Regent street, Glasgow, 25 Jan., 1898

MITCHELL, THOMAS, 220 St. Vincent street, Glasgow, 20 Nov., 1888

MOIR, ERNEST W., c/o Messrs S. Pearson & Son. 10 Victoria street, Westminster, London, G. 25 Jan., 1881; M. 24 Jan., 1899

MOIR, JAMES, 70 Wellington street, Glasgow, 16 Dec., 1902

MOIR, JOHN, Clyde Shipbuilding and Engineering Company, Port-Glasgow, 23 Feb., 1897

MOIR, THOMAS, 2 Heathfield terrace, Springburn, Glasgow, 23 Apr., 1901

MOLLISON, HECTOR A., B.Sc., 33 Fotheringay road, Maxwell Park, Glasgow, G. 22 Nov., 1892; M. 20 Nov., 1900

MOLLISON, JAMES, 30 Balshagray avenue, Partick, 21 Mar., 1876

MONROE, ROBERT, Eastbrook house, Dinas Powis, Glam., 26 Jan., 1904

MOORE, RALPH D., B.Sc., Denehollow, Bearsden, 27 Apr., 1897

MOORE, ROBERT H., Caledonian Steel Castings Co., Govan, 16 Dec., 1902

MOORE, ROBERT T., D.Sc., 13 Clairmont gardens, Glasgow, 27 Jan., 1891

MORGAN, ROBERT, Arnsbrae, Dumbreck, Glasgow, 24 Mar., 1903

MORISON, WILLIAM, 23 St. Andrew's drive, Pollokshields, Glasgow, 20 Mar., 1888

MORISON, WILLIAM B., 7 Rowallan gardens, Broomhill, Glasgow, 20 Nov., 1900

MORRICE, RICHARD WOOD, 117 Moss Side road, Shawlands, Glasgow, 23 Feb., 1897

MORRISON, ARTHUR MACKIE, Merchiston, Scotstounhill, Glasgow, W., G. 17 Dec., 1889; M. 8 Mar., 1903

MORRISON, WILLIAM, 185 Albert road, Langside, Glasgow, 19 Feb., 1901

MORT, WILLIAM, 41 Hamilton terrace, Partick, 24 Oct., 1905

MORTON, DAVID HOME, 130 Bath street, Glasgow, 20 Nov., 1900

MORTON, ROBERT, 8 Prince's square, Buchanan street, Glasgow, G. 17 Dec., 1878; M. 23 Jan., 1883

MORTON, ROBERT C., 32 Vinicombe street, Hillhead, Glasgow, 26 Nov., 1901

MORTON, THOMAS M. G., Logie house, Logie, nr. Montrose, 26 Jan., 1904

MOTION, ROBERT, Gowanbrae, Lenzie, 23 Feb., 1892

MOWAT, MAGNUS, Civil Engineer, Millwall Docks, London, G. 26 Oct., 1897 M. 26 Nov., 1901

MOYES, JOHN YOUNG, 27 Moray avenue, Scotstoun, Glasgow, 27 Oct., 1903

†MUIR, HUGH, 7 Kelvingrove terrace, Glasgow, 17 Feb., 1864

MUIR, JAMES, c/o Mr Calvert, 23 Broomhill terrace, Partick, W. 21 Feb., 1905

MUIR, JAMES E., 105 West George street, Glasgow, 22 Dec., 1896

†MUIR, JOHN G., 24 Jan., 1882

MUIR, PETER GILLESPIE, 24 Laburnum avenue, Wallsend-on-Tyne, 18 Mar., 1902

MUIR, ROBERT WHITE, 97 St. James road, Glasgow, 21 Dec., 1897

MUMME, CARL, 30 Newark street, Greenock, 22 Oct., 1895

MUMME, ERNEST CHARLES, Resident Engineer, Bengal & North-Western Railway, Gorakhpur, U.P., India, G. 22 Nov., 1892 M. 20 Feb., 1900

MUNN, ROBERT A., Twynham, 5 Winn road Southampton, 22 Dec., 1896

MUNRO, HUGH, B.Sc., Messrs Glenfield & Kennedy, Ltd., Kilmarnock, 20 Nov., 1906

MUNRO, JAMES, Torquil, Carmyle avenue, Carmyle, 16 Dec., 1902

MUNRO, JOHN, 51 Polworth gardens, Hyndland, Glasgow, 23 Apr., 1901

MUNRO, ROBERT D., 121 West Regent street, Glasgow, 19 Dec., 1882

MURDOCH, FREDERICK TEED, Nile House, Mansourah, Egypt, 25 Feb., 1896

MURDOCH, J. A., 23 Robertson street, Glasgow, G. 25 Oct., 1892 M. 20 Nov., 1900

MURRAY, ANGUS, Strathroy, Dumbreck, G. 14 May, 1878 M. 19 Nov., 1889

MURRAY, HENRY, Shipbuilder, Port-Glasgow, 22 Dec., 1896

MURRAY, JAMES, Rosebank, Port-Glasgow, 22 Dec., 1896

MURRAY, RICHARD, 109 Hope street, Glasgow, 26 Oct., 1897

MURRAY, THOMAS, 7 Kilmailing road, Cathcart, Glasgow, 19 Mar., 1907

MURRAY, THOMAS BLACKWOOD, B.Sc., 92 Camperdown road, Scotstoun, Glasgow, 22 Dec., 1891

MURRAY, THOMAS R., Keverstone, Cleveland walk, Bath, 25 Feb., 1896

MYLES, DAVID, Northumberland Engine works, Wallsend-on-Tyne, G. 20 Dec., 1887 M. 19 Dec., 1899

MYLNE, ALFRED, 81 Hope street, Glasgow, G. 26 Jan., 1897 M. 24 Mar., 1903

NAGAO, HANPEI, c/o Taipeifu, Formosa, Japan, 24 Dec., 1901

NAPIER, HENRY M., Shipbuilder, Old Kilpatrick, 25 Jan., 1881

NAPIER, JOHN STEWART, Herbertshire, Meikleriggs, Paisley, 21 Nov., 1905

†NAPIER, ROBERT T., 75 Bothwell street, Glasgow, 20 Dec., 1881

NEEDHAM, JAMES H., Rossbank, Port-Glasgow, 18 Mar., 1902

NEILL, HUGH, Jun., 137 Hyndland road, Hyndland, Glasgow, G. 21 Nov., 1899 M. 8 May, 1904

NEILSON, JAMES, Alma boiler works, Glasgow, 24 Mar., 1903

NELSON, ANDREW S., Snowdon, Sherbrooke avenue, Pollokshields, Glasgow, 27 Oct., 1896

NIELSON, JOHN FREDERICK, Messrs John Brown & Co., Ltd., Clydebank, 24 Nov., 1903

NESS, GEORGE, 111 Union street, Glasgow, 23 Feb., 1897

NICOL, R. GORDON, 15 Regent Quay, Aberdeen, 20 Nov., 1900

†NORMAN, JOHN, 65 West Regent street, Glasgow, 11 Dec., 1861

O'CONNOR, OWEN M'DONALD, Curepipe, Mauritius, 21 Nov., 1905

O'NEILL, J. J., 19 Roxburgh street, Kelvinside, Glasgow, 24 Nov., 1896

OLIPHANT, WILLIAM, 207 Bath street, Glasgow, 23 Feb., 1897

ORR, ALEXANDER T., Marine Department, London and North-Western Railway, Holyhead, 24 Mar., 1883

ORR, JOHN R., Nessville, Avon street, Motherwell, 24 Jan., 1899

OSBORNE, HUGH, 108A West Regent street, Glasgow, G. 22 Dec., 1891 M. 27 Oct., 1903

PARK, F. A., B.Sc., The Singer Manufacturing Company, Kilbowie, Clydebank, 24 Oct., 1905

PARKER, EDWARD HENRY, 11 Strathmore gardens, Hillhead, Glasgow, 16 Dec., 1902

PARKER, GEORGE GLADSTONE, Rossbank, Port Glasgow, 21 Oct., 1905

PARSONS, The Hon. CHARLES ALGERNON, M.A., C.B., Holeyn Hall, Wylam-on-Tyne, 28 Apr., 1903

PATERSON, JAMES V., The Moran Co., Seattle, State of Washington, U.S.A. G. 24 Jan., 1888 M. 27 Oct., 1903

PATERSON, JOHN, Edradour, Dalmuir, 22 Jan., 1901

PATERSON, MAURICE, 7 Hillside crescent, Edinburgh, 23 Apr., 1907

PATERSON, W. L. C., 5 Elmwood terrace, Jordanhill, Glasgow, 21 Nov., 1883

PATERSON, WILLIAM W., Mount Stuart, Ayr, 23 Apr., 1907

PATRICK, ANDREW CRAWFORD, Johnstone, 25 Jan., 1898

PATRICK, FREDERICK WILLIAM, Trafford Bank, Cawdor road, Bishopbriggs, Glasgow, 23 Apr., 1907

PATTERSON, JAMES, Maryhill Iron works, Glasgow, 22 Nov., 1898
PATTERSON, JAMES, 130 Elliot street, Glasgow, 18 Dec., 1900
PAUL, H. S., Levenford works, Dumbarton, 24 Jan., 1899
PAUL, JAMES, Kirkton, Dumbarton, 24 Mar., 1903
PAUL, MATTHEW, Levenford works, Dumbarton, G. 26 Feb., 1884 M. 21 Dec., 1886
PAYNE, GEORGE, 7 Travessa do Caes do Tojo, Lisbon, 18 Dec., 1906
PEACOCK, JAMES, Oriental Steam Navigation Co., 13 Fenchurch avenue, London, E.C. G. 22 Nov., 1881 M. 21 Feb., 1899
PEARSON, THOMAS, Poplar villa, Maryhill, Glasgow,* 2 May, 1905
PECK, EDWARD C., Messrs Yarrow & Company, Poplar, London, G. 23 Dec., 1873 M. 23 Oct., 1882
PECK, JAMES J., 52 Randolph gardens, Broomhill, Glasgow, 22 Dec., 1896
PECK, NOEL E., 6 Crown mansions, Partickhill, Glasgow, 18 Dec., 1900
PENMAN, ROBERT REID, 36 Circus drive, Dennistoun, Glasgow, 25 Jan., 1898
PENMAN, WILLIAM, Springfield house, Dalmarnock, Glasgow, 25 Jan., 1898
PERITON, WILLIAM JOHN, 13a Drury buildings, 23 Water street, Liverpool, 25 Oct., 1904
PETROFF, ALEXANDER, 26 Gledhow gardens, London, S.W., 19 Mar., 1901
PHILIP, WILLIAM LITTLEJOHN, Sherbrooke, Box, Wilts, 24 Jan., 1899
PICKERING, JONATHAN, 50 Wellington street, Glasgow, 3 Mar., 1903
POCOCK, J. HERBERT, 39 Falkland mansions, Kelvinside, Glasgow, 29 Oct., 1901
POLLOK, ROBERT, Messrs John Brown & Co., Clydebank, 22 Dec., 1896
POOLE, WILLIAM JOHN, 65 Renfield street, Glasgow, 20 Dec., 1898
POOLEY, JOHN SIBTHORPE, Eblana, Thorn drive, Bearsden, 19 Feb., 1907
POPE, ROBERT BAND, Engine works, Dumbarton, 25 Oct., 1887
PORTCH, ERNEST C., 37 Vicar's hill, Ladywell, London, S.E., G. 26 Oct., 1897 M. 25 Oct., 1904
PRINGLE, WILLIAM S., 126 Osborne place, Aberdeen, G. 24 Oct., 1893 M. 16 Dec., 1902
PURDON, ARCHIBALD, Ardenlea, Port-Glasgow, 27 Apr., 1897
PURVES, J. A., D Sc., F.R.S.E., Queen street chambers, Exeter, 25 Oct., 1898
PURVIS, Prof. F. P., College of Naval Architecture, Imperial University, Tokio, Japan, 20 Nov., 1877
PUTNAM, THOMAS, Darlington Forge Co., Darlington, 15 June, 1898
PYLE, JAMES H., 88 Elliot street, Glasgow, 28 Feb., 1897

RAEBURN, CHARLES E., 12 Vinicombe street, Hillhead, Glasgow, 24 Oct., 1899

RAMAGE, RICHARD, Shipbuilder, Leith, 22 Apr., 1873

RANKIN, JOHN F., Eagle foundry, Greenock, 23 Mar., 1886

RANKIN, MATTHEW, c/o Messrs Rankin & Demas, Engineers, Smyrna, G. 2 Nov., 1880; M. 20 Mar., 1894

RANKIN, RICHARD LEES, Norwood, Balloch, 19 Dec., 1905

RANKIN, ROBERT, Jun., 17 Dumbreck road, Glasgow, 22 Jan., 1901

RANKINE, DAVID, 238 West George street, Glasgow, 22 Oct., 1872

RAPHAEL, ROBERT A., 72 Minard road, Crossmyloof, Glasgow, G. 24 Dec., 1895; M. 27 Oct., 1903

REED-COOPER, T. L., 20 St. Leonard's road, Ealing, W., London, 22 Dec., 1896

REID, ANDREW T., Hydepark Locomotive works, Glasgow, G. 21 Dec., 1886; M. 18 Dec., 1894

REID, GEORGE W., Inchanga, Hillfoot, Bearsden, 21 Nov., 1883

REID, J. MILLER, 110 Lancefield street, Glasgow, 23 Mar., 1897

†REID, JAMES, Shipbuilder, Port-Glasgow, 17 Mar., 1869

REID, JAMES, 3 Cart street, Paisley, 25 Jan., 1898

REID, JAMES, Station house, Troon, 23 Apr , 1907

†REID, JAMES B., Chapelhill, Paisley, 24 Nov., 1891

REID, JAMES LOW, Hooghly Docking and Engineering Co., Ltd., Howrah, Bengal, India, 19 Feb., 1907

†REID, JOHN, 7 Park terrace, Kelvinside, Glasgow, G. 21 Dec., 1886; M. 18 Dec., 1894

REID, JOHN WILSON, c/o Messrs Aspinwall & Co., Cochin, Malabar Coast, 21 Jan., 1902

REID, ROBERT, British India Steam Navigation Co , Ltd., Colombo, Ceylon, 2 May 1905

REID, ROBERT W., 958 Sauchiehall street, Glasgow, 23 Jan., 1906

REID, THOMAS, Jun., Potterhill, Paisley, 18 Dec., 1900

REID, W. J. H., Redlea, Linwood, Nr. Paisley, 16 Dec., 1902

REID, WILLIAM PATON, 32 Buckingham terrace, Glasgow, W., 23 Feb., 1904

RENNIE, ARCHIBALD, 5 Bawhirley road, Greenock, S. 31 Oct., 1902; M. 28 Apr., 1903

REYNOLDS, CHARLES H., Colonial House, 155 Fenchurch street, London, E.C., G. 23 Dec., 1873; M. 22 Nov., 1881

RICHARDSON, ANDREW, Soho Engine works, Paisley, 26 Jan., 1904

RICHMOND, Sir DAVID, North British Tube works, Govan, 21 Dec., 1897

RICHMOND, JAMES, Roselyn, 95 Maxwell drive, Pollokshields, Glasgow, G. 23 Jan., 1894; M. 23 Oct., 1900

RICHMOND, JOHN R., Holm foundry, Cathcart, Glasgow, 28 Jan., 1896

RIDDELL, W. G., c/o Messrs John Hastie & Co., Kilblain Engine Works, Greenock, 21 Feb., 1899

RIEKIE, JOHN, Argaith, Dumbreck, Glasgow, 29 Oct., 1901

RISK, ROBERT, Halidon Villa, Cambuslang, 23 Mar., 1897

RITCHIE, DUNCAN, 293 Onslow drive, Dennistoun, Glasgow, 16 Dec., 1902

RITCHIE, GEORGE, Parkhead Forge, Glasgow, 15 June, 1898

ROBERTS, W. G. 29 Oct., 1901

ROBERTSON, ALEXANDER, Jun., c/o Messrs Matthew Reid & Co., Kilmarnock, 22 Dec., 1896

ROBERTSON, ALEXANDER, 8 Darnley road, Pollokshields, Glasgow, G. 26 Oct., 1886 M. 23 Feb., 1904

ROBERTSON, ANDREW R., 8 Park Circus place, Glasgow, G. 12 Nov., 1892 M. 23 Feb., 1897

ROBERTSON, Prof. DAVID, B.Sc., 5 Elmgrove road, Cotham, Bristol, G. 19 Dec., 1899 M. 28 Apr., 1903

ROBERTSON, DAVID W., Dalziel Bridge works, Motherwell, 26 Nov., 1901

ROBERTSON, DUNCAN, Baldroma, Ibrox, Glasgow, 24 Oct., 1876

ROBERTSON, ROBERT, B.Sc., 154 West George street, Glasgow, 20 Nov., 1900

ROBIN, MATTHEW, Lanfine, Dumbreck, Glasgow, G. 20 Dec., 1887 M. 25 Jan., 1898

ROBINSON, J. F., 17 Victoria street, Westminster, London, 24 Apr., 1888

ROBINSON, ROBERT, 54 Balshagray avenue, Partick, 3 Mar., 1903

RODGER, ANDERSON, Glenpark, Port-Glasgow, 21 Mar., 1893

RODGER, ANDERSON, Jun., Glenpark, Port-Glasgow, G. 15 June, 1898 M. 3 May, 1904

ROGER, GEORGE WILLIAM, 4 Lloyd's avenue, Fenchurch street, London, E.C., G. 24 Nov., 1896 M. 18 Dec., 1900

ROGERSON, THOMAS BOND, East Thorne, Tollcross, Glasgow, 20 Feb., 1906

ROSE, JOSEPH, Westoe, Scotstounhill, Glasgow, 3 May, 1904

ROSENTHAL, JAMES H., Oriel House, 30 Farringdon street, London, 24 Nov., 1896

ROSS, J. MACEWAN, St. Helens, Troon, G. 28 Nov., 1882 M. 27 Oct., 1891

ROSS, JAMES R., 7 Ashfield gardens, Jordanhill, Glasgow, 24 Nov., 1896

ROSS, RICHARD G., 21 Greenhead street, Glasgow, 11 Dec., 1861

ROSS, WILLIAM, 27 Thistle street, Glasgow, S.S., 18 Dec., 1900

ROWAN, FREDERICK JOHN, 5 West Regent street, Glasgow, 26 Jan., 1892

ROWLEY, THOMAS, Board of Trade Offices, Virginia street, Greenock, 18 Dec., 1888

ROY, WILLIAM, Bowden view, Melksham, Wilts, G. 25 Jan., 1898 M. 21 Apr., 1903

ROYDS, ROBERT, M.Sc., Technical College, George street, Glasgow, 20 Dec., 1904

RUDD, JOHN A., 68 Gordon street, Glasgow, { G. 24 Jan., 1888 / M. 15 June, 1898

RUSSELL, ALEXANDER C., 3 Strathyre street, Shawlands, Glasgow, { G. 15 Apr., 1902 / M. 22 Dec., 1903

†RUSSELL, GEORGE, Belmont, Uddingston, { G. 22 Dec., 1858 / M. 4 Mar., 1863

†RUSSELL, JAMES, Waverley, Uddingston, { G. 24 Nov., 1891 / M. 25 Jan., 1898

RUSSELL, JAMES E., c/o Douglas, 33 Blythswood drive, Glasgow, W., { G. 22 Dec., 1891 / M. 27 Oct., 1903

RUSSELL, JOSEPH, Shipbuilder, Port-Glasgow, 22 Feb., 1881

RUSSELL, JOSEPH WILLIAM, 39 Esplanade, Greenock, { G. 6 Apr., 1887 / M. 25 Jan., 1898

SADLER, Prof. HERBERT C., D.Sc., University of Michigan, Ann Arbor, Michigan, U.S.A. { G. 19 Dec., 1893 / M. 23 Oct., 1900

SAMPSON, ALEXANDER W., Bonnington, 9 Beech avenue, Bellahouston, Glasgow, 22 Dec., 1896

SAMSON, PETER, Board of Trade Offices, 54 Victoria street, Westminster, London, S.W., 24 Oct., 1876

SAMUEL, JAMES, Jun., 185 Kent road, Glasgow, 24 Feb., 1885

SAYERS, JAMES EDMUND, 157 West George street, Glasgow, 24 Dec., 1901

SAYERS, WILLIAM BROOKS, 189 St. Vincent street, Glasgow, 25 Oct., 1892

SCHARINA, WILLIAM E. H., 163 Hope street, Glasgow, 18 Dec., 1906

†SCOBIE, JOHN, c/o Alfred Scobie, Esq., 58 West Regent street, Glasgow, { G. 25 Mar., 1878 / M. 23 Oct., 1889

SCOTT, ALLAN, Messrs Chambers, Scott & Co., Engineers, Motherwell, 23 Jan., 1906

SCOTT, ARCHIBALD, Jun., 8 Kenmure street, Pollokshields, Glasgow, 23 Apr., 1907

SCOTT, CHARLES CUNNINGHAM, Greenock Foundry, Greenock, 27 Oct., 1896

SCOTT, CHARLES WOOD, Dunarbuck, Bowling, 15 June, 1898

SCOTT, JAMES, Rock Knowe, Tayport, N.B., 22 Dec., 1896

SCOTT, JAMES, Jun., Strathclyde, Bowling, 15 June, 1898

SCOTT, JOHN W. P., 11 Grantly gardens, Shawlands, Glasgow, 19 Mar., 1907

SCOTT, ROBERT B., Rock Knowe, Tayport, N.B., 23 Oct., 1906

SEATH, WILLIAM Y., 121 St. Vincent street, Glasgow, { G. 23 Mar., 1886 / M. 27 Oct., 1903

SEMPLE, WILLIAM, Coral Bank, Bertrohill road, Shettleston, { S. 21 Jan., 1902 / M. 23 Apr., 1907

SHANKS, JAMES KIRKWOOD, Viewfield, Denny, 23 Apr., 1901

SHANKS, WILLIAM, Tubal works, Barrhead, 15 June, 1898

SHARER, EDMUND, Scotstoun house, Scotstoun, Glasgow, 30 Apr., 1895

SHARP, JOHN, 28 Burnbank gardens, Glasgow, G. 24 Oct., 1882 M. 22 Nov., 1898

SHARPE, ROBERT, Corporation Gas Works, Belfast, 22 Jan., 1901

SHEARER, Sir JOHN, 13 Crown terrace, Dowanhill, Glasgow, 23 Oct., 1900

SHEPHERD, JOHN W., Carrickarden, Bearsden, 26 Mar., 1889

SHUTE, ARTHUR E., 12 Clydeview, Partick, Glasgow, 27 Oct., 1896

SHUTE, CHARLES W., The Union-Castle Mail Steamship Co., Ltd., 3 and 4 Fenchurch street, London, E.C., 27 Oct., 1896

SHUTE, T. S., 3 Valebrooke, Tunstall road, Sunderland, G. 19 Dec., 1893 M. 22 Feb., 1898

SIBBALD, THOMAS KNIGHT, c/o Messrs Cook & Son, Ltd., Cairo, Egypt, G. 26 Oct., 1897 M. 24 Oct., 1905

SIME, JOHN, 96 Buchanan street, Glasgow, 26 Jan., 1897

SIME, WILLIAM, Victoria Biscuit works, Glasgow, 1 May, 1906

†SIMPSON, ALEXANDER, 175 Hope street, Glasgow, 22 Jan., 1862

SIMPSON, ROBERT, B.Sc., 175 Hope street, Glasgow, 25 Jan., 1887

SIMPSON, WILLIAM, 15 Regent Quay, Aberdeen, 20 Nov., 1900

SINCLAIR, NISBET, 2 Gardenside avenue, Carmyle, G. 20 Mar., 1877 M. 20 Dec., 1887

SLIGHT, GEORGE H., Jun., c/o James Slight, Esq., 131 West Regent street, Glasgow, G. 28 Nov., 1882 M. 22 Oct., 1889

SMAIL, DAVID, 45 Hope street, Glasgow, 22 Jan., 1901

SMALL, WILLIAM O., Douglas avenue, Carmyle, 28 Feb., 1897

SMART, LEWIS A., 31 Budge row, London, E.C., 22 Mar., 1898

SMILLIE, SAMUEL, 71 Lancefield street, Glasgow, A. 24 Jan., 1888 M. 22 Feb., 1898

SMITH, ALEXANDER, 653 Shields road, Glasgow, G. 24 Nov., 1891 M. 29 Oct., 1901

SMITH, CHARLES R., 5 Albert gate, Dowanhill, Glasgow, 23 Oct., 1906

SMITH, HERBERT GARDNER, Hartfield, Helensburgh, 26 Nov., 1901

SMITH, HUGH WILSON, Netherby, N. Albert road, Pollokshields, Glasgow, 25 Jan., 1898

SMITH, JAMES, Tinley Manor, Chakas Kraal, Durban, South Africa, 23 Oct., 1888

SMITH, OSBOURNE, Possil Engine works, Glasgow, 24 Dec., 1895

SMITH, ROBERT, c/o Mrs Chisholm, 229 North street, Glasgow, 20 Mar., 1900

SMITH, ROBERT, Burnlea place, Milton of Campsie, 21 Feb., 1905

SMITH, WILLIAM J., 207 Nithsdale road, Pollokshields, Glasgow, 24 Jan., 1899

SNEDDON, RICHARD M., 45c Whifflet street, Coatbridge, G. 21 Nov., 1899 M. 18 Mar., 1902

SNOWBALL, EDWARD, 10 Broomfield terrace, Springburn, Glasgow, 22 Feb., 1870

SOMERVAIL, PETER A., Dalmuir Ironworks, Dalmuir, 25 Jan., 1887

SOMERVILLE, THOMAS A., Federal Life buildings, Hamilton, Ontario, Canada, 22 Feb., 1898

SOTHERN, JOHN W., 59 Bridge street, Glasgow, 29 Oct., 1901

SPALDING, WILLIAM, c/o Cowan, 192 Hyndland road, Partick, G. 25 Oct., 1892 M. 16 Dec., 1902

SPENCE, WILFRID L., 31 St. Vincent place, Glasgow, 28 Apr., 1903

SPROUL, A., Glenairlie, Glasgow road, Paisley, 19 Mar., 1901

STARK, JAMES, 13 Princes gardens, Dowanhill, Glasgow, 27 Oct., 1896

STARK, JAMES, Penang, Straits Settlement, G. 22 Dec., 1891 M. 26 Jan., 1904

†STEPHEN, ALEXANDER E., 8 Princes terrace, Dowanhill, Glasgow, 18 Dec., 1883

†STEPHEN, FREDERICK J., Linthouse, Govan, 30 Apr., 1895

STEPHEN, J. M., 65 Marlborough avenue, Partick, 19 Mar., 1901

*†STEPHEN, JOHN, Linthouse, Govan,

STEVEN, DAVID M., 9 Princes terrace, Dowanhill, Glasgow, G. 15 June, 1898 M. 24 Oct., 1905

STEVEN, JAMES, Eastvale place, Kelvinhaugh, Glasgow, 23 Oct., 1900

STEVEN, JOHN, Eastvale place, Kelvinhaugh, Glasgow, 26 Oct., 1897

STEVEN, JOHN A., 12 Royal crescent, Glasgow, G. 22 Nov., 1881 M. 3 May, 1904

STEVEN, JOHN WILSON, 8 Clarence Drive, Hyndland, Glasgow, 20 Dec., 1898

STEVENS, JOHN, Marsden, Renfrew, 23 Mar., 1897

STEVENSON, WILLIAM F., 49 Park drive, South, Whiteinch, Glasgow, 18 Dec., 1900

STEWART, ALEXANDER W., 55 West Regent street, Glasgow, 23 Jan., 1894

STEWART, CHARLES, 342 Argyle street, Glasgow, 22 Jan., 1907

†STEWART, JAMES, Harbour Engine works, 60 Portman street, Glasgow, 25 Mar., 1890

STEWART, JAMES, Messrs L. Sterne & Co., 155 North Woodside road, Glasgow, 25 Oct., 1898

STEWART, JAMES, 3 Keir street, Pollokshields, Glasgow, 23 Feb., 1904

STEWART, JAMES C., 54 George square, Glasgow, 24 Dec., 1901

STEWART, JOHN GRAHAM, B.Sc., Ault Wharrie, Dunblane, 22 Mar., 1892

STEWART, W. MAXWELL, 55 W. Regent street, Glasgow, 21 Nov., 1899

STIRLING, JOHN, Beechwood villa, Drive road, S. Govan, 21 Nov., 1905

STOTHERT, JOHN KENDALL, 20 Queensborough gardens, Glasgow, W., 19 Dec., 1905

STOTT, EDGAR, 3 West Regent street, Glasgow, 19 Mar., 1907

STRACHAN, ROBERT, 42 Clifford street, Ibrox, Govan, 22 Nov., 1898
STRATHERN, ALEXANDER G., 41 Blairhill street, Coatbridge, 25 Apr., 1899
STUART, JAMES, 94 Hope street, Glasgow, 22 Oct., 1889
STUART, JAMES TAIT, 2 Bowmont terrace, Kelvinside, Glasgow, 18 Dec., 1900
SURTEES, FRANCIS VERE, Messrs Lobnitz & Co., Ltd., Renfrew, 19 Feb., 1901
SUTHERLAND, JOHN, The British Aluminum Coy., Ltd., Greenock, 20 Mar., 1906
SUTHERLAND, SINCLAIR, North British Tube works, Govan, 21 Dec., 1897
SWANN, WILLIAM, Messrs Finlay & Co., Manila, Philippine Islands, 24 Oct., 1905
SYME, JAMES, 8 Glenavon terrace, Partick, 23 Jan., 1877

TAINSH, JOHN, A. G., B.Sc., Messrs Biles, Gray & Co., 175 West George street, Glasgow, 19 Dec., 1905
TAINSH, JOSEPH R., Gorakhpur, United Provinces, India, 23 Oct., 1906
TANNETT, JOHN CROYSDALE, Vulcan works, Paisley, 25 Jan., 1898
TATHAM, STANLEY, Montana, Burton road, Branksome park, Bournemouth, W., { G. 21 Dec., 1880 / M. 15 June, 1898
TAVERNER, H. LACY, 3 Owen mansions, Queen's Club gardens, West Kensington, London, W. 22 Dec., 1896
TAYLOR, BENSON, 21 Thornwood avenue, Partick, 20 Nov., 1900
TAYLOR, JAMES, 3 Westminster terrace, Ibrox, Glasgow, 16 Dec., 1902
TAYLOR, ROBERT, 28 Ardgowan street, Greenock, 27 Oct., 1896
TAYLOR, STAVELEY, Messrs Russell & Company Port-Glasgow, 25 Mar., 1879
TAYLOR, THOMAS, 73 Margues de Camillas, Manila, Phillipine Islands, 29 Oct., 1901
TERANO, Prof. SEIICHI, College of Engineering, Imperial University, Tōkyō, Japan, 21 Feb., 1899
THISTLETHWAITE, JOHN DICKINSON, Mechanical Engineer, Harbours and Rivers Department, Brisbane, Queensland, 28 Apr., 1903
THODE, GEORGE W., Brandes Strasse, 9, Rostock, I.M., Germany, 27 Jan., 1885
THOM, JOHN, 5 Hillington Park crescent, Glasgow, 26 Feb., 1889
THOMPSON, W. B., Thornbank, Dundee, 14 May, 1878
THOMSON, Prof. ARTHUR W., D.Sc., College of Science, Poona, India, 26 Apr., 1887
THOMSON, G. CALDWELL, c/o Messrs Thomas Firth & Sons, Lalamander Steel Works, Riga, Russia, 24 Oct., 1893

THOMSON, GEORGE, 14 Caird drive, Partickhill, Glasgow, 18 Dec., 1883

THOMSON, GEORGE, C., 53 Bedford road, Rockferry, nr. Birkenhead, G. 24 Feb., 1874; M. 22 Oct., 1889

THOMSON, GRAHAME H., 2 Marlborough terrace, Glasgow, G. 22 Feb., 1898; M. 18 Dec., 1903

THOMSON, JOHN, 3 Crown terrace, Dowanhill, Glasgow, 20 May, 1868

THOMSON, R. H. B., Govan Shipbuilding yard, Govan, 26 Feb., 1895

THOMSON, ROBERT, Messrs Barr, Thomson & Co., Ltd., Kilmarnock, 25 Jan., 1898

THOMSON, WILLIAM, 20 Huntly gardens, Kelvinside, Glasgow, G. 23 Dec., 1884; M. 27 Oct., 1896

THOMSON, WILLIAM, Royal Institution Laboratory, Manchester, 17 Feb., 1903

TIDD, E. GEORGE, 68 Gordon street, Glasgow, 22 Oct., 1895

TOD, PETER, c/o Messrs E. H. Williamson & Co., Engineers, Lightbody street, Liverpool, G. 27 Oct., 1885; M. 27 Oct., 1903

TODD, DAVID R., 39-40 Arcade Chambers, St. Mary's Gate and Dean's Gate, Manchester, G. 25 Jan., 1887; M. 25 Oct., 1892

TORRIE, JAMES, 18 Mar., 1902

TRENIUKHINN, VLADIMIR M., Vasilievsky, Ostrov, 15 line, N° F_2, St. Petersburg, 19 Feb., 1907

TULLIS, DAVID K., Kilbowie Iron works, Kilbowie, 23 Nov., 1897

TULLIS, JAMES, Kilbowie Iron works, Kilbowie, 23 Nov., 1897

TURNBULL, ALEXANDER, St. Mungo's works, Bishopbriggs, Glasgow, 21 Nov., 1876

TURNBULL, ALEXANDER POTT, 65 West Regent street, Glasgow, 25 Jan., 1898

TURNBULL, CAMPBELL, 190 West George street, Glasgow, G. 27 Oct., 1891; M. 27 Oct., 1903

TURNBULL, JAMES, 499 City road, Edgbaston, Birmingham, G. 22 Mar., 1892; M. 27 Oct., 1903

TURNBULL, W. L., 190 West George street, Glasgow, G. 27 Oct., 1891; M. 27 Oct., 1903

TURNER, THOMAS, Caledonia works, Kilmarnock, 22 Jan., 1901

VICKERS, FRANK E., 245 St. George's road, Glasgow, 19 Feb., 1907

VOOS, ARMAND, Superintendent Engineer, Chateau de Petaheid, Verviers, Belgium, 1 May, 1906

WADDELL, JAMES, 15 Moray place, Glasgow, 23 Mar., 1897

WALKER, ARCHIBALD, Netherby, Walm Lane, Cricklewood, London, N.W., 26 Nov., 1901

WALKER, JOHN, Hillside, Newlands road, Glasgow, G. 20 Nov., 1894; M. 19 Dec., 1899

WALLACE, DUNCAN M., Dunmar, 87 Roseberry road, Muswell Hill, London, N., 27 Oct., 1896

WALLACE, JAMES LOCH, Fernlea, 18 Rowan road, Dumbreck, Glasgow, 18 Feb., 1902

WALLACE, JOHN, Jun., 1 Compton road, Winchmore Hill, London, N. { G. 26 Jan., 1892 / M. 22 Jan., 1901

WALLACE, PETER, Ailsa Shipbuilding Co., Troon, 23 Jan., 1883

WALLACE, W. H., 25 Carrick road, Ayr, 23 Apr., 1907

WANNOP, CHARLES H., Messrs A. Stephen & Son, Linthouse, Glasgow, { G. 24 Feb., 1885 / M. 22 Mar., 1904

WARD, J. C. A., 121 North Side, Clapham Common, London, S.W., 22 Nov., 1898

WARD, JOHN, Leven Shipyard, Dumbarton, 26 Jan., 1886

WARDE, HENRY W., 69a Waterloo street, Glasgow, 15 June, 1898

WARDEN, WILLOUGHBY C., 68 Gordon street, Glasgow, 24 Mar., 1896

WARNOCK, THOMAS F., 53 M'Lelland drive, Kilmarnock, 23 Jan., 1906

WARNOCK, WILLIAM FINDLAY, 274 Bath street, Glasgow, 21 Jan., 1902

WASLEY, THOMAS J. J., 21 Station road, Coatham, Redcar, Yorks, 20 Mar., 1906

WATKINSON, Prof. W. H., 15 Croxteth road, Liverpool, 19 Dec., 1893

WATSON, JAMES W., 6 Kirklee road, Kelvinside, Glasgow, 17 Feb., 1903

WATSON, JOHN, 9 Woodside crescent, Glasgow, W., { G. 22 Nov., 1898 / M. 25 Oct., 1904

WATSON, WILLIAM, Clyde Shipping Company, Greenock, 24 Nov., 1896

WATSON, WILLIAM P., Turnberry, Bentick drive, Troon, 23 Apr., 1907

WATT, ALEXANDER, Inchcape, Paisley, 25 Jan., 1898

WATT, ROBERT D., 106 Hamilton place, Aberdeen, { G. 27 Apr., 1880 / M. 27 Oct., 1903

WEBB, R. G., Messrs Richardson & Cruddas, Byculla, Bombay, { G. 21 Dec., 1875 / M. 26 Oct., 1886

WEBSTER, JAMES, North British Locomotive Co., Ltd., Atlas works, Springburn, Glasgow, 21 Mar., 1899

WEDDELL, ALEXANDER H., B.Sc., Park villa, Uddingston, { G. 22 Dec., 1896 / M. 16 Dec., 1902

WEDDELL, JAMES, Park villa, Uddingston, 22 Dec., 1896

WEDGWOOD, A., Dennystown Forge, Dumbarton, 18 Dec., 1900

WEDGWOOD, ARTHUR D., Forgemaster, Dumbarton, 26 Jan., 1897

WEIGHTON, Prof. R. L., M.A., 2 Park villas, Gosforth, Newcastle-on-Tyne, { G. 17 Dec., 1878 / M. 22 Nov., 1887

†WEIR, GEORGE, Yass, near Sydney, New South Wales, 22 Dec., 1874

†WEIR, JAMES, Holmwood, 72 St. Andrew's drive, Pollokshields, Glasgow, 22 Dec., 1874

WEIR, JOHN, 46 Lawrence street, Partick, { G. 22 Apr., 1884 / M. 26 Nov., 1895

†WEIR, THOMAS, China Merchants' Steam Navigation Co., Marine Superintendent's Office, Shanghai, China, 23 Apr., 1889

WEIR, THOMAS D., Messrs Brown, Mair, Gemmill & Hyslop, 162 St. Vincent street, Glasgow, G. 19 Dec., 1876 M. 26 Feb., 1884

WEIR, WILLIAM, Holm foundry, Cathcart, Glasgow, G. 28 Jan., 1896 M. 22 Nov., 1898

WEIR, WILLIAM, 231 Elliot street, Glasgow, 22 Jan., 1901

WELCH, ARCHIBALD, Clune bank, Port-Glasgow, 21 Feb., 1905

WELSH, JAMES, 3 Princes gardens, Dowanhill, Glasgow, G. 24 Nov., 1885 M. 26 Oct., 1897

WEMYSS, GEORGE B., 57 Elliot street, Hillhead, Glasgow, G. 28 Nov., 1882 M. 22 Jan., 1901

WHITE, RICHARD S., Shirley, Jesmond, Newcastle-on-Tyne, 20 Feb., 1883

WHITEHEAD, ALEXANDER CULLEN, c/o Messrs Whitehead Bros., Engineers, P.O., Box 2786, Johannesburg, S.A., 27 Oct., 1903

WHITEHEAD, JAMES, Howford, Mansewood, Pollokshaws, Glasgow, 6 Apr., 1887

WILLCOX, REGINALD, J. N., Messrs Fleming & Ferguson, Ltd., Paisley, 28 Apr., 1903

WILLIAMS, LLEWELLYN WYNN, B.Sc., Cathcart, Glasgow, 22 Feb., 1898

WILLIAMS, OWEN R., B.Sc., Railway Appliance works, Cathcart, Glasgow, 20 Nov., 1900

WILLIAMS, WILLIAM, Lysistrata, 14 Champs Elysees, Paris, 23 Jan., 1900

WILLIAMSON, ALEXANDER, 67 Esplanade, Greenock, 21 Mar., 1899

WILLIAMSON, Sir JAMES, C.B., 27 Cedar road, Clapham Common, London, S.W., 23 Dec., 1884

WILLIAMSON, JAMES, Marine Superintendent, Gourock, 24 Mar., 1896

WILLIAMSON, ROBERT, Ormidale, Malpas, near Newport, Mon., 20 Feb., 1883

WILSON, ALEXANDER, City Chambers, Glasgow, 28 Jan., 1896

WILSON, ALEXANDER, Hyde Park Foundry, Finnieston street, Glasgow, 23 Feb., 1897

WILSON, ALEXANDER HALL, B.Sc., Messrs Hall, Russell, & Co., Aberdeen, 23 Oct., 1900

WILSON, DAVID, Arecibo, Porto Rico, West Indies, 25 Oct., 1887

WILSON, GAVIN, 107 Pollok street, Glasgow, 22 Oct., 1889

WILSON, JOHN, The Worthington Pump Co., Ltd., 45 Hope street, Glasgow, 24 Dec., 1895

WILSON, JOHN, 39 Alexandra Park street, Dennistoun, Glasgow, 22 Dec., 1903

WILSON, SAMUEL, 39 Camphill avenue, Langside, Glasgow, 3 Mar., 1903

WILSON, W. H., 261 Albert road, Pollokshields, Glasgow, 22 Feb., 1898

WILSON, WILLIAM CHEETHAM, 122 Balgray hill, Springburn, Glasgow, 24 Nov., 1903

WILSON, WILLIAM J., Lilybank Boiler works, London road, Glasgow, 30 Apr., 1895

WINNING, WILFRED LAWSON, 51 Mains loan, Maryfield, Dundee, 21 Nov., 1905

WOOD, ROBERT C., c/o Messrs A. Rodger & Co., Shipbuilders, Port Glasgow, 23 Mar., 1897

WRAY, WILLIAM J. R., 175 West George street, Glasgow, 19 Dec., 1905

WRENCH, WILLIAM G., 27 Oswald street, Glasgow, 25 Mar., 1890

WRIGHT, ROBERT, Lloyd's Register of Shipping, 342 Argyle street, Glasgow, 22 Dec., 1896

WRIGHT, ROBERT, 3 Sir John Rogerson's quay, Dublin, 23 Jan., 1906

WYLIE, ALEXNADER WILLIAMSON, Vulcan works, Johnstone, 23 Oct., 1906

WYLLIE, JAMES BROWN, Messrs Wyllie & Blake, 219 St. Vincent street, Glasgow, { G. 25 Oct., 1887 / M. 26 Jan., 1897

YARDLEY, ROBERT WILLIAM, Heysham Tower, Heysham, near Morecambe, 22 Mar., 1904

†YARROW, HAROLD E., Fairlawn, Bearsden, 23 Apr., 1907

YOUNG, DAVID HILL, Kilkerran, Newlands road, Newlands, Glasgow, { G. 20 Nov., 1900 / M. 15 Apr., 1902

YOUNG, THOMAS, Rowington, Whittingehame drive, Kelvinside, Glasgow, 20 Mar., 1894

YOUNG, WILLIAM ANDREW, Netherhill, Renfrew road, Paisley, 26 Mar., 1895

YOUNGER, A. SCOTT, B.Sc, 141 Fenchurch street, London, E.C. 24 Nov., 1896

ASSOCIATE MEMBERS.

ADAM, JOHN WILLIAM, Ferguslie villa, Paisley, 28 Apr., 1903

AGNEW, WILLIAM H., Messrs Cammell, Laird & Co., Birkenhead, G. 28 Nov., 1882; A.M. 27 Oct., 1903

AINSLIE, JAMES WILLIAM, 28 Ancaster drive, Anniesland, Glasgow, G. 26 Nov., 1901; A.M. 28 Apr., 1903

ALLAN, JAMES, 326 West Princes street, Glasgow, G. 24 Jan., 1888; A.M. 2 May, 1905

ANDERSON, DAVID, B.Sc., 21 Portland road, Holland Park avenue, London, W., 20 Dec., 1904

ANDERSON, JAMES, 9 Glasgow street, Hillhead, Glasgow, A. 24 Apr., 1900; A.M. 17 Feb., 1903

ANDERSON, THOMAS, c/o M'Queen, 7 Grantly street, Shawlands, Glasgow, G. 29 Oct., 1901; A.M. 28 Apr., 1903

ARBUTHNOTT, DONALD S., Ardlinnbe, Nairn, N.B. G. 23 Oct., 1888; A.M. 27 Oct., 1903

ARDILL, WILLIAM, Blackwall Iron works, Isle of Dogs, London, E., 17 Feb., 1903

ARUNDEL, ARTHUR S. D., Penn street works, Hoxton, London, N., G. 23 Dec., 1890; A.M. 27 Oct., 1903

BADDELEY, DOUGLAS STEPHENSON, 50 Wellington street, Glasgow, 19 Mar., 1907

BAIRD, THOMAS H., 12 Berkeley terrace, Glasgow, 21 Nov., 1905

BALLANTYNE, HUGH D., Rose cottage, Kilbirnie, 24 Oct., 1905

BARBOUR, JAMES CLINKSKILL, 3 Marden road, Whitley Bay, Northumberland, 24 Jan., 1905

BARNWELL, FRANK S., Elcho house, Balfron, S. 18 Feb., 1902; A.M. 23 Jan., 1906

BARNWELL, RICHARD H., Elcho house, Balfron, S. 18 Feb., 1902; A.M. 23 Jan., 1906

BENNETT, DUNCAN, c/o M'Auslan, 61 Clifford street, Ibrox, Glasgow, G. 26 Oct., 1897; A.M. 27 Oct., 1903

BERG, WILLIAM E. G., Bergshof, Hilversum, Holland, S. 24 Oct., 1905; A.M. 18 Dec., 1906

BERRY, DAVIDSON, 4 Newlands park, Newlands, Glasgow, G. 19 Mar., 1901; A.M. 27 Oct., 1903

BLACK, JOHN C., 34 Clyde street, Dumbarton, 23 Oct., 1906

BLAIR, ARCHIBALD, 25 Peel street, Partick, G. 27 Oct., 1891; A.M. 3 May, 1904

BOYD, JAMES, c/o The Borneo Coy., Ltd., Ban, Sarawak, Dutch Borneo, 22 Mar., 1904

BROOM, WILLIAM A., M.A., Rothmar, Campbeltown, { S. 20 Dec., 1904 / A.M. 18 Dec., 1906

BROWN, WILLIAM, 19 Montrose gardens, Milngavie, nr. Glasgow, { G. 26 Nov., 1901 / A.M. 21 Apr., 1903

BROWNLIE, MATTHEW, Meadowpark, Strathaven, 21 Nov., 1905

BUCHANAN, GEORGE HAMILTON, 1 Wellfield terrace, Springburn, Glasgow, 19 Dec., 1905

BUCHANAN, WALTER G., 17 Sandyford place, Glasgow, { G. 27 Jan., 1891 / A.M. 28 Apr., 1900

BUCKLE, JOSEPH, 30 Dumbarton road, Ferry road head, Yoker, Glasgow, { S. 31 Oct., 1902 / A.M. 28 Apr., 1903

BUTLER, JAMES S., Hillview, Milngavie, nr. Glasgow, { G. 22 June, 1901 / A.M. 3 May, 1904

CALDWELL, JAMES, 6 Clydeview, Partick, 20 Mar., 1906

CAMERON, ANGUS J., 17 Richmond road, Exeter, { G. 20 Nov., 1900 / A.M. 2 May, 1905

CAMERON, JOHN, 29 White street, Partickhill, Glasgow, 21 Nov., 1905

CLEGHORN, GEORGE, 2 Clelland place, Ibrox, Govan, 27 Oct., 1903

COCHRAN, ALEXANDER, Messrs Burns & Co., Ltd., Howrah, Calcutta, 3 Mar., 1903

COLEMAN, HENRY CHARLES, Isaac Peral 25, Cadiz, Spain, 3 May, 1904

COLVILLE, ARTHUR JOHN, 14 Newton place, Glasgow, 20 Nov., 1906

COOK, ROBERT TEMPLETON, Greenvale, Ardbeg, Rothesay, N.B., 25 Oct., 1904

CRAIG, JAMES, B.Sc., Netherlea, Partick, { G. 22 Feb., 1839 / A.M. 28 Apr., 1903

CRAWFORD, JOHN DOUGLAS, 64 Love street, Paisley, 20 Mar., 1906

CUMMING, FINDLAY M., 4 Smithhills, Paisley, 23 Jan., 1906

DAWSON, JAMES W., c/o Landale, 3 Kirkwood street, Ibrox, Glasgow, 22 Jan., 1907

DEKKE, K. S., Bergen, Norway, { G. 22 Dec., 1891 / A.M. 27 Oct., 1903

DIACK, JAMES A., Enoshima, Woodburn road, Newlands, Glasgow, { G. 22 Jan., 1895 / A.M. 27 Oct., 1903

DICKIE, JAMES BLACK, B.Sc., 33 Ardgowan street, Greenock, 20 Dec., 1904

DOBBIE ROBERT BROWN, 15 Leander road, Brixton Hill, London, S.W., { S. 24 Oct., 1899 / A.M. 17 Apr., 1906

DRYSDALE, HUGH R. S., 24 Kilmailing terrace, Cathcart, Glasgow, 17 Feb., 1903

EDMISTON, ALEXANDER A., Ibrox house, Govan, { G. 22 Feb., 1898 / A.M. 27 Oct., 1903

ELLIOTT, SIMPSON, 9 Leslie street, Pollokshields, Glasgow, 19 Dec., 1905

FALLON, ADFRED H., c/o Mrs G. Brook, 2 Richmond villa, Cambridge road, East Cowes, I. of W., 17 Feb., 1903

FAUT, ALEXANDER, 48 Jane street, Glasgow, G. 19 Dec., 1899; A.M. 21 Apr., 1903

FERGUS, ALEXANDER, Homeslea, Crookston, Paisley, G. 22 Dec., 1891; A.M. 3 May, 1904

FERGUS, FRED. SMEATON, 52 Lawrence street, Partick, 20 Feb., 1906

FERGUSON, DANIEL, 27 Oswald street, Glasgow, 27 Oct., 1903

FERNANDEZ, JUAN BAUTISTA, Cebu Drydock Co., Opon, Mactan, Philippine Islands, 18 Dec., 1906

FERNIE, JOHN, 26 Montgomerie road, Scotstoun, Glasgow, S. 31 Oct., 1902; A.M. 28 Apr., 1903

FINDLATER, JAMES, 124 Pollok street, Glasgow, S.S., G. 19 Dec., 1899; A.M. 23 Feb., 1904

FINDLAY, EDWYN ALFRED, 5 Cranworth street, Hillhead, Glasgow, 25 Oct., 1904

FLETCHER, WILLIAM DAWSON, 11-15 East Vermont street, Kinning Park, Glasgow, 23 May, 1905

FOULIS, WILLIAM, 2 Montgomerie quadrant, Kelvinside, Glasgow, 21 Nov., 1905

FRANCE, JAMES, 8 Hanover terrace, Kelvinside, Glasgow, G. 26 Oct., 1897; A.M. 27 Oct., 1903

FROST, EVELYN F. M., 21 Burnbank gardens, Glasgow, S. 31 Oct., 1902; A.M. 28 Apr., 1903

GALLACHER, PATRICK, 72 Fulbar street, Renfrew, 21 Apr., 1903

GILCHRIST, JAMES, B.Sc., 26 Apr., 1904

GILMOUR, ANDREW, 34 Hamilton terrace, Hamilton, West, G. 20 Dec., 1898; A.M. 2 May, 1905

GRANT, WILLIAM, 40 Keppel road, Chorlton-cum-Hardy, Manchester, S. 24 Oct., 1899; A.M. 1 May, 1906

GRAY, ROBERT, 88 Lennox street, Possilpark, Glasgow, 17 Apr., 1906

GREY, WALTER E., 55 Clifford street, Ibrox, Glasgow, 19 Feb., 1907

GRIEVE, JOHN, 23 Jan., 1906

GUTHRIE, WILLIAM ORROK, 4 Crown Circus road, Glasgow, W., 21 Nov., 1905

HAY, JAMES, Devon bank, High Crosshill, Rutherglen, 20 Dec., 1904

HERON, JOHN MURDOCH, 4 Merchiston avenue, Edinburgh, 21 Nov., 1905

HOGARTH, ALEXANDER, 1 Tantallon terrace, Ibrox, Glasgow, 21 Nov., 1905

HOLLAND, JOHN C., Reitspruit, 668 Vereeinging, Transvaal, S. 20 Dec., 1904; A.M. 23 Oct., 1906

HOLMES, JAMES, c/o Robertson, 25 St. James street, Paisley, S. 17 Feb., 1903; A.M. 24 Oct., 1905

HORN, PETER ALLAN, 29 Regent Moray street, Glasgow G. 26 Oct., 1897; A.M. 27 Oct., 1903

HUTCHEON, ALEXANDER, 5 Bentinck street, Glasgow, W., 20 Dec., 1904

HUTCHISON, ROBERT, 76 Kenmure street, Pollokshields, Glasgow, G. 24 Oct., 1899; A.M. 27 Oct., 1903

I'ANSON, JOSEPH, 83 Hyndland street, Partick, 23 Jan., 1906

IRVINE, ARCHIBALD B., 5 Strathallan terrace, Dowanhill, Glasgow, G. 20 Nov., 1894; A.M. 27 Oct., 1903

JOHNSON, HERBERT AUGUST, 41 James street, Holderness road, Hull, 22 Mar., 1904

JOHNSTONE, ALEXANDER C., 307 Ruchill street, Ruchill, Glasgow, G. 25 Jan., 1898; A.M. 27 Oct., 1903

JOHNSTONE, JOHN GAVIN, B.Sc., 11 Maxwell terrace, Pollokshields, Glasgow, 22 Dec., 1903

JOHNSTONE, ROBERT, Sala de Desenho, Arsenal da Mavinha, Lisbon, G. 26 Apr., 1898; A.M. 27 Oct., 1903

JONES, T. C., 17 Kent Avenue, Jordanhill, Glasgow, G. 23 Nov., 1897; A.M. 27 Oct., 1903

KAWAHARA, GORO, Mitsu-Bishi Dockyard, Nagasaki, Japan, 18 Dec., 1906

KIRK, JOHN, Herbertshire, Riccartsbar avenue, Paisley, G. 20 Nov., 1894; A.M. 28 Apr., 1903

KNOX, ALEXANDER, 10 Westbank terrace, Hillhead, Glasgow, G. 23 Nov., 1897; A.M. 22 Dec., 1903

KONDO, SHIGEYA, Japanese Consulate, 34 West George street, Glasgow, 22 Jan., 1907

LAIRD, ALEXANDER, 172 Pitt street, Glasgow, 24 Oct., 1905

LAMB, STUART D. R., Contractor's Office, Camden house, Southwick, Sunderland, G. 23 Jan., 1900; A.M. 23 Feb., 1904

LANE, FRANK C., The Customs Service of the Philippine Islands, Iloilo, 24 Oct., 1905

LANG, HUGH MONTGOMERIE, High Parish Manse, Paisley, 19 Mar., 1907

LEARMONTH, ROBERT, c/o Indiana Steel Co., Drawing Room, Gary, Ind., U.S.A., G. 26 Nov., 1901; A.M. 21 Apr., 1903

LEE, JOHN, Dunton house, Thorpe road, Peterborough, {G. 26 Jan., 1886 / A.M. 21 Apr., 1903}

LITTLE, JOHN PATERSON, Annandale, Riverside road, Newlands, Glasgow, 24 Oct., 1905

LITTLE, SIMON MURE, 32 Sutherland ter., Glasgow, W., 24 Jan., 1905

LOUDON, JAMES MAY, 22 Clarendon street, Glasgow, {A. 21 Jan., 1902 / A.M. 2 May 1905}

LOWE, JAMES, c/o Wilson, 92 Langside avenue, Langside, Glasgow, {G. 24 Oct., 1899 / A.M. 23 Feb., 1904}

LYNN, ROBERT R., 7 Highburgh terrace, Dowanhill, Glasgow, 20 Jan., 1903

LYONS, LEWIS JAMES, 119, 33rd street, Newport-News, Virginia, U.S.A. 23 Feb., 1904

MCCOLL, JOHN, 51 Gardner street, Partick, 19 Feb., 1907

MCCULLOCH, JOHN, 49 Arlington street, Glasgow, {G. 23 Oct., 1900 / A.M. 3 May, 1904}

MCEWAN, JOHN, 3 Norse road, Scotstoun, Glasgow, {G. 26 Oct., 1887 / A.M. 28 Apr., 1903}

MCFARLANE, DUNCAN A., 9 Dunolly gardens, Ibrox, Glasgow, 21 Nov., 1905

MACFARLANE, ARCHIBALD, 2 Glenavon terrace, Partick, 22 Jan., 1907

MCGILVRAY, JOHN A., 555 Govan road, Govan, {G. 26 Oct., 1897 / A.M. 27 Oct., 1903}

MCHARDY, WALLACE BRUCE, Flakedale, Hamilton, 21 Nov., 1905

MCINTYRE, JAMES N., 33 Hayburn crescent, Partick, {G. 20 Nov., 1900 / A.M. 27 Oct., 1903}

MCIVOR, JOHN, Moss cottage, Nitshill, Glasgow, 3 Mar., 1903

MCKENZIE, WILLIAM JOHN, 5 Westbourne drive, Ibrox, Glasgow, 21 Feb., 1905

MCMILLAN, THOMAS, 5 Balgray Hill, Springburn, Glasgow, 19 Dec., 1905

MACKIE, JAMES, 371 Bath street, Glasgow, {G. 23 Mar., 1897 / A.M. 28 Apr., 1903}

MACKINTOSH, R. D., P.O. Box 6075, Johannesburg, South Africa, {G. 20 Nov., 1893 / A.M. 27 Oct., 1904}

MCSKIMMING, CHARLES SCOTT, 14 Miller street, Hamilton, 18 Dec., 1906

MCVAY, JOSEPH A., Lighthouse Service, U.S.S., "Corrigidor," Cebu, Philippine Islands, 23 Apr., 1907

MALCOLM, WILLIAM, 34 Thornwood avenue, Partick, {S. 24 Oct., 1905 / A.M. 22 Jan., 1907}

MANNERS, EDWIN, 21 Leslie street, Pollokshields, Glasgow, 17 Feb., 1903

MARSHALL, JAMES EADIE, 18 Partick street, Greenock, 19 Dec., 1905

MARTIN, GEORGE HOWE. c/o Macfarlane, Strathend house, Strathleven place, Dumbarton, 24 Oct., 1905

MARTIN, JAMES, Engine Drawing Office, Hong Kong & Whampoo Dock Co., Hong Kong, 20 Dec., 1905

MAY, ANDREW, Woodbourne, Partickhill, Glasgow, S. 20 Dec., 1904; A.M. 23 Oct., 1906

MEEK, WILLIAM M'CARTER, 21 Thornwood avenue, Partick, 25 Oct., 1904

MELENCOVICH, ALEXANDRE, c/o Messrs Yarrow & Co., Poplar, London, E., S. 31 Oct., 1902; A.M. 22 Nov., 1904

MENZIES, GEORGE, 20 St. Vincent crescent, Glasgow, G. 22 Jan., 1889; A.M. 24 Nov., 1903

MILLAR, JOHN SIMPSON, 55 Gardner street, Partick, G. 20 Nov., 1894; A.M. 22 Dec., 1903

MILLAR, WILLIAM PETTIGREW, 29 Brownlie gardens, Tollcross, Glasgow, G. 18 Dec., 1900; A.M. 17 Feb. 1903

MILLER, JAMES W., 84 Portland place, London, W., G. 20 Dec., 1898; A.M. 2 May, 1905

MILLER, LOUIS M., 69 Danes drive, Scotstoun, Glasgow, 22 Jan., 1907

MITCHELL, ALEXANDER ROBERTSON, 375 Glasgow road, Clydebank, 24 Nov., 1903

MORGAN, ANDREW, 64 Wellington street, East, Higher Broughton, Manchester, G. 18 Dec., 1900; A.M. 22 Dec., 1903

MORISON, WILLIAM McA., 29 Waterloo street, Glasgow, 20 Nov., 1906

MORLEY, THOMAS B., B.Sc., 2 Tantallon terrace, Ibrox, Glasgow, S. 27 Oct., 1903; A.M. 20 Nov., 1906

MORRISON, A., Alt-na-craig, Greenock, G. 23 Nov., 1897; A.M. 3 May, 1904

MUIR, ANDREW A., 189 Renfrew street, Glasgow, G. 22 Nov., 1898; A.M. 23 Feb., 1904

NOWERY, W. F., c/o Jack, 71 Grant street, Glasgow, G. 21 Dec., 1897; A.M. 28 Apr., 1903

OLIVER, GORDON BERNARD, St. Martin's, Whittingehame drive, Glasgow, 23 Jan., 1906

OLSEN, HAROLD MARTIN, c/o Brown, 44 Brisbane street, Greenock, S. 19 Dec., 1905; A.M. 18 Dec., 1906

PATERSON, GEORGE, 27 White street, Partick, 21 Nov., 1905

PATTERSON, DAVID F., 2 St. James' terrace, Hillhead, Glasgow, 20 Nov., 1906

POLLOCK, GILBERT F., G. 27 Jan., 1895; A.M. 2 May, 1901

RALSTON, SHIBLEY BROOKS, 39 Bentinck street, Glasgow, W., { G. 23 Feb., 1897 / A.M. 23 Feb., 1904

RANKEN, JOHN, Benhar, Broadloan, Renfrew, 24 Oct., 1905

RIDDLESWORTH, W. HENRY, M.Sc., 63 Polworth gardens, Partickhill, Glasgow, { G. 24 Oct., 1899 / A.M. 28 Apr., 1903

ROBERTS, WILLIAM MIRRLEES, 6 Glenview terrace, Greenock, 20 Feb., 1906

ROBERTSON, ALFRED, J. C., 591 St. Catherine street, West, Montreal, Canada, 16 Dec., 1902

ROBERTSON, JOHN, Jun., 7 Maxwell terrace, Shields road, Pollokshields, Glasgow, 20 Jan., 1903

ROBERTSON, ROBERT MCKENZIE, 26 M'Lelland drive, Kilmarnock, { S. 15 Apr., 1902 / A.M. 19 Mar., 1907

ROBINSON, LESLIE H., c/o Petrie, 1 Dunolly gardens, Ibrox, Glasgow, 19 Feb., 1907

ROSS, JOHN RICHMOND, Messrs Balfour, Lyon & Co., Valparaiso, { G. 25 Oct., 1898 / A.M. 26 Jan., 1904

ROSS, THOMAS C., 13 Hampden terrace, Mount Florida, Glasgow, { S. 21 Apr., 1903 / A.M. 2 May, 1905

RUSSELL, JOHN, Mansefield, Orchard street, Motherwell, 21 Feb., 1905

SANGUINETTI, W. ROGER, c/o H. S. Scott, Esq., Burnside, Largs, { G. 20 Feb., 1900 / A.M. 2 May, 1905

SAUL, GEORGE, Yloilo Engineering works, Yloilo, Philippine Islands, 21 Apr., 1903

SEMPLE, ROBERT, Jun., Coral Bank, Bertrohill road, Shettleston, 23 Apr., 1907

SERVICE, WILLIAM, 173 West Graham street, Glasgow, { S. 26 Nov., 1901 / A.M. 20 Mar., 1906

SHARPE, WILLIAM H., B.Sc., Engineer's Office, Natal Government Railway, Pietermaritzburg, Natal, { G. 24 Dec., 1895 / A.M. 24 Oct., 1905

SHEARER, JAMES, 30 McCulloch street, Pollokshields, Glasgow, 3 Mar., 1903

SLOAN, JOHN ALEXANDER, 37 Annette street, Crosshill, Glasgow, { G. 25 Jan., 1898 / A.M. 25 Oct., 1904

SMITH, JAMES, 4 Clydeview, Partick, Glasgow, { G. 18 Dec., 1900 / A.M. 28 Apr., 1903

SMITH, JAMES, 23 Barrington drive, Glasgow, { G. 20 Dec., 1892 / A.M. 27 Oct., 1903

SIMPSON, ADAM, 12 Rupert street, Glasgow, { S. 3 May, 1904 / A.M. 19 Dec., 1905

SPEAKMAN, EDWARD M., The Parsons' Foreign Patents Co., Ltd., Capel House, 62 New Broad street, London, E.C., 16 Dec., 1902

SPERRY, AUSTIN, 131 Main street, San Francisco, Cal., U.S.A., { G. 23 Mar., 1897 / A.M. 22 Mar., 1904

STEELE, DAVID J., Davaar, 41 Albert drive, Pollokshields, Glasgow, — G. 20 Dec., 1898; A.M. 27 Oct., 1903

STEELE, JOHN P., 2 Glenavon terrace, Partick, — 22 Jan., 1907

STEPHEN, DAVID BELFORD, 19 Aitken street, Alexandra Park, Glasgow, — 24 Nov., 1903

STEVENS, THOMAS, 55 Ferry road, Renfrew, — 21 Apr., 1903

STEVENSON, GEORGE, c/o The British Thomson-Houston Co., Ltd., 91 Wellington street, Glasgow, — G. 24 Apr., 1900; A.M. 25 Oct., 1904

STEWART, ALEX. WALKER, 41 Comelybank avenue, Edinburgh, — 21 Nov., 1905

STIRLING, ANDREW, 3 Greenvale terrace, Dumbarton, — G. 21 Dec., 1875; A.M. 22 Dec., 1903

STIRLING, WILLIAM, c/o Allan, 1159 Argyle street, Glasgow, — 25 Oct., 1904

STOBIE, PETER, 40 Derby street, Sandyford, Glasgow, — S. 31 Oct., 1902; A.M. 28 Apr., 1903

STOTT, JOHN, 103 Stevenson drive, Shawlands, Glasgow, — 21 Nov., 1905

SYMINGTON, JAMES R., Broomieknowe, Kilmacolm, — G. 21 Dec., 1886; A.M. 26 Jan., 1904

TAYLOR, J. F., 23 Roslea drive, Dennistoun, Glasgow, — G. 23 Nov., 1897; A.M. 27 Oct., 1903

THOMSON, JAMES, Jun., 2 Glenavon terrace, Partick, — 21 Nov., 1905

TILLOTSON, FRANK, c/o Messrs Vickers, Sons & Maxim, 32 Victoria street, London, S.W., — 21 Nov., 1905

TODD, JOSEPH, 47 Camperdown road, Scotstoun, Glasgow, — 23 Jan., 1906

TOSTEE, EVENOR, (Fils) Forges et Fonderie de Providence, Flacq, Mauritius, — 26 Jan., 1904

URE, SEBASTIAN, G. M., 514 St. Vincent street, Glasgow, — 22 Dec., 1903

WALKER, JOHN P. S., Laurel Bank, Uddingston, — 22 Jan., 1907

WARD, GEORGE K., Garmoyle, Dumbarton, — G. 23 Apr., 1901; A.M. 24 Oct., 1905

WARD, JOHN, Jun., Garmoyle, Dumbarton, — G. 23 Apr., 1901; A.M. 24 Oct., 1905

WARNEFORD, JOHN R. K., 9 Marchmont terrace, Glasgow, W., — 18 Dec., 1906

WELSH, GEORGE MUIR, 3 Princes gardens, Dowanhill, Glasgow, — G. 21 Dec., 1897; A.M. 28 Apr., 1903

WHITELAW, ANDREW H., B.Sc., 326 West Princes street, Glasgow, — G. 20 Nov., 1900; A.M. 27 Oct., 1903

WILLIAMSON, ALEX., B.Sc., Cyclops Steel & Iron works, Sheffield, — G. 20 Nov., 1900; A.M. 20 Dec., 1904

WOODS, JOSEPH, 87 Grosvenor Road, Ilford, Essex, {G. 25 Feb., 1896 / A.M. 27 Oct., 1903

WOODSIDE, HUGH R., Artnox, Dalry, Ayrshire, 16 Dec., 1902

WYLIE, WILLIAM, c/o Hunter, 15 Partickhill road, Glasgow, 23 Oct., 1906

YAMUKAWA, KÜCHIRO, 8 Sutherland drive, Hillhead, Glasgow, 21 Nov., 1905

YOUNG, JOHN, Jun., c/o Messrs Wallsend Slipway and Engineering Co., Ltd., Wallsend-on-Tyne, {G. 23 Nov., 1897 / A.M. 2 May, 1905

ASSOCIATES.

ADDIE, FRANK R., 8 Westbourne gardens, Kelvinside, Glasgow, 18 Dec., 1900
ALLAN, HENRY, 25 Bothwell street, Glasgow, 23 Jan., 1900
†ALLAN, JAMES A., 25 Bothwell street, Glasgow, 29 Oct., 1901
ARMOUR, WILLIAM NICOL, 40 West Nile street, Glasgow, 24 Nov., 1896

BAIRD, ALFRED W., 9Whittingehame drive, Kelvinside, Glasgow, 19 Feb., 1907
BEGG, WILLIAM, 34 Belmont gardens, Glasgow, 19 Dec., 1886
BLAIR, HERBERT J., 30 Gordon street, Glasgow, 23 Feb., 1897
BOWLES, Lieutenant GEOFFREY TATTON, R.N., 25 Lowndes square, London, S.W., 25 Oct., 1904
BOWMAN, FREDERICK GEORGE, 21 Kersland terrace, Hillhead, Glasgow, 22 Mar., 1904
BRECKNELL, GEORGE W., 79 West Regent street, Glasgow, 21 Feb., 1905
BROWN, Capt. A. R., 34 West George street, Glasgow, 21 Dec., 1897
BROWN, THOMAS J., 233 St. Vincent street, Glasgow, 29 Oct., 1901
BUCHANAN, JAMES, Dalziel Bridge works, Motherwell, 26 Nov., 1901

CAMERON, JOHN, 8 Osborne Villas, Cathcart, Glasgow, 23 Oct., 1906
CAYZER, Sir CHARLES W., Bart., Gartmore, Perthshire, 27 Oct., 1903
CHRISTIE, WILLIAM, 4 Westminster gardens, Hillhead, Glasgow, 18 Apr., 1905
CLARK, ROBERT, 21 Bothwell street, Glasgow, 23 Feb., 1904
CLAUSSEN, A. L., 118 Broomielaw, Glasgow, 22 Jan., 1892
CLYDE, WALTER P., Messrs Dobbie, M'Innes, Ltd., 45 Bothwell street, Glasgow, 24 Oct., 1899
CRAIGIE, JOHN, 18 Kenwyn road, West Wimbledon, London, S.W., 25 Oct., 1904

DAWSON, DAVID C., 12 York street, Glasgow, 27 Oct., 1903
DEWAR, JAMES, 176 Kent road, Glasgow, 22 Dec., 1897
DODDRELL, EDWARD E., 11 Bothwell street, Glasgow, 26 Oct., 1897

Names marked thus † are Life Associates.

DONALD, JAMES, J.P., 123 Hope street, Glasgow, 19 Dec., 1899

FARNELL, JOHN A., 11 Charing Cross mansions, Glasgow, 21 Feb., 1905
FERGUSON, PETER, Croft-en-Righ, Renfrew, 27 Apr., 1897
FINDLAY, JAMES, 160 Hope street, Glasgow, 23 Oct., 1906
FORREST, WILLIAM, 23 Darnley gardens, Shawmoss road, Pollokshields, Glasgow, 19 Feb., 1901

GARDINER, FREDERICK CROMBIE, 24 St. Vincent place, Glasgow, 20 Feb., 1900
GARDINER, WILLIAM GUTHRIE, 24 St. Vincent place, Glasgow, 20 Feb., 1900
GOVAN, WILLIAM, Belhaven, Milngavie, 21 Feb., 1905
GRAHAM, The Most Honourable The Marquis of, C.B., C.V.O., Easton park, Wickham Market, Suffolk, 22 Mar., 1904

HAMILTON, DAVID JOHN, 9 Princes gardens, Glasgow, W., 2 May, 1905
HENDERSON, JOHN B., Messrs John Brown & Co., Ltd., Clydebank, 22 Mar., 1904
HOLLIS, JOHN, c/o Messrs John Brown & Co., Ltd., 144 St. Vincent street, Glasgow, 23 Nov., 1897
HOPE, ANDREW, 50 Wellington street, Glasgow, 27 Oct., 1903

INVERCLYDE, The Right Honourable Lord, 30 Jamaica street, Glasgow, 23 Oct., 1900

KIRSOP, JAMES NIXON, 79 St. George's place, Glasgow, 29 Oct., 1901

M'ARA, ALEXANDER, 65 Morrison street, Glasgow, 22 Nov., 1892
MACBETH, GEORGE ALEXANDER, 65 Great Clyde street, Glasgow, 24 Jan., 1899
MACBRAYNE, DAVID HOPE, 119 Hope street, Glasgow, 22 Mar., 1904
MACBRAYNE, LAURENCE, 11 Park Circus place, Glasgow, 26 Mar., 1895
MACDOUGALL, DUGALD, 1 Cross-shore street, Greenock, 26 Jan., 1897
MCGEOCH, LAUCHLAN A., 17 Kirklee road, Kelvinside, Glasgow, 18 Dec., 1906
M'INTYRE, T. W., Kirkmichael house, Maybole, Ayrshire, 24 Jan., 1893

MACLAY, JOSEPH P., 21 Bothwell street, Glasgow, 18 Dec., 1900
MCMILLAN, ALEXANDER, 25 Broomhill terrace, Partick, 22 Jan., 1907
M'PHERSON, Captain DUNCAN, Mavisbank, Gourock, 26 Jan., 1886
MERCER, JAMES B., Broughton Copper works, Manchester, 24 Mar., 1874
MOWBRAY, ARCHIBALD H., Sutherland house, Stirling, 22 Feb., 1898

OVERTOUN, The Right Hon. Lord, Overtoun, Dumbartonshire, 27 Oct., 1903

PAUL, ROBERT, 82 Gordon street, Glasgow, 18 Apr., 1905
PAIRMAN, THOMAS, Auld manse, Busby, 23 Jan., 1900
PRENTICE, THOMAS, 175 West George street, Glasgow, 24 Nov., 1896

RAEBURN, WILLIAM HANNAY, 81 St. Vincent street, Glasgow, 20 Feb., 1900
REID, JOHN, 30 Gordon street, Glasgow, 22 Dec., 1896
REID, WILLIAM, 109 Hope street, Glasgow. 23 Jan., 1906
RIDDLE, JOHN C., c/o Messrs Walker & Hall, 8 Gordon street, Glasgow, 15 June, 1898
ROBERTSON, WILLIAM, 27 Apr., 1897
ROBINSON, DAVID, Hilbre, Balshagray avenue, Partick, 16 Dec., 1902
ROXBURGH, JOHN ARCHIBALD, 3 Royal Exchange square, Glasgow, 20 Feb., 1900

SCOTT, HAROLD H. S., 94 Hope street, Glasgow, 20 Mar., 1906
SERVICE, GEORGE WILLIAM, 175 West George street, Glasgow, 24 Nov., 1896
SERVICE, WILLIAM, 54 Gordon street, Glasgow, 23 Jan., 1900
SLOAN, WILLIAM, 53 Bothwell street, Glasgow, 20 Feb., 1900
†SMITH, GEORGE, c/o Messrs George Smith & Sons, 75 Bothwell street, Glasgow, 22 Jan., 1901
SMITH, JOHN, 41 Kelvinside gardens, Kelvinside, N., Glasgow, 22 Feb., 1898
SOTHERN, ROBERT M., 59 Bridge street, Glasgow, 18 Feb., 1902
STEWART, CHARLES R., Messrs J. Stone & Co., 46 Gordon street, Glasgow, 29 Oct., 1901
STEWART, DONALD, 85 Cadogan street, Glasgow, 23 Oct., 1906
STEWART JOHN G., 65 Great Clyde street, Glasgow, 18 Dec., 1890
STRACHAN, G., Fairfield works, Govan, 26 Oct., 1891

TAYLOR, FRANK, 38 Wavendon avenue, Chiswick, London, W.,	24 Dec., 1901
TAYLOR, WILLIAM GILCHRIST, 123 Hope street, Glasgow,	23 Jan., 1900
THOMSON, WILLIAM H., 32 Albert Road East, Crosshill, Glasgow,	19 Feb., 1901
WARREN, ROBERT G., 116 Hope street, Glasgow,	28 Jan., 1896
WEIR, ANDREW, 102 Hope street, Glasgow,	25 Jan., 1898
WHIMSTER, THOMAS, 67 West Nile street, Glasgow,	24 Oct., 1899
WILD, CHARLES WILLIAM, Broughton Copper Company, Limited, 49-51 Oswald street, Glasgow,	24 Mar., 1896
WILLIAMSON, JOHN, 99 Great Clyde street, Glasgow,	28 Apr., 1903
WILLOCK, FREDERICK GEORGE, 109 Hope street, Glasgow,	21 Mar., 1905
WITHERS, WILLIAM E., 8 Harrington street, Liverpool,	23 Oct, 1903
WREDE, FREDERICK LEAR, 25 Bentinck street, Greenock,	25 Jan., 1898
YOUNG, JOHN D., Scottish Boiler Insurance Company, 111 Union street, Glasgow,	19 Dec., 1882
YOUNG, ROBERT, Baltic Chambers, 50 Wellington street, Glasgow,	16 Dec., 1902

STUDENTS.

AITKEN, JOHN, Beech cottage, Balshagray avenue, Partick, 28 Apr., 1903

ALEXANDER, ROBERT, 33 Melville street, Portobello, 23 Oct., 1900

ALEXANDER, WILLIAM, The Wellington Technical School, Wellington, N.Z., 19 Mar., 1901

ALEXANDER, WILLIAM, 13 Lawrence street, Partick, 25 Oct., 1904

ANDERSON, JOHN, Jun., c/o Stewart, 8 Ferry road, Dundee, 2 May, 1905

ANDREW, ARCHIBALD, 4 Thornwood terrace, Partick, 23 May, 1905

AOYAGI, J., c/o Mrs Sutherland, 1 West End Park street, Glasgow, 24 Oct., 1905

Ap.-GRIFFITH, YWAIN GORONWY, c/o Logan, 128 Byres road, Glasgow, 3 Mar., 1903

APPLEBY, JOHN HERBERT, 133 Balshagray avenue, Partick, 27 Oct., 1903

APPLETON, EVELYN, Rosevale, Windsor road, Renfrew, 20 Dec., 1904

BAIRD, JAMES, Romiley, Erskine avenue, Dumbreck, 26 Jan., 1904

BARKER, CLAUDE W. J., 14 Park circus, Westland drive, Whiteinch, Glasgow, 18 Dec., 1906

BARTY, THOMAS PATRICK WILLIAM, c/o Messrs. Formans & M'Coll, 160 Hope street, Glasgow, 18 Dec., 1900

BELL, H. L. RONALD, 3 Caird drive, Partick, 22 Mar., 1904

BINLEY, WILLIAM, Jun., 504, 73rd street, Brooklyn, New York, U.S.A., 21 Mar., 1899

BISSET, JOHN, 35 Harriet street, Pollokshaws, Glasgow, 18 Dec., 1900

BLACK, JAMES, 40 Seedhill road, Paisley, 18 Dec., 1900

BONE, QUINTIN GEORGE, 19 Dec., 1899

BOWDEN, JAMES K., Camphill house, Langside, Glasgow, 22 Jan., 1907

BROWN, ALEXANDER TAYLOR, 1 Broomhill avenue, Partick, 26 Oct., 1897

BROWN, ANDREW, 7 Whittingehame gardens, Glasgow, 21 Nov., 1905

BROWN, MATTHEW, c/o Irrawaddy Flotilla Co., Rangoon, Burmah, 22 Jan., 1907

BROWN WALTER GEORGE, 35 Burnbank gardens, Glasgow, 2 May, 1905

BRUCE, WILLIAM ROSS, Oakles, Hawkhead road, Paisley, 19 Dec., 1905

BUCHANAN, JOHN S., 2 Smithfield terrace, Cambuslang, 22 Jan., 1907

BUCHANAN, JOSHUA MILLER, 25 Hickman road, Penarth, Cardiff, 21 Nov., 1899

BUNTEN, JAMES C., Anderston Foundry, Glasgow, 20 Nov., 1900

CALLANDER, WILLIAM, 24 Dec., 1901

CAMERON, CHARLES, c/o Mr Todd, 8 Ward road., Shanghai, China, 25 Oct., 1904

CAMERON, IVAN JOHNSTONE, P.O. Box 365, Nelson, British Columbia, 24 Jan , 1905

CLARK, WILLIAM W., 32 Grafton square, Glasgow, 20 Dec., 1904

CLOVER, MAT., Jun., Roselea, Willaston, near Chester, 22 Dec., 1903

COCHRANE, JOHN, 15 Ure place, Montrose street, Glasgow, 24 Dec., 1901

CORMACK, JAMES ALEXANDER, B.Sc., The College, Imperial Railway of North China, Tong Shan, Tientsin, China, 24 Nov., 1903

CRAN. J. DUNCAN, 11 Brunswick street, Edinburgh, 21 Jan., 1902

CRAWFORD, ARCHIBALD, P.O. Box 558, Pretoria, S.A., 18 Dec, 1900

CRICHTON, JAMES, B.Sc., c/o Hunter, 308 Byres road, Glasgow, 22 Mar., 1904

CRIGHTON, ARTHUR EDWARD. 21 Mar., 1905

CROMBIE, JOHN WALLACE, c/o Mrs Hampton, 40 Nithsdale drive, Pollokshields, Glasgow, 19 Dec., 1905

CUBIE, ALEXANDER, Jun., 2 Newhall terrace, Glasgow, 23 Jan., 1900

CUTHBERT, JAMES G., 25 Torr road, Penge, London, S.E , 21 Nov., 1899

DARE, GEORGE E., 37 Melville street, Pollokshields, Glasgow, 22 Jan., 1907

DENNISTOUN, A. B., Glenesk, Sherbrooke avenue, Pollokshields, Glasgow, 1 May, 1906

DE SOLA, JUAN GARCIA, Sacramento, 57, Cadiz, Spain, 20 Mar., 1900

DEWAR, ROBERT D., 4 Craigendoran avenue, Helensburgh, 21 Mar., 1905

DIAS, CHRISTOPHER, Warri, Central Province, Lagos, West Africa, 16 Dec., 1902

DIXON, ERNEST M., Evenly cottage, Duntocher road, Dalmuir, 1 May, 1906

DORNAN, JAMES, 21 Minerva street, Glasgow, 20 Jan., 1903

DRYSDALE, WILLIAM, 3 Whittingehame gardens, Kelvinside, Glasgow, 16 Dec., 1902

DUFF, GORDON ALISON, B.Sc., 20 Park road, West Kirby, Cheshire, 24 Oct., 1905

DUNCAN, JOHN S., 9 Balgray terrace, Springburn, Glasgow, 22 Jan., 1907

DUNLOP, JOHN S., Whitmuir Hall, Selkirk, N.B., 21 Mar., 1905

DUNSMUIR, GEORGE, Matheran, 27 Sherbrooke avenue, Pollokshields, Glasgow, 21 Apr., 1903

DYKES, JAMES CLAUD, c/o Renwick, 3 Park drive, South, Whiteinch, Glasgow, 19 Mar., 1907

ELLIOTT, JAMES, 89 North street, Whiteinch, 1 May, 1906
ESDON, DOUGLAS S., c/o White, 16 Brighton place, Copland road, Govan, 23 Apr., 1907

FAIRLEY, JOHN, 124 Pitt street, Glasgow, 21 Nov., 1899
FERGUSON, DUNCAN JAMES, Croft en Righ, Renfrew, 19 Mar., 1907
FERGUSON, JOHN, 20 Dec., 1904
FERGUSON, PETER, Jun., Croft en Righ, Renfrew, 19 Mar., 1907
FERGUSSON, W. L., 48 Connaught road, Roath, Cardiff, 22 Dec., 1891
FISH, N., 69 Mayfair avenue, Ilford, Essex, 18 Feb., 1902
FLEMING, ARCHIBALD L, c/o Rankin, 280 Bath street, Glasgow, 20 Dec., 1904
FORGAN, HARRY P., c/o Dean, 15 Highburgh road, Dowanhill, Glasgow, 18 Dec. 1906
FRASER, JOHN ALEXANDER, 939 Govan road, Govan, 26 Jan., 1904
FREER, ROBERT M'DONALD, 27 Oct., 1903

GALBRAITH, HUGH, 20 Dec., 1898
GARDNER, HAROLD THORNBY, Thorncliffe, Skermorlie, 26 Apr., 1904
GEMMELL, DAVID, 34 Carmichael place, Langside, Glasgow, 22 Jan., 1907
GIBB, JOHN, 17 Thornwood drive, Partick, 24 Jan., 1899
GRAHAM, JOHN, 16 Summerfield cottages, Whiteinch, Glasgow, 26 Apr., 1904
GREIG, ROBERT A., 69 Exeter drive, Partick, 19 Feb., 1907
GRANGE, GEORGE ROCHFORT, 3 Lennox avenue, Scotstoun, Glasgow, 20 Feb., 1906
GRENIER, JOSEPH R., c/o Smith, 25 St. Vincent crescent, Glasgow, 3 Mar., 1903

HALLEY, MATTHEW WHITE, Messrs Mower & Co., Ltd., Rangoon, 22 Mar., 1904
HALKET, JAMES PITCAIRN, Jun., 47 Park drive, S. Whiteinch, Glasgow. 21 Nov., 1905
HANNAH, JOHN A., c/o Park, 288 New City road, Glasgow, 26 Nov., 1901
HARMAN, FREDERICK B. B., 19 Balmoral crescent, Crosshill, Glasgow, 20 Nov., 1906
HENNINGSEN, SVEND, Charlotsenborg, Copenhagen, Denmark, 21 Nov., 1905
HENRICSON, JOHN A., c/o A. B. Sandoikens, Skeppsdocka, och Mek, Varkstad, Helsingfors, Finland, 19 Dec., 1899

HERSCHEL, A. E. H., Mayfield, Bearsden, 19 Dec., 1899
HILL, GERARD LEADER, 4 Thornwood terrace, Partick, 19 Dec., 1905
HODGART, MATTHEW, Linnsburn, Paisley, 22 Dec., 1903
HOLLAND, HENRY NORMAN, South Wales Electric Power Co., Treforest, Pontypridd, 22 Nov., 1898
HOTCHKIS, MONTGOMERY H., Newlands Tea Estate, Kumargram, Duar, P.O., Jalpaigure, India, 24 Dec., 1901
HOUSTON, DAVID S, 83 Kilmarnock road, Shawlands, Glasgow, 27 Oct., 1903
HOWIE, JOHN, 110 Camperdown road, Scotstoun, Glasgow, 25 Oct., 1904
HOYT, CHARLES S., B.A., 22 Mar., 1904
HUTTON, W. R., 97 Queensborough gardens, Hyndland, Glasgow, 23 Apr., 1901

IRONS, JAMES HAY, 67 Norham street, Crossmyloof, Glasgow, 19 Feb., 1901

JANKINS, GARNET E., 3 May, 1904
JOHNSTON, HECTOR, c/o Campbell, 4 Roxburgh street, Hillhead, Glasgow, 22 Dec., 1903
JONES, NOEL, 204 Langsland road, Govan, 20 Feb., 1906
JONES, WILLIAM ARTHUR, Earleseat, Scotstounhill, Glasgow, 19 Mar., 1907

KELSO, JOHN N., 10 Highburgh terrace, Dowanhill, Glasgow, 22 Jan., 1907
KIMURA, N., Marine Inspector's Office, H.I.J.M.'s Consulate-General, Shanghai, 23 Apr., 1901
KINGHORN, DAVID RICHARD, Ardoch, Prenton, Cheshire, 23 Oct., 1900
KINLEY, WILLIAM, L., c/o Heaton, 11 Alexandra street, Partick, 23 Jan., 1906
KINROSS, CECIL GIBSON, 25 Katharine drive, Govan, 22 Dec., 1903
KIRBY, WILLIAM HUBERT TATE, c/o Mrs Barrie, 21 Endsleigh gardens, Partickhill road, Glasgow, 26 Apr., 1904
KIRKLAND, JAMES, 217 St. Andrew's road, Pollokshields, Glasgow, 20 Mar., 1906

LEMON, ERNEST J. H., c/o Mrs Robertson, Lochgorm cottage, Millburn road, Inverness, 20 Dec., 1904
LIETKE, JOHN O., Jun., Glenelg, Kilmacolm, 18 Dec., 1906
LINKLATER, VALDEMAR M'LELLAND, 20 Netherby road, Trinity, Edinburgh, 21 Nov., 1905

LINWOOD, CHARLES, 1 Clarence drive, Hyndland, Glasgow, 20 Mar., 1906
LLOYD, HERBERT J., Brecon road, Builth, Wells, 21 Dec., 1897
LOCHHEAD, JAMES M'CULLOCH, Brenfield, Scotstounhill, Glasgow, 25 Oct., 1904
LOPEZ, J., Odiel 28, Huelva, Spain, 20 Mar., 1906
LOW, ARCHIBALD N., Dunlea, Partickhill, Glasgow, 20 Dec., 1904

MCARTHUR, WILLIAM, 438 Dumbarton road, Partick, 22 Jan., 1907
M'AULAY, ALEX., 1 Leven Grove terrace, Dumbarton, 20 Dec., 1904
MACBRAYNE, HUGH CLARK, 19 Brisbane street, Greenock, 22 Jan., 1907
M'CARTNEY, HUGH NEIL, 12 Agamemnon street, Dalmuir, 20 Mar., 1906
M'CLELLAND, HAROLD R., 3 Caird drive, Partick, 22 Mar., 1904
M'CLURE, WILLIAM, 48 Claremont street, Glasgow, 20 Dec., 1904
M'CRACKEN, WILLIAM, York street, Parnell, Auckland, New Zealand, 27 Oct., 1903
M'DONALD, CLAUDE KNOX, Lennoxvale, Maryland drive, Craigton, Glasgow, 22 Mar., 1904
MACDONALD, PETER, 10 Wellington street, Greenock, 19 Mar., 1907
M'FARLANE, JOHN K., 20 Kelvinside gardens, N., Glasgow, 20 Dec., 1904
M'GENN, HENRY HAMILTON, 46 Claremont street, Glasgow, W. 21 Mar., 1905
M'GREGOR, ROBERT, 22 Westminster terrace, Sauchiehall street, Glasgow, 25 Oct., 1904
MACGIBBON, JOHN, Glenorchy, Scotstounhill, Glasgow, 23 Jan., 1906
M'HARG, W. S., The Grove, Ibrox, Glasgow, 19 Mar., 1901
M'KEAN, JAMES, B.Sc., 3 Buchanan terrace, Paisley, 22 Dec., 1903
M'KEAN, JOHN G., c/o Miss Hair, 17 Ocean view, Whitley Bay, Northumberland, 23 Oct., 1900
MACKENZIE, JAMES GIBSON, c/o Stewart, 9 Kelvingrove street, Glasgow, 18 Dec., 1906
MACKENZIE, KENNETH, B.Eng., c/o Stewart, 9 Kelvingrove street, Glasgow, 18 Dec., 1906
M'LACHLAN, CHARLES ALEX., Kia-Ora, Bogton avenue, Cathcart, Glasgow, 21 Apr., 1903
M'LACHLAN, DAVID FARMER, 10 St. Albans terrace, Dowanhill, Glasgow, 24 Oct., 1905
M'LAURIN, JAMES H., 34 Park circus, Ayr, 18 Dec., 1900
M'LAY, J. A., 17 Feb., 1903
MACLEAN, GAVIN THOMSON, 100 Springkell avenue, Maxwell park, Glasgow, 20 Mar., 1906
M'MILLAN, DUNCAN, 183 Paisley road west, Glasgow, 27 Oct., 1903

M'MILLAN, DUNCAN MURRAY, Millbrae, Milngavie, 2 May, 1905
MACNICOLL, DONALD, 25 Katherine drive, Govan, 23 Apr., 1901
MCPHERSON, DOUGAL C., c/o Black, 32 Shand street, Wishaw, 19 Feb., 1907
M'WHIRTER, ANTHONY C., 214 Holm street, Glasgow, 21 Dec., 1897

MAKGILL, ARTHUR, 220 Langsland road, S. Govan, 23 Jan., 1906
MARSHALL, ALEXANDER, Brightons, Polmont station, 18 Mar., 1902
MAITLAND, JOHN M., 13 Rosslyn terrace, Glasgow, 22 Jan., 1901
MANN, JOHN KENNEDY, 37 Partickhill road, Glasgow, 20 Mar., 1906
MELVILLE, ALEXANDER, c/o Messrs J. A. Millen & Somerville, King street, Tradeston, Glasgow, 20 Feb., 1900
MERCER, JOHN, c/o Matheson, 7 Fairlie park drive, Partick, 22 Oct., 1895
MILLAR, ALEX. SPENCE, c/o Greenock and Grangemouth Dockyard Co., Ltd., Grangemouth, 16 Dec., 1902
MILLER, DAVID C., 28 White street, Partick, 24 Oct., 1905
MILLIKEN, GEORGE, Milton house, Callander, 18 Feb., 1902
MITCHELL, JOHN MACFARLAN, 2 Wilton mansions, Glasgow, 25 Oct., 1904
MORE, THOMAS, 350 Allison street, Crosshill, Glasgow, 24 Jan., 1905
MORISON, THOMAS, 23 St. Andrew's drive, Pollokshields, Glasgow, 21 Nov., 1899
MORLEY, JAMES STEEL, 4 Gloag place, West Calder, 20 Feb., 1900
MORTIMER, JAMES B., 5 Ross street, Paisley, 23 Apr., 1907
MORTON, W. REID, 2 Fountainville avenue, Belfast, 26 Oct., 1897
MOYELL, ROBERT, Elsinore Shipyard Co., Ltd., Elsinore, Denmark, 18 Dec., 1906
MUIR, JAMES H., Prospecthill, Gourock, 26 Jan., 1892
MUNGALL, DAVID, 24 Millbrae crescent, Langside, Glasgow, 22 Jan., 1907
MUNRO, GEORGE W., 12 Rothesay gardens, Partick, 24 Jan., 1905
MUNRO, HARRY JAMES, Westgate, Friockheim, Forfarshire, 18 Dec., 1906
MURRAY, ANGUS ROBERTSON, Strathroy, Dumbreck, 23 Jan., 1906
NEIL, ROBERT, 89 Carmichael place, Langside, Glasgow, 20 Mar., 1900
NEILL, JOHN, B.Sc., c/o Messrs Scotts' S. & E. Co., Ltd., Engine works, Greenock, 18 Dec., 1906
NIVEN, JOHN, 19 Woodrow road, Pollokshields, Glasgow, 22 Nov., 1898

ORMISTON, JAMES SIMON, 18 Percy street, Paisley road, Glasgow, 24 Oct., 1905
O'SULLIVAN, ANTHONY, 54 Daisy street, Govanhill, Glasgow, 23 May, 1905

PARR, FREDRIK, 169A London road, Leicester, 22 Mar., 1904
PATERSON, A. STANLEY, Maryville, Bearsden, 24 Jan., 1905
PATERSON, JOSEPH BARR, c/o Henry, 38 White street, Partick, 22 Mar., 1898
PATON, THOMAS, 5 Binnie street, Gourock, 20 Dec., 1892
POLLARD HENRY, 10 Clarence street, Paisley, 19 Dec., 1905
PRITCHARD, JOHN LLOYD, Redargan, Drumoyne drive, So. Govan, 18 Dec., 1906

REID, HENRY P., 103 Queensborough gardens, Glasgow, 20 Dec., 1898
RENWICK, ROBERT, 6 Balgray terrace, Springburn, Glasgow, 22 Jan., 1907
RICHMOND, TOM, 71 Kintore road, Newlands, Glasgow, 20 Feb., 1900
ROBERTSON, THOMAS ALSTON, 46 Queen's drive, Crosshill, Glasgow, 20 Feb., 1906
ROGERS, GEORGE, St. Leonard's, Kilmacolm, 18 Dec., 1906
ROTHWELL, JAMES E., 2 Florentine Place, Hillhead, Glasgow, 24 Oct., 1905
ROWE, HAROLD KINGDON, 268 Kenmure street, Pollokshields, Glasgow, 18 Dec., 1906
RUNCIE, GIRVAN HAMILTON, 39 Cecil street, Hillhead, Glasgow, 18 Dec., 1906
RUSSELL, THOMAS, Kilkerran, Greenock road, Paisley, 19 Dec., 1905

SADLER, JOHN, Collindale works, Hendon, London, N.W., 23 Oct., 1900
SCHERFFENBERG-MÖLLER SIGURD, c/o Reid, 19 Havelock street, Partick, 18 Dec., 1906
SCHOETENSACK, FREDERICK F., 47 Scott street, Garnethill, Glasgow, 22 Jan., 1907
SELLERS, FREDERICK W. B., 26 Apr., 1904
SEMPLE, JOHN SCOTT, 25 Marjorie Grove, North Side, Clapham Common, London, S.W., 26 Apr., 1904
SLACK, CHARLES, 22 Carmichael street, Govan, 22 Jan., 1907
SHARP, CHARLES, 13 Albert street, Alexandria, 22 Jan., 1907
SHEARDOWN, HAROLD E., c/o Mrs Cowrie, 4 Highburgh road, Dowanhill, Glasgow, 20 Dec., 1904
SMITH, ALEXANDER, 77 High street, Kinghorn, 24 Dec., 1901
SMITH, CHARLES, 3 Rosemount terrace, Ibrox, Glasgow, 24 Apr., 1894
SMITH, JAMES, 44 Cleveland street, Glasgow, 31 Oct., 1902
SMITH, JAMES, Jun., 118 Ladybarn road, Fallowfield, Manchester, 27 Oct., 1903
SMITH, WILLIAM, Shanghai Dock and Engineering Co., Shanghai, 28 Apr., 1903

SPENCE, JAMES, Jun., 21 Burnbank gardens, Glasgow,	20 Dec., 1904
SPIERS, ERNEST J., 76 Stepney green, London, E.,	20 Dec., 1904
SPROUL, JOHN, Glenairlie, Glasgow road, Paisley,	3 Mar., 1903
STEVENSON, ALLAN, 165 Kenmure street, Pollokshields, Glasgow,	26 Nov., 1901
SUTHERLAND, ALEX., 12 Regent park terrace, Strathbungo, Glasgow,	24 Jan., 1905
SUTHERLAND, HUGH CAMPBELL, 171 North Bedley st., Springburn, Glasgow,	18 Dec., 1906
SWANSON, GEORGE C., Norwood, St. George's road, Glasgow,	19 Feb., 1907
TAYLOR, ANDREW P., 18 Deneview, Wallsend-on-Tyne,	19 Dec., 1899
TAYLOR, JOHN DOUGLAS, Jeanieslea, Oxhill road, Dumbarton,	26 Apr., 1904
TEMPLETON, JOHN C., c/o Owen Ryan, Esq., Burmah Oil Co., Allanmyo, Burmah,	22 Jan., 1907
TENNENT, WILLIAM WHALEY, 155 Hyndland road, Kelvinside, Glasgow,	21 Nov., 1905
THOMAS, NEVILL SENIOR, Priory, Penarth,	24 Mar., 1903
THOMSON, JOHN A., British Linen Bank house, Langholm,	20 Dec., 1904
THOMSON, THOMAS, Jun., B.A., B.Sc. (Lond.), 15 Doune terrace, Kelvinside, N., Glasgow,	18 Dec., 1906
TOD, WILLIAM, 948 Sauchiehall street, Glasgow,	22 Feb., 1898
VARSILION, JOHN, 268 Whitehill street, Dennistown, Glasgow,	18 Dec., 1907
VICK, HENRY HAMPTON,	25 Oct., 1904
WADDELL, ROBERT, 19 Kelvinside terrace, S., Glasgow,	20 Dec., 1904
WARD, RICHARD J. L., Grafton terrace, Bentinck street, Greenock,	20 Mar., 1906
WATSON, JAMES,	24 Dec., 1901
WHADCOAT, HENRY CECIL, c/o Mrs Rowe, 268 Kenmure street, Pollokshields, Glasgow,	24 Oct., 1905
WHITEHEAD, JOHN, B.Sc., Howford, Mansewood, Pollokshaws, Glasgow,	21 Nov., 1905
WILLETT, EDWARD V. A., 68 Lauderdale gardens, Hyndland, Glasgow,	19 Dec., 1905
WILLIAMSON, GEORGE TAYLOR, Craigbarnet, Greenock,	22 Mar., 1904
WILLIAMSON, EDWARD H., "Linthouse," Linden avenue, Blundellsands, Liverpool,	27 Oct., 1903
WILSON, THOMAS, 12 Barrington drive, Glasgow,	20 Feb., 1900

WILSON, ROWAND, 3 Cecil street, Ibrox, Glasgow,	25 Oct., 1904
WITHY, VIVIAN, Kenmore, Bowling Green terrace, Whiteinch, Glasgow,	31 Oct., 1902
WORK, JOHN C.,	22 Mar., 1904
YOUNG, ALFRED LISTON, Kilkerran, Newlands road, Newlands, Glasgow,	23 Apr., 1907
YOUNG, GEORGE M., B.Sc., 49 Melville street, Pollokshields, Glasgow,	24 Dec., 1901
YOUNG, JAMES M., Auldfield place, Pollokshaws, Glasgow,	22 Jan., 1901
YOUNG, J. M., Ravenscraig, Ardrossan,	17 Feb., 1903

INDEX.

	PAGE
Address by President,	1
Aitken, Thomas, Memoir of,	448
Anniversary Dinner, "James Watt,"	380, 397
Annual Report of Council,	391, 404
Annual Subscriptions,	426
Articles of Association,	xi.
Associate Members, List of,	487
Associates, Deceased,	448
Associates, List of,	496
Auxiliary Machinery,	40
Awards of Books,	392, 402
Balance Sheet,	416
Bell, Imrie, Memoir of,	428
Belt Drives,	199
Bird, John R., Memoir of,	429
Blowers, Turbo,	24
Board of Governors of Glasgow and West of Scotland Technical College,	408
Board of Governors of Glasgow School of Art,	409
Board of Trade Consultative Committee,	409
Books Added to the Library by Purchase,	419
Brock, Walter, Memoir of,	430
Brown, Andrew, Memoir of,	432
Bye-Laws,	xxix.
Cables,	346
Carburettor,	370
Chain Drives,	234
Cockburn, George, Memoir of,	436
Collectors,	341
Committee on Education and Training of Engineers,	411
Conduit System, Electric Tramways,	342
Contents,	v.
Conversazione,	386

PAGE

Copland, Sir William Robertson, Memoir of, - - - - - 437

Correspondence on Papers—

Mr John Barr—Suction Gas Engines and Gas Plants, 147.—Com. Frank Brandt—The Stability of Submarines, 192.—Dr. Max Breslauer—The Mechanism of Power Transmission from Electric Motors, 267.—Mr Archibald Gilchrist—The Most Economical Mean Effective Pressure for Steam Engines, 302.—Mr. W. W. Lackie—The Mechanism of Power Transmission from Eectric Motors, 265.—Mr Michael Longridge—The Most Economical Mean Effective Pressure for Steam Engines, 303.—Mr C. A. Matthey—The Most Economical Mean Effective Pressure for Steam Engines, 305.—Mr H. L. S. Nicol—The Steam Turbine in Land and Marine Work, 69.—Mr J. J. O'Neill—The Steam Turbine in Land and Marine Work, 66.—Mr J. Macewan Ross—The Mechanism of Power Transmission from Electric Motors, 268.—Capt. H. Riall Sankey—The Most Economical Mean Effective Pressure for Steam Engines, 312.—Mr. W Sisson—The Most Economical Mean Effective Pressure for Steam Engines, 316.—Mr C. H. Wingfield—The Most Economical Mean Effective Pressure for Steam Engines, 311.—Mr A. Scott Younger—The Steam Turbine in Land and Marine Work, 72.

Cost of Different Systems of Electric Traction, - - - - - 358

Cost of Running under Electric Traction, - - - - - - 356

Cost of Working Gas Plant, - - - - - - - - - - 84

Council Report, - - - - - - - - - - - - - 404

Current and Speed on Gradients, - - - - - - - 339

Deceased Members, - - - - - - - - - - - - 428

Development of Steam Turbines, - - - - - - - - - 18

Discussion on Papers—

Mr William Alexander—Suction Gas Engines and Gas Plants, 131.—Mr James Andrews—The Most Economical Mean Effective Pressure for Steam Engines, 295.—Mr John Barr—Suction Gas Engines and Gas Plants, 147; The Mechanism of Power Transmission from Electric Motors, 260.—Mr R. A. Bruce—The Mechanism of Power Transmission from Electric Motors, 252.—Mr Alexander Cleg-

PAGE

horn—The Most Economical Mean Effective Pressure for Steam Engines, 293.—Mr James Craig—The Steam Turbine in Land and Marine Work, 57.—Mr George T. Duncan—Suction Gas Engines and Gas Plants, 133.—Lieut. M. Heggstad—The Stability of Submarines, 186.—Mr. Percy A. Hillhouse—The Stability of Submarines, 183.—Mr W. B. Hird—The Mechanism of Power Transmission from Electric Motors, 249.—Mr. J. R. Jack—The Stability of Submarines, 189.—Prof. Andrew Jamieson—The Steam Turbine in Land and Marine Work, 58; Suction Gas Engines and Gas Plants, 124.—Mr. A. H. Kelsall—The Mechanism of Power Transmission from Electric Motors, 261.—Mr James Lowe—Suction Gas Engines and Gas Plants, 128.—Mr Richard A. McLaren—Suction Gas Engines and Gas Plants, 124; The Mechanism of Power Transmission from Electric Motors, 258.—Mr Henry A. Mavor—The Mechanism of Power Transmission from Electric Motors, 248.—Mr Andrew May—Suction Gas Engines and Gas Plants, 119.—Dr. A. L. Mellanby—The Steam Turbine in Land and Marine Work, 50; The Most Economical Mean Effective Pressure for Steam Engines, 291.—Mr R. T. Napier—The Steam Turbine in Land and Marine Work, 62; Suction Gas Engines and Gas Plants, 139; The Mechanism of Power Transmission from Electric Motors, 262.—Mr F. J. Rowan—The Steam Turbine in Land and Marine Work, 56; Suction Gas Engines and Gas Plants, 110.—Mr Robert Royds—The Steam Turbine in Land and Marine Work, 63; Suction Gas Engines and Gas Plants, 132.—Mr John A. Rudd—The Most Economical Mean Effective Pressure for Steam Engines, 301.—Mr C. Randolph Smith—The Steam Turbine in Land and Marine Work, 64—Mr Andrew Sproul—The Mechanism of Power Transmission from Electric Motors, 262.—Mr Thomas Turner—Suction Gas Engines and Gas Plants, 137.—Mr. Robert Watson—Suction Gas Engines and Gas Plants, 121.—Mr Reginald J. N. Willcox—Suction Gas Engines and Gas Plants, 139.—Mr Alexander Wilson—Suction Gas Engines and Gas Plants, 117.

Diving Type of Submarine Boat, - - - - - - - - - 165

Dobson, William, Memoir of, - - - - - - - - - - 438

PAGE

Donations to the Library, - - - - - - - - - - 418
Doyle, Patrick, Memoir of, - - - - - - - - - 439
Drives, Belt, etc., - - - - - - - - - - - 199

Economy and Efficiency of Turbines, - - - - - - - 38
Election of Office-Bearers, - - - - - - - - - - 402
Electric Railways, Third Rail, - - - - - - - - 348
Electric Traction Motor, - - - - - - - - - - 336
Electric Traction Single-Phase, - - - - - - - - 353
Electric Traction Three-Phase, - - - - - - - - 351
Electric Tramways, Conduit System, - - - - - - - 342
Engine Tests, - - - - - - - - - - - - 279
Exhibition of Models, - - - - - - - - - - 386

Fans, Turbo, - - - - - - - - - - - - - 24
Flexible Shaft Drives, - - - - - - - - - - 210

Gas Engines, Developments in, - - - - - - - - - 98
Gas Engines, Governing, - - - - - - - - - - 104
Gas Plants, Objection to use of Suction, - - - - - - - 96
Gas Turbines, - - - - - - - - - - - - 42
Gearing, Ernest George, Memoir of, - - - - - - - - 440
Generators, Turbo, - - - - - - - - - - - 21
Govan, Alexander, Memoir of, - - - - - - - - - 441
Governor for Motor Car, - - - - - - - - - 367

Honorary Members, List of, - - - - - - - - - - 450
Horse Power, - - - - - - - - - - - - 335

Ideal Motor, - - - - - - - - - - - - - 16
Idler Wheel Drives, - - - - - - - - - - - 222
Ignition, - - - - - - - - - - - - - 373
Index, - - - - - - - - - - - - - - 509
Indicator Diagrams, - - - - - - - - - - - 377
Institution, New Buildings, - - - - - - - - 10, 407

"James Watt" Anniversary Dinner, - - - - - - 380, 397

Kinghorn, William Alexander, Memoir of, - - - - - - 449

Land Turbines, - - - - - - - - - - - - - 18
Laying Memorial Stone of New Buildings, - - - - - - 387
Libraries, etc., which receive the Institution's Transactions, - - 422
Library, Books Added to by Purchase, - - - - - - - 419

PAGE

Library Committee, Report of, - - - - - - - - 418
,, Donations to, - - - - - - - - - - 418
,, Periodicals Received at, - - - - - - - - 424
List of Members, - - - - - - - - - - - - 450
Lloyd's Technical Committee, - - - - - - - - - 411
Lubricator, - - - - - - - - - - - - - 364

Marine Turbines, - - - - - - - - - - - - 29
Meetings of the Institution, - - - - - - - - - 405
Members, Associate, List of, - - - - - - - - - 487
,, Deceased, - - - - - - - - - - - 428
,, List of, - - - - - - - - - - - - 450
Memorandum of Association, - - - - - - - - - ix.
Memorial Stone of New Buildings, - - - - - - - - 387
Minutes of Proceedings, - - - - - - - - - - 391
Motor Cars, - - - - - - - - - - - - - 362
,, Electric Traction, - - - - - - - - - - 336
,, Ideal, - - - - - - - - - - - - - 16
Motors, Single-Phase, - - - - - - - - - - - 353
Multiple Screws, - - - - - - - - - - - - 39
,, Unit Control, - - - - - - - - - - - 348
Murray, James, Memoir of, - - - - - - - - - - 442

New Books Added to Library, - - - - - - - - - 418
New Buildings for the Institution, - - - - - - - 10, 407
New Buildings, Laying Memorial Stone of, - - - - - - 387

Obituary, - - - - - - - - - - - - - - 428
Objections to Use of Suction Gas Plants, - - - - - - 96
Office-Bearers, Election of, - - - - - - - - - - 402

Periodicals Received at Library, - - - - - - - - 424
Permanent Way, Tramway, - - - - - - - - - - 343
Planetary Gears, - - - - - - - - - - - 229
Premiums of Books, - - - - - - - - - - - 392
President's Address, - - - - - - - - - - - 1
Presidents of the Institution, - - - - - - - - - iv.
Proceedings, Minutes of, - - - - - - - - - - 391
Propellers, Multiple, - - - - - - - - - - - 39
Pumps, Turbo, - - - - - - - - - - - - 26

Rail Bonding, - - - - - - - - - - - - - 344

PAGE

Rait, Henry M., Memoir of, - - - - - - - - - - 443
Ramsay, John C., Memoir of, - - - - - - - - - - 449
Reducing Gears, Self-Contained, - - - - - - - - - 228
Regenerative Control, - - - - - - - - - - - 339
Reid, Robert S., Memoir of, - - - - - - - - - - 444
Report of Council, - - - - - - - - - - 391, 404
,, of the Library Committee, - - - - - - - - - 418
Robson, Hazelton Robson, Memoir of, - - - - - - - - 444
Roll of the Institution, - - - - - - - - - - - 404
Rolling Stock, - - - - - - - - - - - - - 345
Rowan, James, Memoir of, - - - - - - - - - - 445

Self Contained Reducing Gears, - - - - - - - - - 228
Series Parallel Control, - - - - - - - - - - - 346
Simple Engines, - - - - - - - - - - - - - 286
Single-Phase Control, - - - - - - - - - - - 355
,, Distribution, - - - - - - - - - - 356
,, Motors, - - - - - - - - - - - 353
,, Overhead Construction, - - - - - - - - 354
Smith, James Alexander, Memoir of, - - - - - - - - 446
Smoking Concert, - - - - - - - - - - - - - 386
Societies Exchanging Transactions with the Institution, - - 422
Some Details of Albion Motor Cars—by Mr T. Blackwood Murray, B.Sc., - - - - - - - - - - - 362
Spring Drive, - - - - - - - - - - - - - 363
Lubricator, - - - - - - - - - - - - - 364
Governor, - - - - - - - - - - - - - 367
Carburettor, - - - - - - - - - - - - - 370
Ignition, - - - - - - - - - - - - - 373
Indicator Diagrams, - - - - - - - - - - - 377
Speed-Time Curves, - - - - - - - - - - - - 333
Spur Wheel Drives, - - - - - - - - - - - - 216
Stability of Motion, - - - - - - - - - - - - 174
,, Statical - - - - - - - - - - - 169
,, of Submarines, - - - - - - - - - - 164
Steam Propulsion, - - - - - - - - - - - - 6
Steamship Development, - - - - - - - - - - - 8
Stevenson, George, Memoir of, - - - - - - - - - 448
Student, Deceased, - - - - - - - - - - - 449
Students' Section, - - - - - - - - - - - - 406
Subscriptions, Annual, - - - - - - - - - - - 426
Suction Gas Engines and Gas Plants—by Mr Hugh Campbell, - 82
Comparative Costs of Working, - - - - - - - - 84

PAGE

Standby Losses, - - - - - - - - - - 90
Water Consumption, - - - - - - - - - 92
Repairs and Renewals, - - - - - - - - - 92
Objections to use of Suction Gas Plants, - - - - - 96
Developments in Design and Construction of Gas Engines, - 98
Systems of Governing in Gas Engines, - - - - - 104
Discussion, - - - - - - - - - - - 110
Surface Contact System, Tramways, - - - - - - - - 345
Systems of Distribution, - - - - - - - - - - 350

The Development and Present Status of the Steam Turbine in Land and Marine Work—by Mr E. M. Speakman, - - 12
Thermodynamic Conversion - - - - - - - - 12
The Ideal Motor, - - - - - - - - - - 16
Development of Steam Turbines on Land, - - - - 18
Turbo Generators, - - - - - - - - - 21
Turbo Fans and Blowers, - - - - - - - - 24
Turbo Pumps, - - - - - - - - - - 26
Exhaust Steam Turbines, - - - - - - - - 28
Marine Turbines in the Royal Navy, - - - - - - 29
Marine Turbines in Merchant Service, - - - - - 31
Measurement of Power Developed, - - - - - - 34
Relative Economy and Efficiency, - - - - - - 38
Multiple Screws, - - - - - - - - - - 39
Auxiliary Machinery, - - - - - - - - - 40
Gas Turbines, - - - - - - - - - - 42
Conclusion, - - - - - - - - - - 43
Discussion, - - - - - - - - - - 50
The Education and Training of Engineers, - - - - - 411
The Mechanism of Power Transmission from Electric Motors—by Mr Wilfrid L. Spence, - - - - - - 197
Belt Drives, - - - - - - - - - - 199
Direct Coupled Drives, - - - - - - - - 204
Flexible Shaft Drives, - - - - - - - - 210
Direct Coupled Vertical Shaft Drives, - - - - - 211
Spur Wheel Drives, - - - - - - - - 216
Idler Wheel Drives, - - - - - - - - 222
Self Contained Reducing Gears, - - - - - 228
Planetary Gears, - - - - - - - - 229
Chain Drives, - - - - - - - - - 234
Worm Gear Drives, - - - - - - - - 239
Variable Speed Drives, - - - - - - - - 243
Summary, - - - - - - - - - - 245
Discussion, - - - - - - - - - - 248
The Most Economical Mean Effective Pressure for Steam Engines—by Mr R. Royds, M.Sc., - - - - - 278

PAGE

Engine Tests, - - - - - - - - - - - - 279
Single Cylinder, or Simple Engines, - - - - - - - 286
Summary of Conclusions, - - - - - - - - - 288
Discussion, - - - - - - - - - - - - 290
The Stability of Submarines—by Mr J. G. JOHNSTONE, B.Sc., - 164
Features of the Diving Type, - - - - - - - - 165
Statical Stability, - - - - - - - - - - 169
Stability of Motion, - - - - - - - - - - 174
Discussion, - - - - - - - - - - - - 183
Three-Phase Electric Traction, - - - - - - - - - 351
Tramway and Railway Electric Traction—by Mr GEORGE G. BRAID, - - - - - - - - - - - - 333
Speed-Time Curves, - - - - - - - - - - 333
Horse Power Required, - - - - - - - - - - 335
The Electric Traction Motor, - - - - - - - - 336
Regenerative Control, - - - - - - - - - - 339
Current and Speed on Gradients, - - - - - - - 339
Cables, - - - - - - - - - - - - - 340
Collectors, - - - - - - - - - - - - 341
Electric Tramways, Conduit System, - - - - - - - 342
Tramway Permanent Way, - - - - - - - - 343
Rail Bonding, - - - - - - - - - - - 344
Surface Contact System, - - - - - - - - - 345
Rolling Stock, - - - - - - - - - - - 345
Series Parallel Control, - - - - - - - - - 346
Telephones, - - - - - - - - - - - - 347
Electric Railways, Third Rail, - - - - - - - - 348
Multiple Unit Control, - - - - - - - - - 348
Systems of Distribution, - - - - - - - - - 350
Three-Phase Electric Traction, - - - - - - - - 351
Single-Phase Electric Traction, - - - - - - - - 353
Single-Phase Motors, - - - - - - - - - - 353
Single-Phase Overhead Construction, - - - - - - 354
Single-Phase Control, - - - - - - - - - - 355
Single-Phase Distribution, - - - - - - - - - 356
Running Cost under Electric Traction, - - - - - - 356
General Conclusions, - - - - - - - - - - 357
Cost of Different Systems of Electric Traction, - - - - - 358
Treasurer's Statement, - - - - - - - - - - 414

Variable Speed Drives, - - - - - - - - - - 243
Vote of Thanks to President, - - - - - - - - - 11

Water Consumption, - - - - - - - - - - - 92
Watson, Robert, Memoir of, - - - - - - - - - 447
Worm Gear Drives, - - - - - - - - - - - 239

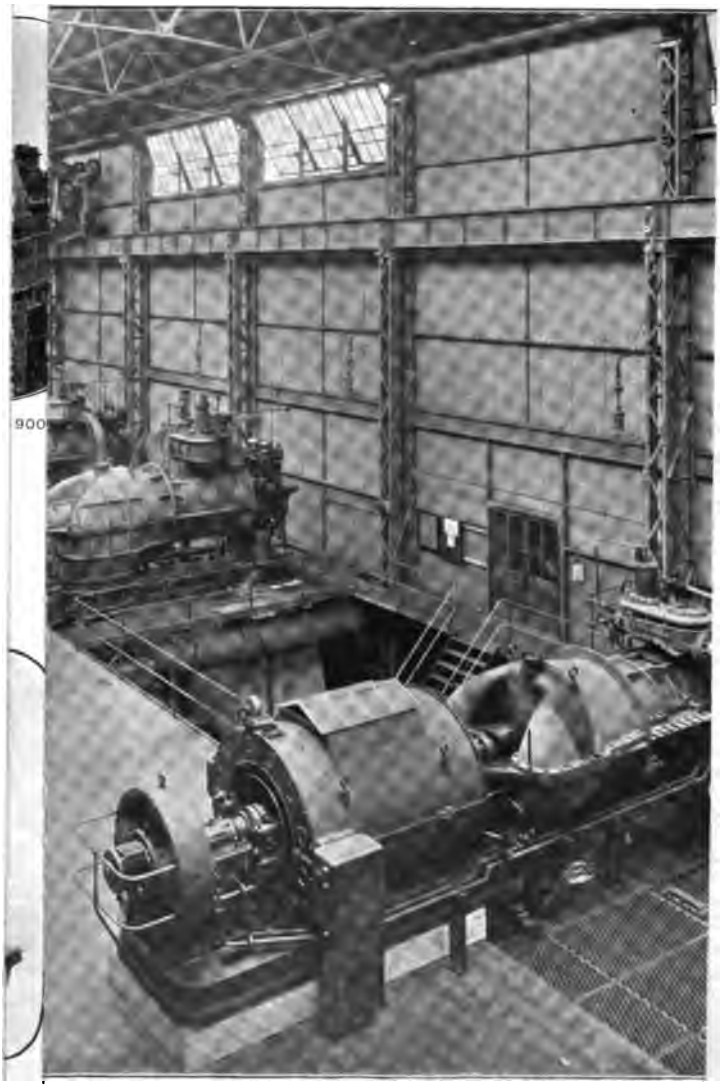

ASTLE-ON-TYNE (1903).

LEGGAT BROS.,
ENGINEERING LITHOGRAPHERS,
GLASGOW.

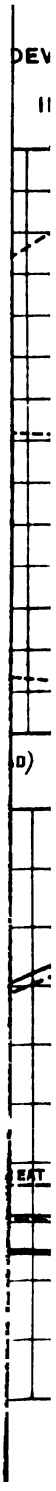
DEV
II
0)
EAT

Fig. 14.

STEAM TURBINE DRIVING THREE CENTRIFUGAL PUMPS SUPPLIED TO THE NEW SOUTH WALES GOVERNMENT.

Fig. 15.

TURBO CENTRIFUGAL PUMP THROWING A JET OF WATER TWO INCHES IN DIAMETER AT 100 LBS PRESSURE.

LEGGAT BROS.,
ENGINEERING LITHOGRAPHERS,
GLASGOW.

Fig. 22.

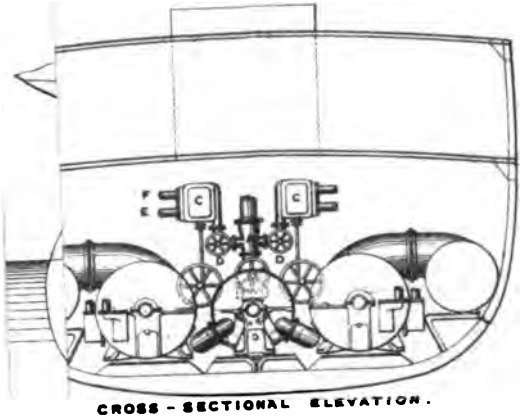

CROSS - SECTIONAL ELEVATION.

A *Thru*
B *Mai*
C *Man*

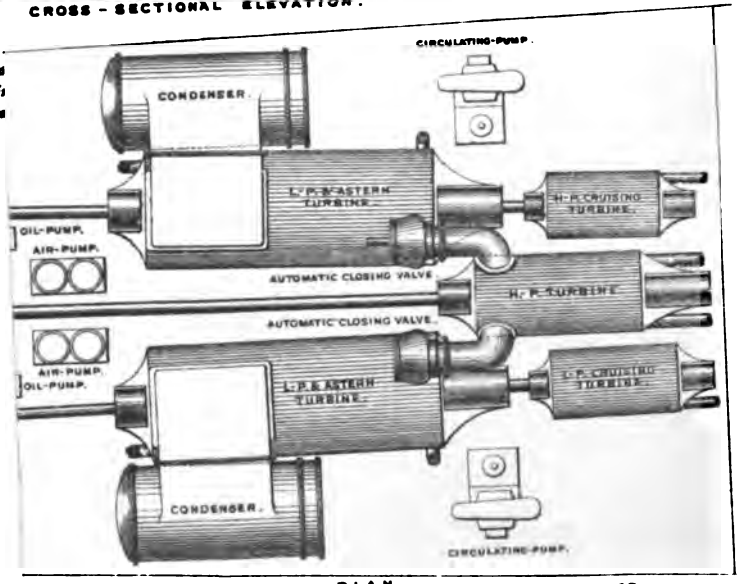

PLAN.

ARRANGEMENT OF TURBINE-MACHINERY FOR A CRUISER.

Fig. 23.

Fig. 29

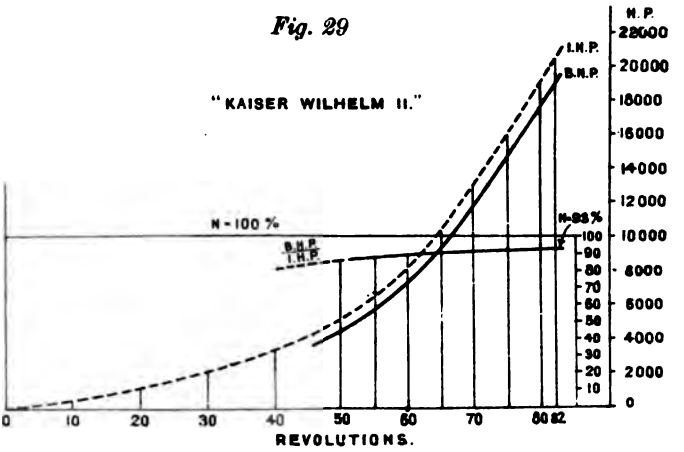

Fig. 30.

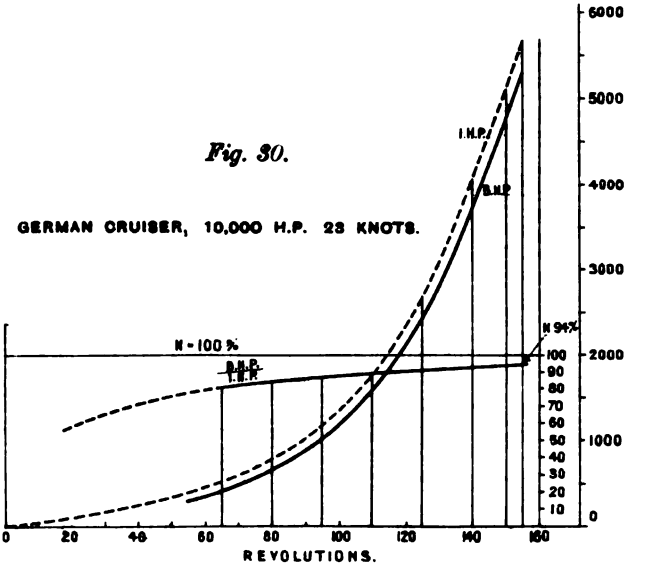

CURVES OF B.H.P. AND MECHANICAL EFFIENCY OBTAINED WITH FÖTTINGER TORSION INDICATOR.

Fig. 4.

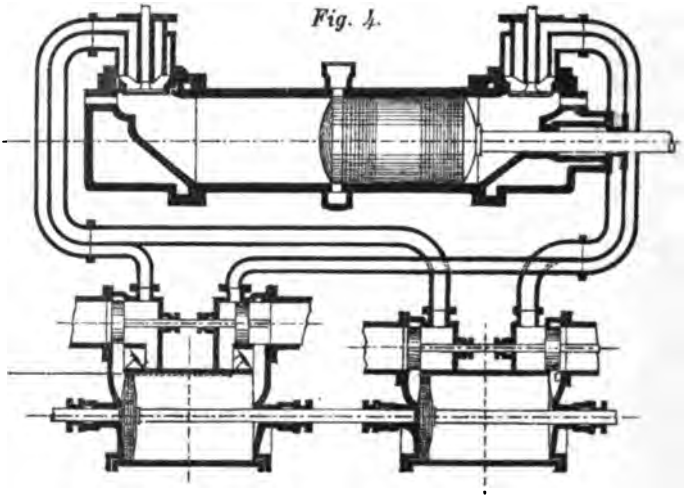

Fig. 8.

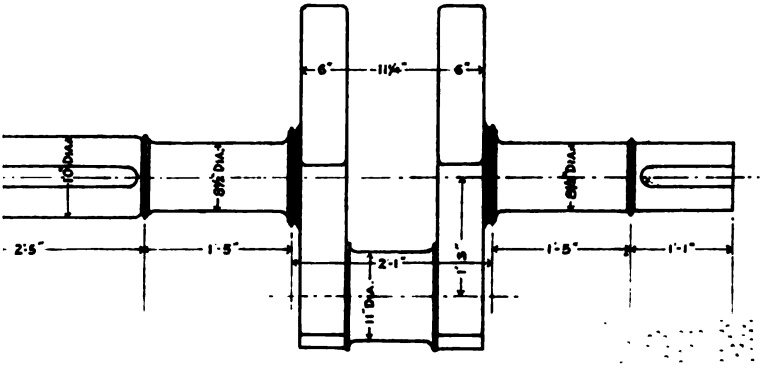

LEGGAT BROS.,
ENGINEERING LITHOGRAPHERS,
GLASGOW.

IGINES ANC

GAS

LIBRARY

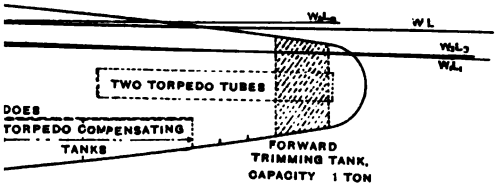

MARINE—DIVING TYPE

RANGEMENT SHEWING POSITIONS

ALSO WATERLINES CORRESPONDING

:RENT LIGHT CONDITIONS

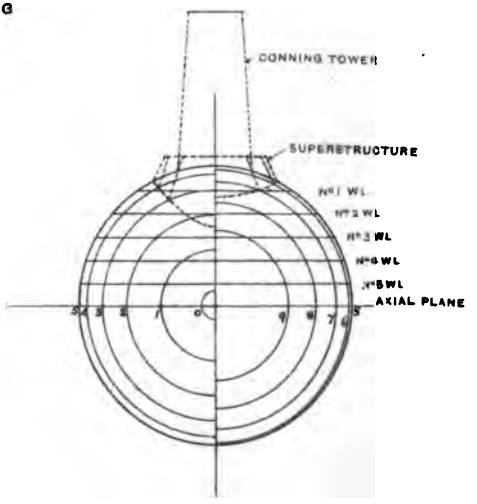

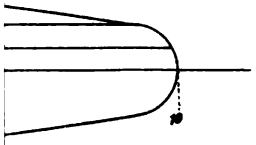

LINES.

SUBMARINE :—LENGTH = 128 FT.
DIAMETER = 13′ 6″

TOTAL SUBMERGED DISPLACEMENT = 310 TONS.

DISPLACEMENT OF SUPERSTRUCTURE = 11 TONS

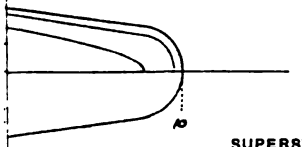

SUPERSTRUCTURE AND CONNING TOWER····· ·····DOTTED LINES

LEGGAT BROS.,
ENGINEERING LITHOGRAPHERS.
GLASGOW

HULL

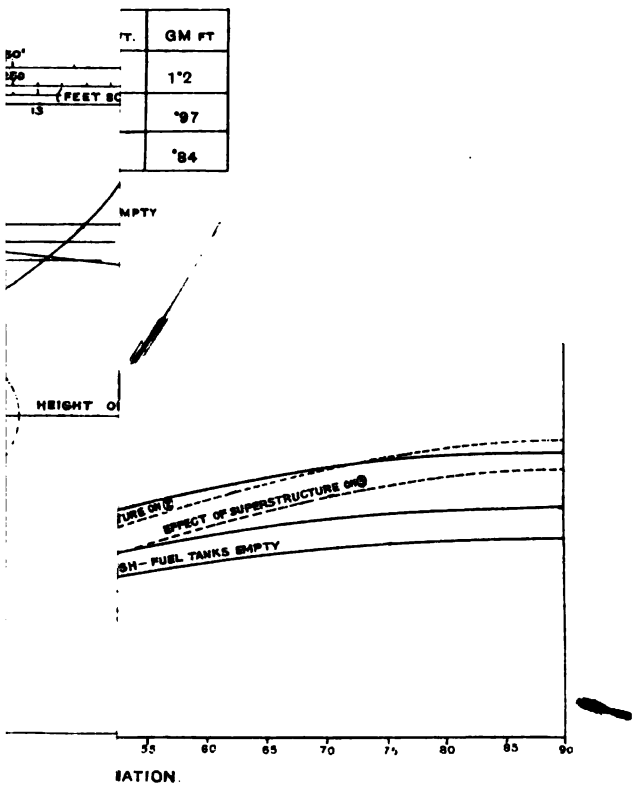

IATION.

LEGGAT BROS.,
ENGINEERING LITHOGRAPHERS.
GLASGOW

'ig: 128' TOTAL DISPLACEMENT = 310 TONS.

RUDDER AND RESERVE BUOYANCY NECESSARY FOR STEADY MOTION

SE AT A SPEED OF 8 KNOTS, THE VESSEL BEING INCLINED 3°

FROM 60 FEET FORD. OF B TO 60 FEET AFT OF B.

OF B.M. ORDINATES ARE VALUES OF α AND $(\Delta - W)$

Fig. 7.

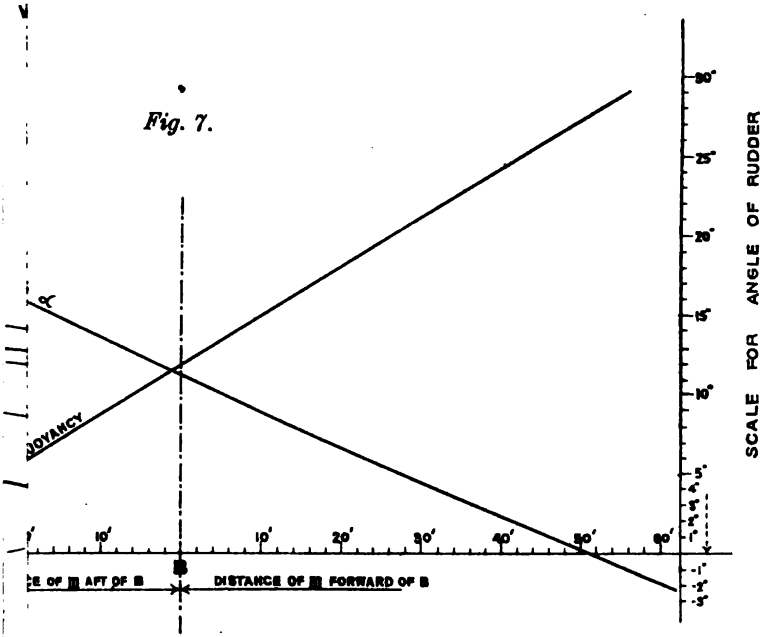

LEGGAT BROS.,
ENGINEERING LITHOGRAPHERS,
GLASGOW

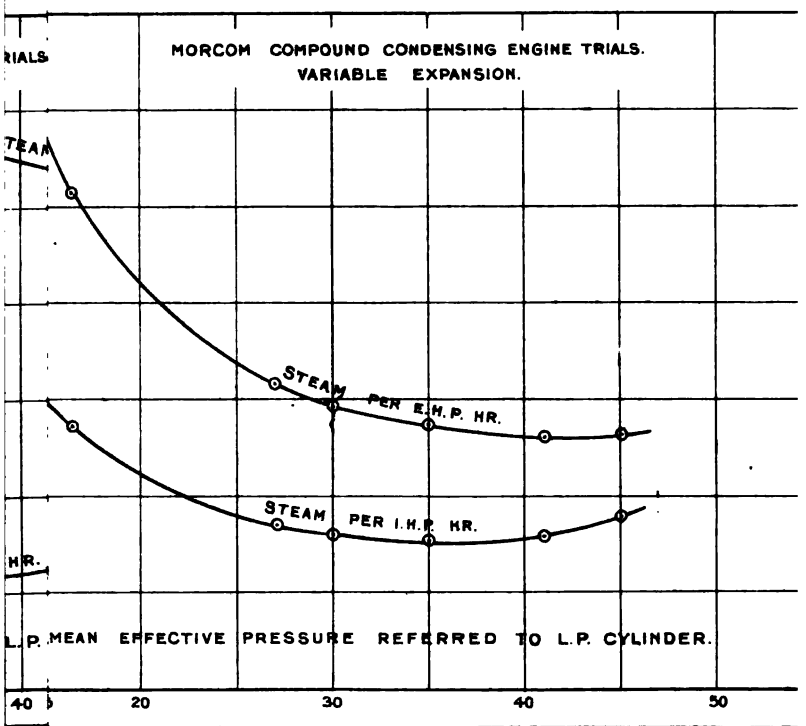
MORCOM COMPOUND CONDENSING ENGINE TRIALS.
VARIABLE EXPANSION.
STEAM PER E.H.P. HR.
STEAM PER I.H.P. HR.
L.P. MEAN EFFECTIVE PRESSURE REFERRED TO L.P. CYLINDER.
40
20
30
40
50

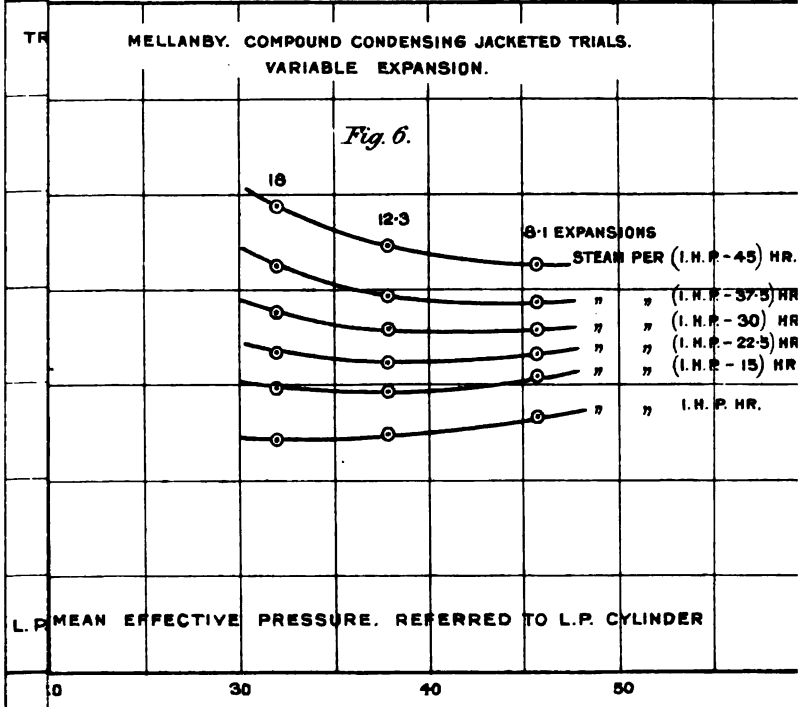
MELLANBY. COMPOUND CONDENSING JACKETED TRIALS.
VARIABLE EXPANSION.
Fig. 6.
18
12·3
8·1 EXPANSIONS
STEAM PER (I.H.P. - 45) HR.
(I.H.P. - 37·5) HR
(I.H.P. - 30) HR
(I.H.P. - 22·5) HR
(I.H.P. - 15) HR
I.H.P. HR.
L.P. MEAN EFFECTIVE PRESSURE. REFERRED TO L.P. CYLINDER
30
40
50

Fig. 9.

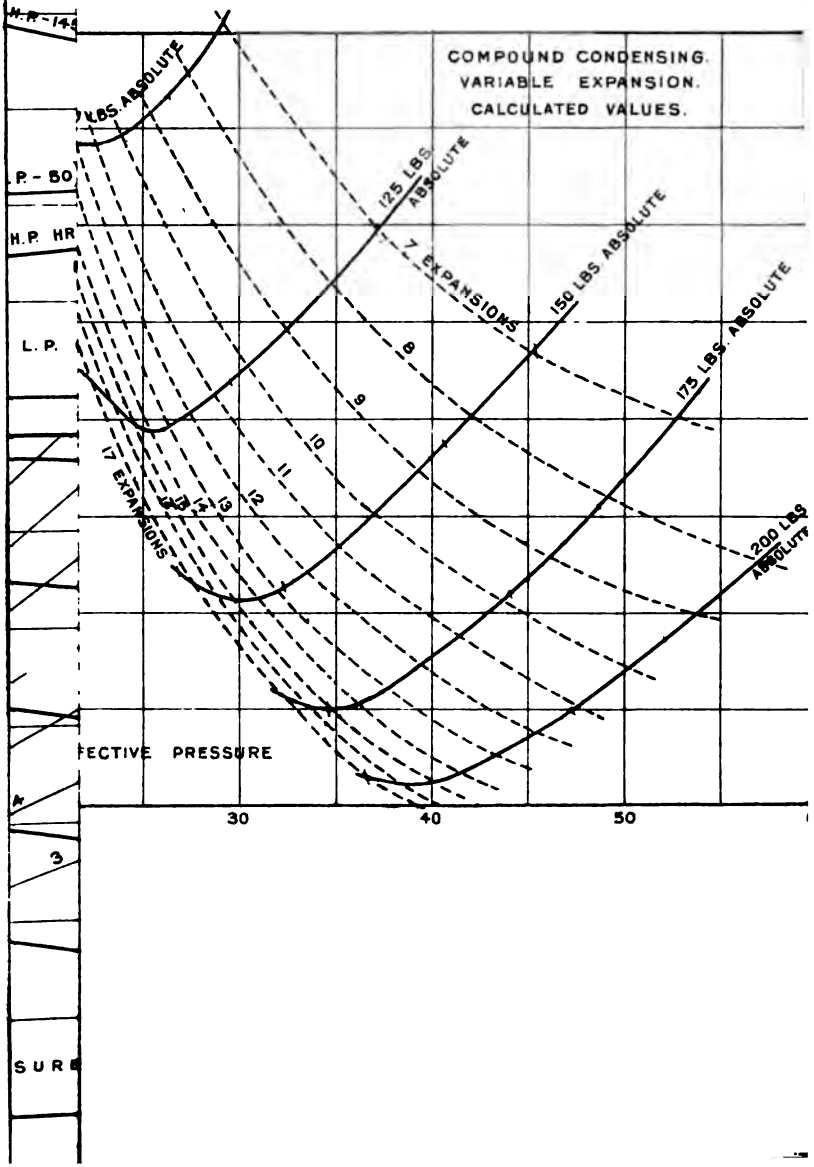
COMPOUND CONDENSING.
VARIABLE EXPANSION.
CALCULATED VALUES.
125 LBS. ABSOLUTE
150 LBS. ABSOLUTE
175 LBS. ABSOLUTE
200 LBS. ABSOLUTE
7 EXPANSIONS
8
9
10
11
12
13
14
17 EXPANSIONS
30
40
50

Fig. 14. *PLATE XIV.*

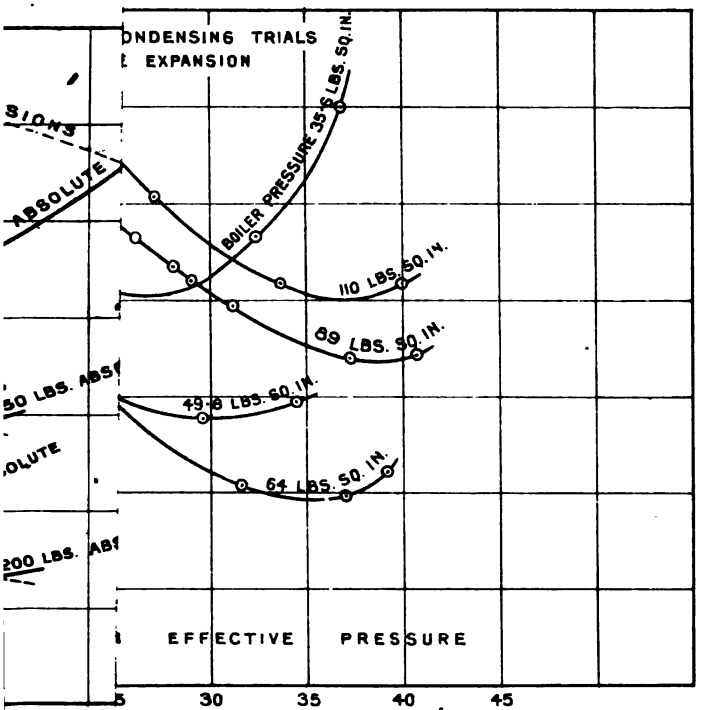

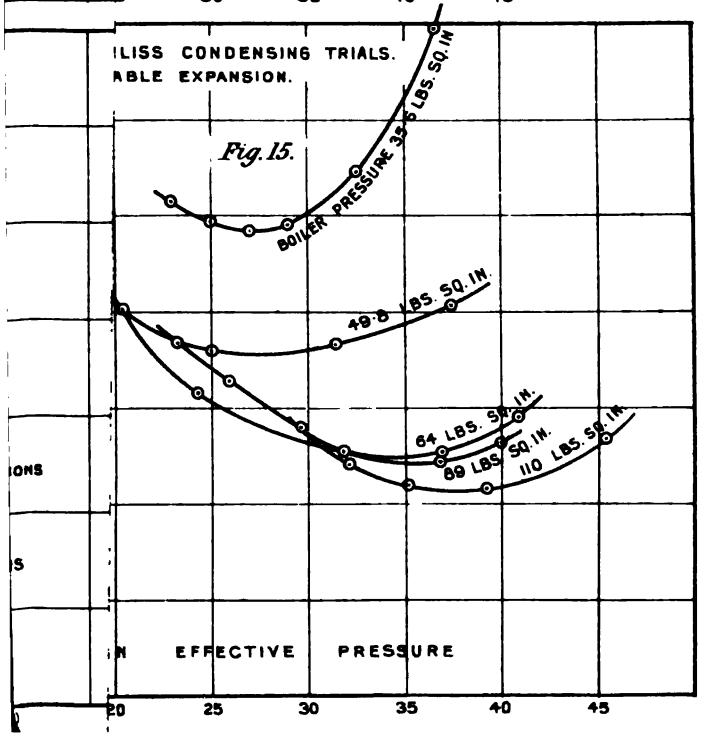

Fig. 15.

:AN E

INCH.

+ (P

PER S

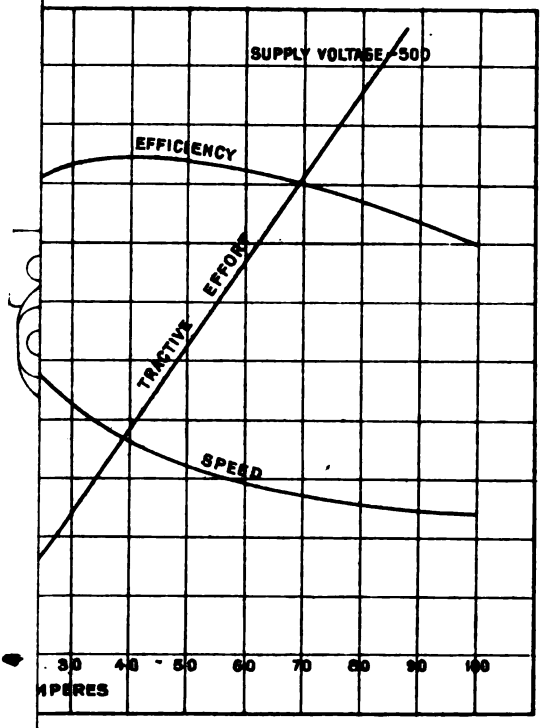

Fig. 3.

C CURVES OF 30 H P SERIES MOTOR.
30 INS. DIAMETER, GEAR RATIO=4·86.

Fig. 5.

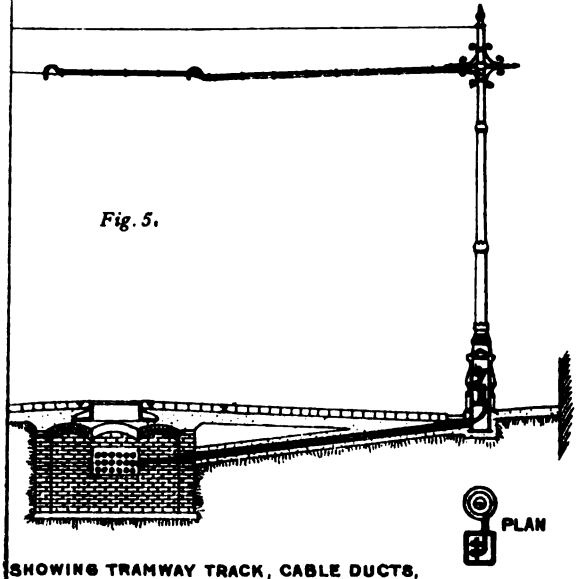

SHOWING TRAMWAY TRACK, CABLE DUCTS,
DE POLES, & OVERHEAD TROLLEY WIRES.

Fig 8.

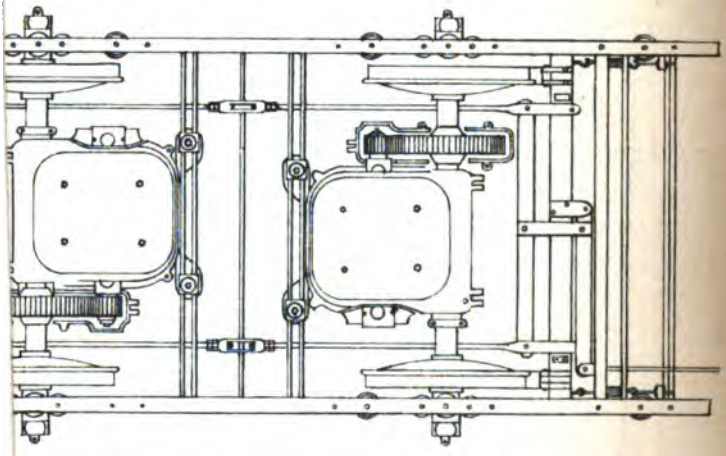

FOUR WHEEL TRUCK SHOWING MOTORS.

Fig. 11.

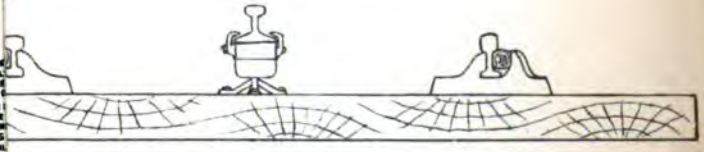

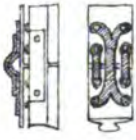

CONDUCTOR RAIL BONDS

N OF TRACK. METROPOLITAN RAILWAY.

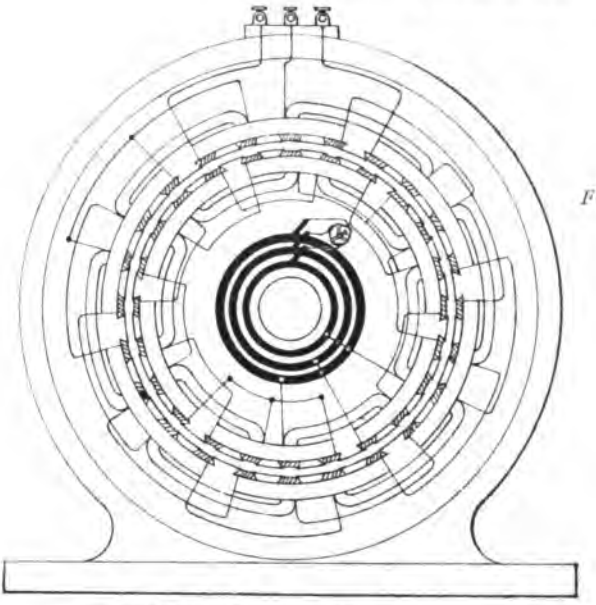

Fig. 13.

THREE-PHASE INDUCTION MOTOR.

Fig. 12.

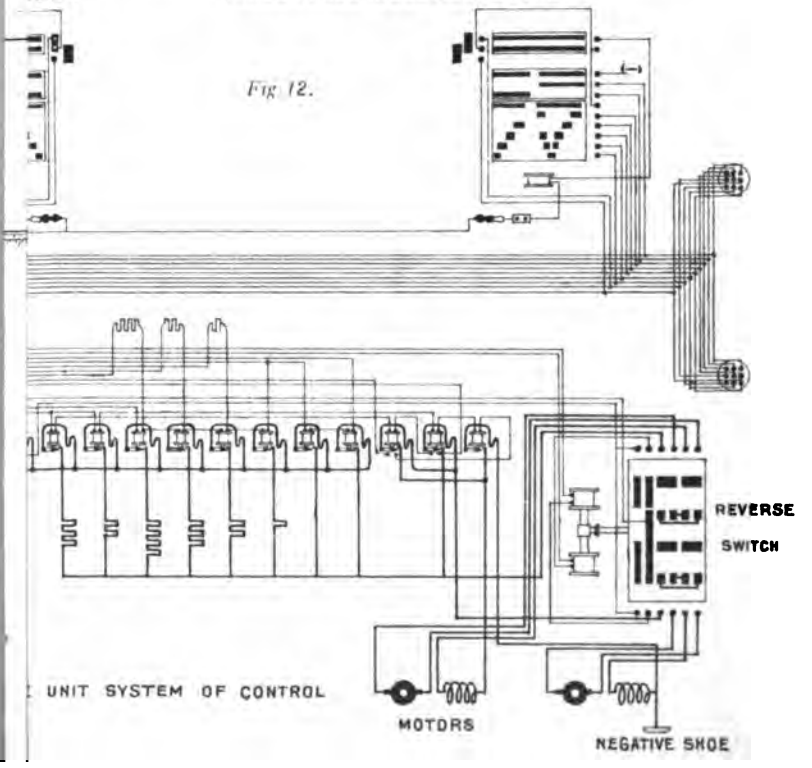

UNIT SYSTEM OF CONTROL

4. *Fig. 8.*

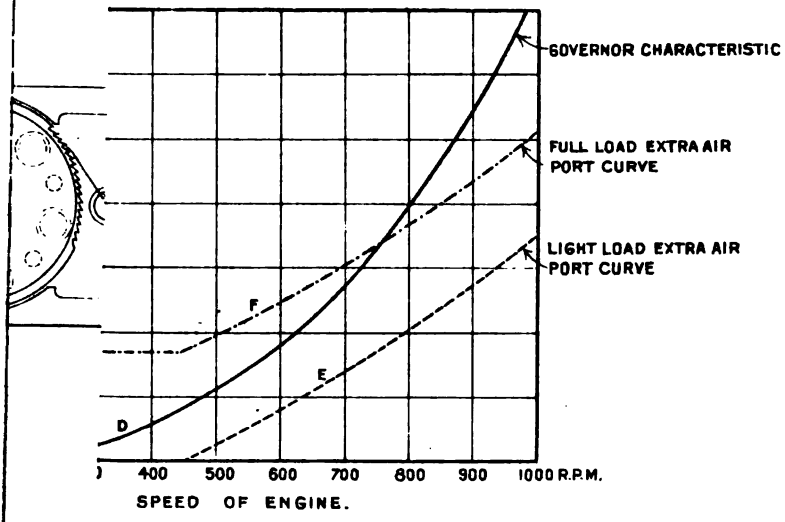

Fig. 11.

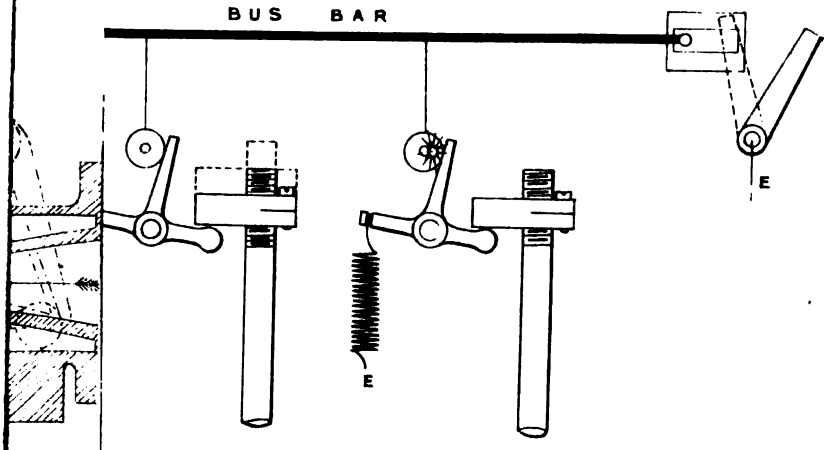

GNETO IGNITION SYSTEM
DIAGRAM OF CONNECTIONS.

Fig. 18.

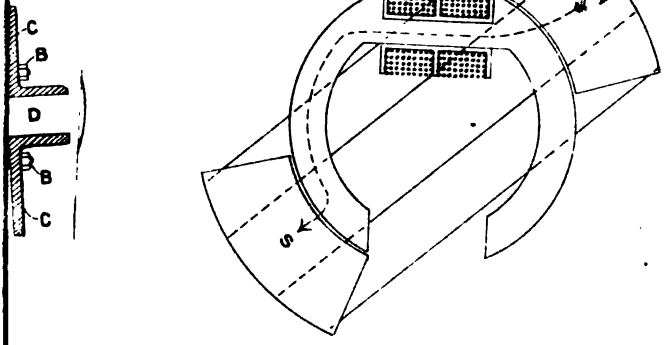

O.

B

C

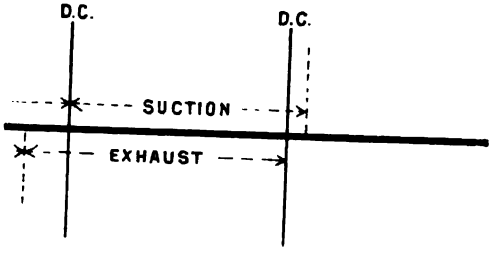

A

NE.

DO R.R.M.